Table of Contents

Grapple Buckets

Rock Buckets: SRB1566 SRB1572 SRB1578
Skeleton Buckets: SSB1566 SSB1578

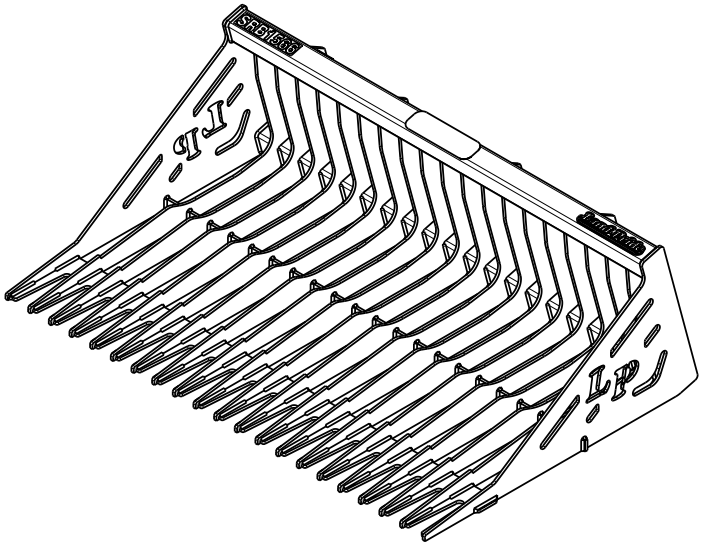

SRB15 Series Rock Buckets

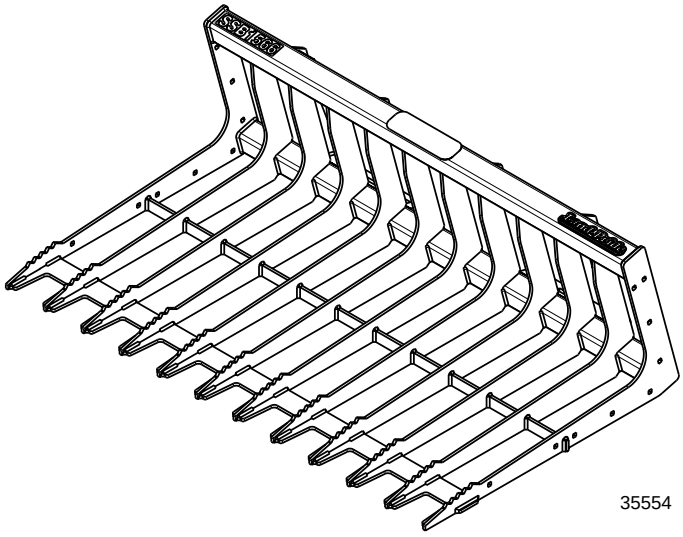

SSB15 Series Skeleton Buckets

380-101M
Operator's Manual

Read the Operator's Manual entirely. When you see this symbol, the subsequent instructions and warnings are serious - follow without exception. Your life and the lives of others depend on it!

Cover photo may show optional equipment not supplied with standard unit.

© Copyright 2014 *Printed* **12/18/14**

Important Safety Information 1
Safety at All Times 1
Look For The Safety Alert Symbol 1
Safety Labels 4
Introduction 5
Application 5
Using This Manual 5
Terminology 5
Definitions 5
Owner Assistance 5
Serial Number 5
Further Assistance 5
Section 1: Assembly & Set-Up 6
Skid Steer/Tractor Requirements 6
Torque Requirements 6
Before You Start 6
Uncrating Instructions 6
Assembly and Set-Up 6
Installation of SSB15 End Panels 6
Skid Steer & Tractor Hook-Up 7
Equipment Clearances 7
Section 2: Operating Procedures 8
Operating Checklist 8
General Inspection 8
Operating Safety 8
Transport Safety 9
Bucket Operation 10
Picking Up a Load 10
Traveling With a load 10
Dumping a Load 10
Unhooking the Bucket 10
General Operating Instructions 11
Section 3: Maintenance & Lubrication 12
Maintenance 12
Long Term Storage 12
Section 4: Specifications & Capacities 13
Section 5: Features & Benefits 14
Section 6: Troubleshooting 15
Section 7: Torque Values Chart 16
Section 8: Warranty 17

© Copyright 2014 All rights Reserved

Land Pride provides this publication "as is" without warranty of any kind, either expressed or implied. While every precaution has been taken in the preparation of this manual, Land Pride assumes no responsibility for errors or omissions. Neither is any liability assumed for damages resulting from the use of the information contained herein. Land Pride reserves the right to revise and improve its products as it sees fit. This publication describes the state of this product at the time of its publication, and may not reflect the product in the future.

Land Pride is a registered trademark.

All other brands and product names are trademarks or registered trademarks of their respective holders.

Printed in the United States of America.

These are common practices that may or may not be applicable to the products described in this manual.

Safety at All Times

Thoroughly read and understand the instructions given in this manual before operation. Refer to the "Safety Label" section, read all instructions noted on them.

Do not allow anyone to operate this equipment who has not fully read and comprehended this manual and who has not been properly trained in the safe operation of the equipment.

- ▲ The operator must not use drugs or alcohol as they can change the alertness or coordination of that person while operating equipment. The operator should, if taking over-the-counter drugs, seek medical advice on whether he/she can safely operate the equipment.
- ▲ Operator should be familiar with all functions of the unit.
- ▲ Make sure all guards and shields are in place and secured before operating implement.
- ▲ Start skid steer with steering levers and hydraulic controls in neutral.
- ▲ Keep all persons away from equipment and work area.
- ▲ Operate implement and loader arms from the driver's seat only.
- ▲ Dismounting from a moving unit can cause serious injury or death.
- ▲ Do not allow anyone to stand between skid steer/tractor and implement while hooking-up to implement.
- ▲ Keep hands, feet, and clothing away from power-driven parts.
- ▲ Watch out for objects overhead and along side such as fences, buildings, wires, trees, limbs, etc., while transporting and operating attached implement.
- ▲ Detach and store implement in an area where children normally do not play. Secure implement by using blocks and supports.

Look For The Safety Alert Symbol

The SAFETY ALERT SYMBOL indicates there is a potential hazard to personal safety involved and extra safety precaution must be taken. When you see this symbol, be alert and carefully read the message that follows it. In addition to design and configuration of equipment, hazard control, and accident prevention are dependent upon the awareness, concern, prudence, and proper training of personnel involved in the operation, transport, maintenance, and storage of equipment.

Be Aware of Signal Words

A Signal word designates a degree or level of hazard seriousness. The signal words are:

⚠ DANGER
Indicates an imminently hazardous situation which, if not avoided, will result in death or serious injury. This signal word is limited to the most extreme situations, typically for machine components that, for functional purposes, cannot be guarded.

⚠ WARNING
Indicates a potentially hazardous situation which, if not avoided, could result in death or serious injury, and includes hazards that are exposed when guards are removed. It may also be used to alert against unsafe practices.

⚠ CAUTION
Indicates a potentially hazardous situation which, if not avoided, may result in minor or moderate injury. It may also be used to alert against unsafe practices.

For Your Protection

- ▲ Thoroughly read and understand the "Safety Label" section, read all instructions noted on them.

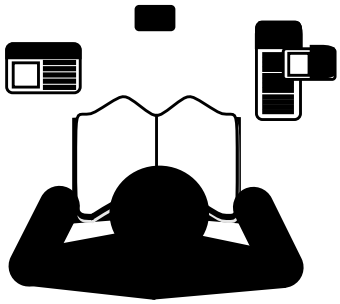

Avoid Underground Utilities

- ▲ **Dig Safe, Call 811.** Always contact your local utility companies (electrical, telephone, gas, water, sewer, and others) before digging so they may mark the location of any underground services in the area.
- ▲ Be sure to ask how close you can work to the marks they positioned.

Parts Manual QR Locator

The QR (Quick Reference) code on the cover and to the left will take you to the Parts Manual for this equipment. Download the appropriate App on your smart phone, open the App, point your phone on the QR code and take a picture.

Dealer QR Locator

The QR code on the left will link you to available dealers for Land Pride products. Refer to Parts Manual QR Locator on this page for detailed instructions.

These are common practices that may or may not be applicable to the products described in this manual.

Skid Steer Shutdown & Storage

Before leaving operator's seat:

- ▲ Lower lift arms and put attachment flat on the ground.
- ▲ Turn off engine.
- ▲ Engage parking brake.
- ▲ If included, raise seat bar and move controls until both lock.
- ▲ Remove key to preventv unauthorized starting.
- ▲ Use steps, grab-handles and skid-resistant surfaces when getting on and off the loader.
- ▲ Detach and store implements in an area where children normally do not play. Secure implement by using blocks and supports.

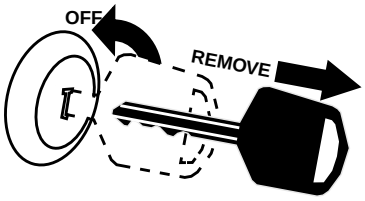

Transport Safely

- ▲ Comply with state and local laws.
- ▲ Use towing vehicle and trailer of adequate size and capacity. Secure equipment towed on a trailer with tie downs and chains.
- ▲ Sudden braking can cause a towed trailer to swerve and upset. Reduce speed if towed trailer is not equipped with brakes.
- ▲ Avoid contact with any over head utility lines or electrically charged conductors.
- ▲ Always drive with load on end of loader arms low to the ground.
- ▲ Always drive straight up and down ramps with load on "uphill" side of skid steer or tractor.
- ▲ Engage parking brake when stopped on an incline.
- ▲ Maximum transport speed for an attached implement is 20 mph. DO NOT EXCEED. Never travel at a speed which does not allow adequate control of steering and stopping. Some rough terrains require a slower speed.
- ▲ As a guideline, use the following maximum speed weight ratios for an attached implement:

  20 mph when weight of attached implement is less than or equal to the weight of machine towing the implement.

  10 mph when weight of attached implement exceeds weight of machine towing implement but not more than double the weight.
- ▲ **IMPORTANT:** Do not tow a load that is more than double the weight of the vehicle towing the load.

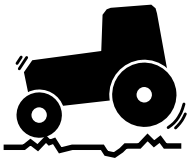

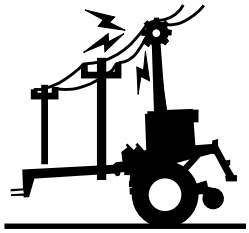

Tractor Shutdown & Storage

Before leaving operator's seat:

- ▲ If engaged, disengage PTO.
- ▲ Lower attached implement to ground or onto support blocks.
- ▲ Put tractor in park or set park brake, turn off engine, and remove switch key to prevent unauthorized starting.
- ▲ Wait for all components to come to a complete stop before leaving the operator's seat.
- ▲ Detach and store implement in an area where children normally do not play. Secure implement using blocks and supports.

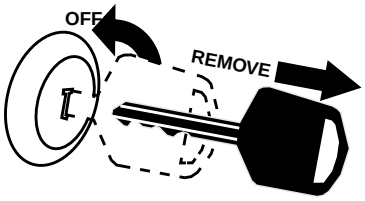

Practice Safe Maintenance

- ▲ Understand procedure before doing work. Use proper tools and equipment, refer to Operator's Manual for additional information.
- ▲ Work in a clean dry area.
- ▲ Lower attached implement to the ground and follow all shutdown procedures before leaving the operator's seat to perform maintenance.
- ▲ Allow implement to cool completely before working on it.
- ▲ Disconnect battery ground cable (-) before servicing or adjusting electrical systems or before welding on implement.
- ▲ Do not grease or oil implement while it is in operation.
- ▲ Inspect all parts. Make sure parts are in good condition & installed properly.
- ▲ Remove buildup of grease, oil, or debris.
- ▲ Remove all tools and unused parts from implement before operation.

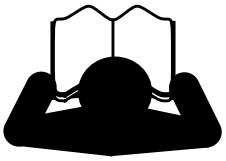

These are common practices that may or may not be applicable to the products described in this manual.

Prepare for Emergencies

- ▲ Be prepared if a fire starts.
- ▲ Keep a first aid kit and fire extinguisher handy.
- ▲ Keep emergency numbers for doctor, ambulance, hospital, and fire department near phone.

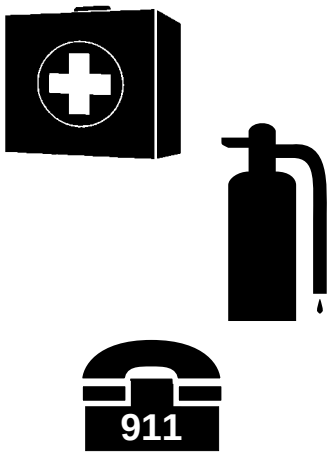

Wear Protective Equipment

- ▲ Wear protective clothing and equipment appropriate for the job. Clothing should be snug fitting without fringes and pull strings to avoid entanglement with moving parts.
- ▲ Prolonged exposure to loud noise can cause hearing impairment or hearing loss. Wear suitable hearing protection such as earmuffs or earplugs.
- ▲ Operating equipment safely requires the operator's full attention. Avoid wearing radio headphones while operating machinery.

Avoid High Pressure Fluids Hazard

- ▲ Escaping fluid under pressure can penetrate the skin causing serious injury.
- ▲ Avoid the hazard by relieving pressure before disconnecting hydraulic lines or performing work on the system.
- ▲ Make sure all hydraulic fluid connections are tight and all hydraulic hoses and lines are in good condition before applying pressure to the system.
- ▲ Use a piece of paper or cardboard, NOT BODY PARTS, to check for suspected leaks.
- ▲ Wear protective gloves and safety glasses or goggles when working with hydraulic systems.
- ▲ **DO NOT DELAY.** If an accident occurs, see a doctor familiar with this type of injury immediately. Any fluid injected into the skin or eyes must be treated within a few hours or gangrene may result.

Use Safety Lights and Devices

- ▲ Slow moving skid steers, tractor, self-propelled equipment, and towed implements can create a hazard when driven on public roads. They are difficult to see, especially at night.
- ▲ Flashing warning lights and turn signals are recommended whenever driving on public roads.

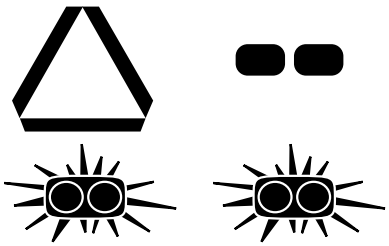

Keep Riders Off Machinery

- ▲ Never carry riders or use machinery as a personlift.
- ▲ Riders obstruct operator's view.
- ▲ Riders could be struck by foreign objects or thrown from the machine.
- ▲ Never allow children to operate equipment.

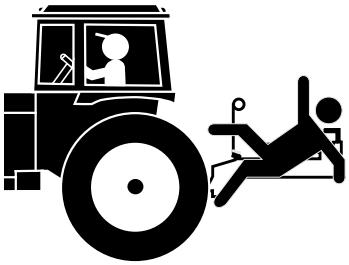

Use Seat Belt and ROPS

- ▲ Operate only tractors & skid steer loaders equipped with Roll-Over Protective Structure (ROPS) and seat belt.
- ▲ Fasten seat belt snugly and securely to help protect operator from being thrown, crushed, or severely injured if a rollover occurs; and from falling off the tractor or skid steer loader and being ran over. Not using the seat belt can result in serious injury or death.
- ▲ Wearing protective equipment such as safety shoes, safety glasses, hard hat, and ear plugs is highly recommended.

Safety Labels

Your Rock Bucket comes equipped with all safety labels in place. They were designed to help you safely operate your implement. Read and follow their directions.

1. *Keep all safety labels clean and legible.*
2. *Refer to this section for proper label placement. Replace all damaged or missing labels. Order new labels from your nearest Land Pride dealer. To find your nearest dealer, visit our dealer locator at www.landpride.com.*
3. *Some new equipment installed during repair requires safety labels to be affixed to the replaced component as specified by Land Pride. When ordering new components make sure the correct safety labels are included in the request.*
4. *Refer to this section for proper label placement.*
   To install new labels:
   a. *Clean the area the label is to be placed.*
   b. *Spray soapy water on the surface where the label is to be placed.*
   c. *Peel backing from label. Press firmly onto the surface.*
   a. *Squeeze out air bubbles with the edge of a credit card or with a similar type straight edge.*

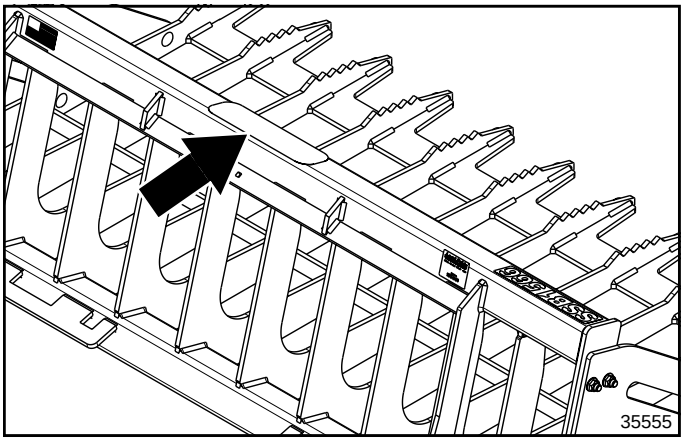

840-107C

Anti-slip pad

Land Pride welcomes you to the growing family of new product owners.

The Rock Buckets and Skeleton Buckets have been designed with care and built by skilled workers using quality materials. Proper assembly, maintenance, and safe operating practices will help you get years of satisfactory use from this machine.

Application

The Land Pride SRB15 Series Rock Buckets and SSB15 Series Skeleton Buckets have uses and applications in farming, ranching, construction sites, nurseries, campuses, theme parks, salvage operations, warehouses, lumber yards, and large or small retail outlets. They have the capability of quickly and conveniently turning your skid steer loader or tractor loader equipped with a universal quick attach mounting system into a bucket expanding your material handling capability.

Models SRB1566, SRB1572, & SRB1578 are available in 66", 72" & 78" widths respectively and models SSB1566 & SSB1578 are available in 66" & 78" widths respectively. Whichever model you select, you'll find that these Land Pride attachments will save you time and money and make getting that material handling job done a whole lot easier.

For additional information and performance enhancing options, see "**Specifications & Capacities**" on page 13 and "**Features & Benefits**" on page 14.

Using This Manual

- This Operator's Manual is designed to help familiarize you with safety, assembly, operation, adjustments, troubleshooting, and maintenance. Read this manual and follow the recommendations to help ensure safe and efficient operation.
- The information contained within this manual was current at the time of printing. Some parts may change slightly to assure you of the best performance.
- To order a new Operator's or Parts Manual, contact your authorized dealer. Manuals can also be downloaded, free-of-charge, from our website at www.landpride.com.

Terminology

"Right" or "Left" as used in this manual is determined by facing the direction the machine will operate while in use unless otherwise stated.

Definitions

IMPORTANT: A special point of information related to the following topic. Land Pride's intention is this information must be read & noted before continuing.

NOTE: A special point of information that the operator should be aware of before continuing.

Owner Assistance

The Online Warranty Registration should be completed by the dealer at the time of purchase. This information is necessary to provide you with quality customer service.

The parts on your bucket have been specially designed by Land Pride and should only be replaced with genuine Land Pride parts. Contact a Land Pride dealer if customer service or repair parts are required. Your Land Pride dealer has trained personnel, repair parts, and equipment needed to service the implement.

Serial Number

Model No. _____Serial No. _____

Refer to Figure 1 for location of your serial number plate. For quick reference and prompt service, record model number and serial number in the spaces provided above and again on warranty page 17. Always provide model and serial number when ordering parts and in all correspondences with your Land Pride dealer.

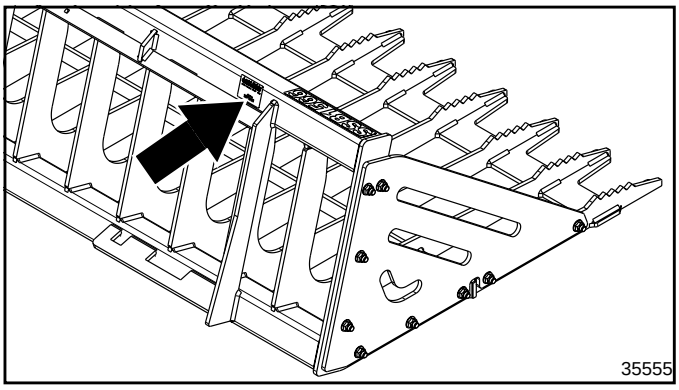

Serial Number Plate Location
Figure 1

Further Assistance

Your dealer wants you to be satisfied with your new Rock Bucket or Skeleton Bucket. If for any reason you do not understand any part of this manual or are not satisfied with the service received, the following actions are suggested:

1. Discuss the matter with your dealership service manager making sure that person is aware of any problems you may have and has had the opportunity to assist you.
2. If you are still not satisfied, seek out the owner or general manager of the dealership, explain the problem, and request assistance.
3. For further assistance write to:

Land Pride Service Department
1525 East North Street
P.O. Box 5060
Salina, Ks. 67402-5060

E-mail address
lpservicedept@landpride.com

Skid Steer/Tractor Requirements

The SSB15 & SRB15 Series buckets are designed to attach to a universal quick attach mounting system. Consult the skid steer or tractor Operator's Manual for operating capacity, lifting capacity, and operating specifications. They will vary from unit to unit. Do not exceed the rated capacities and specifications of the skid steer or tractor.

WARNING

Never carry loads with a bucket that exceed rated operating and lift capacities of the skid steer or tractor. Exceeding the machine's rated capacities can result in a rollover or other serious hazards that can cause injury or death.

WARNING

Light weight tractors and some skid steer loaders will require rear ballast for heavy loads to maintain steering control. Be sure to consult your Tractor/Skid Steer Operator's Manual to determine whether or not to add ballast.

Torque Requirements

Refer to **"Torque Values Chart"** on page 16 to determine correct torque values when tightening hardware.

Before You Start

Make sure that the intended skid steer/tractor conforms to the **"Skid Steer/Tractor Requirements"** provided above.

Read and understand this Operator's Manual and **"Set-Up Checklist"** below before assembling and attaching the bucket to your skid steer or tractor.

Set-Up Checklist

	Check	Reference
☐	Have a fork lift or loader with properly sized chains and safety stands capable of lifting and supporting the equipment on hand.	
☐	Make sure all major components and loose parts are shipped with the machine.	Assembly & Set-up
☐	Make sure all safety labels are correctly located and legible. Replace if damaged.	Page 4

Uncrating Instructions

1. Cut top of crating off and lift crating top straight up.

> **NOTE:** Do not lift upper bucket in a fashion that will allow the bucket to swing down and contact bucket below. Doing so can damage one or both buckets.

2. Attach lifting straps to upper bucket in a fashion that will allow the bucket to be raised vertically without swinging down against bucket below.
3. While being careful not to make contact with bucket below, raise upper bucket straight up and then gently lower bucket onto the floor.
4. Finish cutting away crate and then remove bottom bucket. Be careful not to hit other objects or to scratch the finish in the process.

Assembly and Set-Up

The SRB15 Series Rock Bucket is shipped complete. Skip to **"Skid Steer & Tractor Hook-Up"** on page 7.

The SSB15 Series Skeleton Bucket is shipped complete. without end panels. If end panels were not purchased with the bucket, skip to **"Skid Steer & Tractor Hook-Up"** on page 7. If end panels are included, see **"Installation of SSB15 End Panels"** below.

Installation of SSB15 End Panels

End panels, if not purchased with the SSB15 Series bucket, can be purchased through your nearest Land Pride dealer. See part number and description below when ordering end panels.

Part No.	Description
380-057A	KIT, SGS15 BOLT-ON END PANELS

Refer to Figure 1-1:

1. Attach end plate (#2) to the left side of bucket (#1) with 1/2"-13 x 1 1/2" GR5 carriage bolts (#3) and hex flange lock nuts (#4) as shown.
2. Tighten lock nuts to the correct torque.
3. Repeat steps 1 & 2 for the right side.

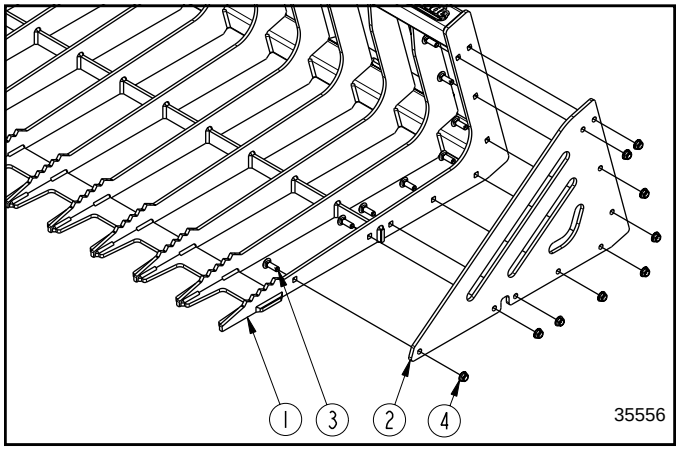

Installation of Optional End Panels
Figure 1-1

Skid Steer & Tractor Hook-Up

DANGER

A Crushing Hazard exists when hooking-up equipment. Do not allow anyone to stand between skid steer/tractor and bucket while hooking-up.

CAUTION

Make sure skid steer/tractor hitch is properly attached to the bucket hitch. It must be secured under the bucket top angle bars and hitch plate lock handles must be locked down with locking pins extending fully through bottom slots in the bucket hitch. An improperly attached bucket can come loose & fall.

NOTE: The buckets are designed for skid steers and tractors with front mounted loaders.

Refer to Figure 1-2:

1. Check for and remove any debris in the hitch point areas before hooking-up to the bucket.
2. Drive skid steer or tractor slowly to the bucket hitch making sure the hitch plate on the skid steer/tractor is parallel with the bucket's top angle bar.
3. Rotate top of skid steer/tractor tilt arms slightly forward.
4. Position top of skid steer/tractor hitch plate under the top angled bar on the bucket and slowly raise the hitch plate up until hitch plate is seated under the top angle bar.
5. Rotate top of skid steer/tractor tilt arms back until bucket makes full contact with face of hitch plate.
6. Push lock handles on skid steer/tractor hitch down. Make sure lock pins go through the bottom slots in the bucket hitch and handles are fully locked down.

Equipment Clearances

It is important to check clearance before using the bucket by carefully going through the bucket's full range of motions.

1. Start skid steer/tractor and raise bucket approximately 12" off the ground.
2. If necessary, have someone stand close by that can motion for the operator to stop if a problem develops while completing steps 3 & 4 below.
3. Fully extend and retract hydraulic cylinders on the end of the skid steer/tractor loader arms while watching for interferences between skid steer/tractor and bucket frame.
4. Raise skid steer/tractor loader arms fully up and repeat step 3.

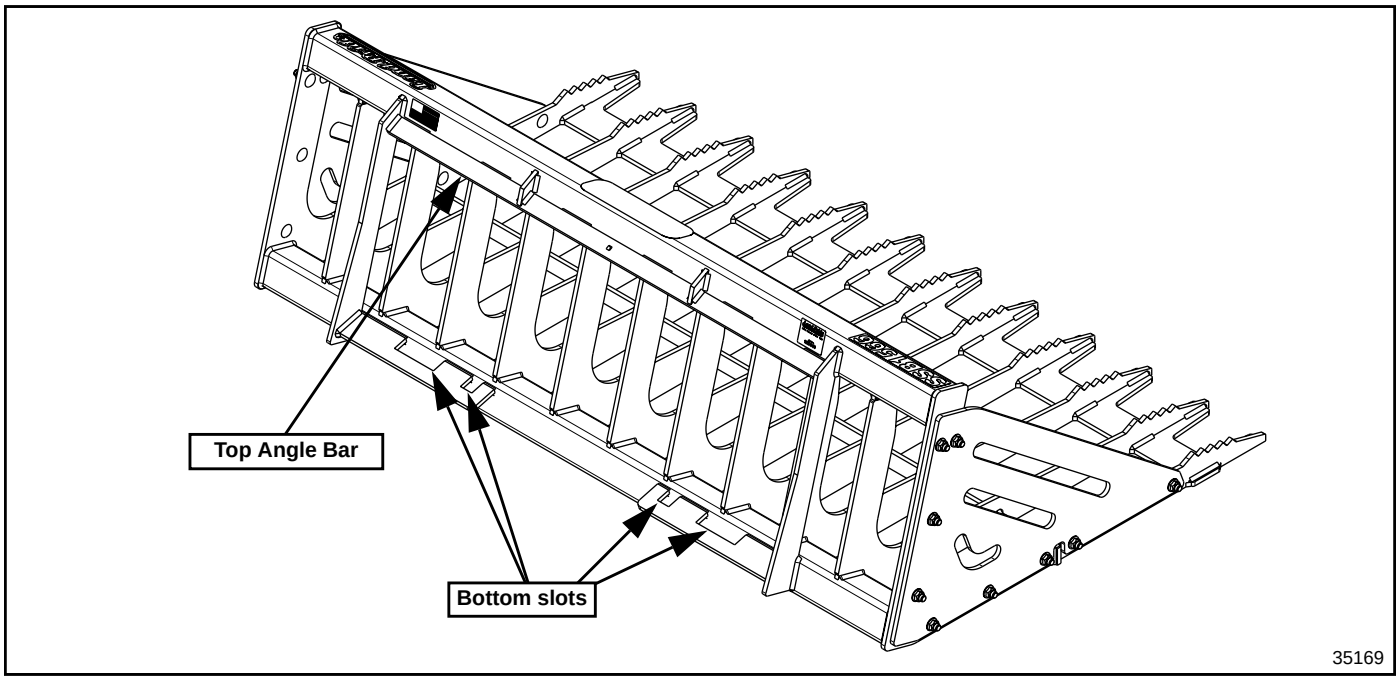

Hook-up to Bucket
Figure 1-2

Operating Checklist

Hazard control and accident prevention are dependent upon the awareness, concern, prudence and proper training involved in the operation, transport, storage, and maintenance of the bucket. Therefore, it is absolutely essential that no one operates the unit without first having read, fully understood, and become totally familiar with the Operator's Manual. Make sure the operator has completed the Operating Checklist below.

Operating Checklist

✔	Check	Page No.
	Read and follow all safety rules carefully. Refer to "Important Safety Information" and Safety Alert Symbols throughout this manual.	All pages
	Read and follow hook-up & preparation instructions. Refer to "Section 1: Assembly & Set-Up".	Page 6
	Read and follow all operating procedures. Refer to "Section 2: Operating Procedures".	Page 8
	Read and follow all maintenance instructions. Refer to "Section 3: Maintenance & Lubrication".	Page 12
	Make sure there are no hydraulic leaks. Refer to "Avoid High Pressure Fluids Hazard".	Page 3
	Check bucket initially & periodically for loose hardware. Refer to "Torque Values Chart for Common Bolt Sizes".	Page 16

General Inspection

Make the following inspections with bucket attached to a skid steer/tractor that is parked on a level surface.

1. Complete Operating Checklist table provided above.
2. Inspect skid steer/tractor safety equipment to make sure it is in good working condition and that all safety alert decals are visible and readable. Replace all missing and unreadable safety alert decals.
3. Inspect hitch hook-up to bucket. Make sure skid steer/tractor hitch is secured under bucket's top angle bar, lock pins are fully extend through the bottom slots in the bucket hitch, and lock handles are fully locked down.
4. Consult your skid steer/tractor Operator's Manual to determine if ballast is required. Add ballast if needed.
5. Inspect condition of skid steer or tractor hydraulic hoses, fittings, and valves before starting the machine. Make sure hoses are not pinched, kinked, twisted, or frayed and that they will not contact moving parts.
6. Operate bucket through its full range of movements to check for clearances. For detailed instructions, see **"Equipment Clearances"** on page 7.

Operating Safety

DANGER

Operate only skid steer/tractors equipped with a Roll-Over Protective Structure (ROPS) and seat belt. Fasten seat belt snugly and securely to help protect against being thrown, crushed, or run over causing serious injury or death.

DANGER

Do not allow anyone to operate this equipment who has not fully read and understood instructions in this manual, who has not been properly trained in the safe operation of this equipment, and anyone who is under the age of 16.

DANGER

Do not allow riders on the skid steer/tractor or bucket.

DANGER

Hydraulic fluid under high pressure can penetrate the skin. Wear protective gloves and safety glasses or goggles when working with hydraulic systems. Use a piece of cardboard or wood rather than hands when searching for hydraulic leaks. If hydraulic fluid is injected into the skin or eyes, it must be treated by a doctor familiar with this type of injury within a few hours or gangrene may result. DO NOT DELAY.

DANGER

Make sure skid steer/tractor is stopped on solid, level ground before raising load to dump. Raise load only to the height necessary to successfully complete the dump.

DANGER

Never come in contact with power lines, utilities, gas lines, or other hazards, above or below ground, that can cause serious injury or death from electrocution, explosion, or fire.

DANGER

Never dump a load around gas lines, overhead power lines, utilities, or other hazards that can cause serious injury or death from electrocution, explosion, or fire.

DANGER

A crushing hazard always exists around buckets. A person can become pinched or crushed as the bucket is rotated, raised, and/or lowered causing serious injury or death. Objects in the bucket can shift and fall resulting in death or serious injury.

- *Do not drive up to anyone standing in front of a fixed object such as a wall or bench. Never assume that the skid steer/ tractor brakes will stop the machine in time.*
- *Keep all pedestrians, pets, and livestock away from your work area. Never allow anyone to go near the bucket, under the bucket, or near the bucket load.*

- *Do not lift loads that cannot be contained or have objects smaller than the openings between the bucket teeth.*
- *Keep load centered in the bucket, even when stopped. This will optimize load stability and protect against load shifting.*
- *Keep load positioned forward enough to prevent accidental spillage on operator and skid steer or tractor.*
- *Keep load slightly tilted back to secure its weight against the hitch frame. Rotating front of bucket too high can cause load to shift and fall back onto the operator or others. Rotating front of bucket too low can cause load to shift forward and fall from the bucket.*
- *Make sure all objects are securely on the bucket before lifting them to keep them from shifting and falling off.*
- *The operator of the skid steer/tractor must know how to control the machine and how to stop the machine and attachment quickly in an emergency.*
- *Use a "spotter" when it is hard to see in the direction you are traveling and when placing a load that obstructs your vision. A person can be in a blind spot.*
- *When equipped, sound the horn before traveling in reverse. Drive at a slower speed to compensate for blind spots.*

WARNING

Do not abuse equipment. Incorrect use of the bucket can damage equipment and cause serious injury or death.

- *Always know the weight of the load being lifted. Maximum lift capacity should never exceed the rated lift capacity of the skid steer or tractor being used. Exceeding the machine's rated capacities can result in a rollover or other serious hazards that can cause injury or death.*
- *Check hook-up points frequently to make sure skid steer/ tractor hitch is properly positioned under the top angle bar, locking pins are seated in their notches, handles are locked down, and equipment is in good operating condition.*
- *Do not lift loads exceeding rated lifting capacity of bucket.*
- *Do not chain or strap loads to loader arms or loader hitch.*
- *Do not use bucket as a working platform. Using the bucket as a working platform can cause serious injury or death.*
- *Do not use bucket for lifting front end of skid steer or tractor off the ground. Doing so can damage equipment and cause injury if exceeding lift capacity of unit.*
- *Do not use the bucket for pulling objects out of the ground, for digging into the ground, for prying other objects, or for pushing and towing other equipment.*
- *The parts on your bucket have been specially designed and should only be replaced with genuine Land Pride parts. Altering the bucket can adversely affect its performance and/ or reliability.*

WARNING

Always secure equipment with solid supports before working under it. Never work under equipment supported by hydraulics. Hydraulics can drop equipment if controls are actuated or if hydraulic lines burst. Either situation can drop machinery instantly even when power to hydraulics is off.

WARNING

Never carry loads with a bucket that exceed rated operating and lift capacities of the skid steer or tractor. Exceeding the machine's rated capacities can result in a rollover or other serious hazards that can cause injury or death.

CAUTION

Not obeying all safety instructions listed below can result in injury to the operator and other personnel.

- *Always lower bucket to ground level before dismounting skid steer/tractor.*
- *Always store bucket in a secure position so that it will not fall over.*
- *Follow all recommendations provided by the skid steer or tractor manufacturer when adding counter weights and other ballast.*
- *Follow manufacturer's recommendations when dismounting and parking the skid steer or tractor.*

CAUTION

Wear eye protection when operating a skid steer or tractor without an enclosure or protective shield. Dust and debris can get in eyes.

Transport Safety

WARNING

Follow all safety precautions when transporting a load. Not using safe transporting methods can damage the equipment and cause death or serious injury.

- *Always transport loads low to the ground to maintain stability of the skid steer/tractor.*
- *Always transport over ramps and inclines exceeding 10 percent grade with load on the "uphill" side of the skid steer or tractor. This will require one to drive up and back down inclines in excess of 5.7 degrees.*
- *Always travel straight up and straight down inclines. Make turns only on level ground.*
- *Keep equipment and load away from electrical power lines. Place an orange warning sign under overhead electrical power lines indicating type of danger above.*
- *Transporting loads across inclines, over ramps, grades, bumpy, soft, or slippery surfaces reduces machine stability and lift capacity. Transporting and lifting loads under these conditions is extremely dangerous.*
- *Use tractors with wide front axles only and move all tractor wheels out to their widest position for maximum stability.*
- *When traveling on public roads at night or during the day, use accessory lights and devices for adequate warning to operators of other vehicles. Comply with all federal, state, and local laws.*
- *When traveling on roadways, transport in such a way that faster moving vehicles may pass you safely.*

Bucket Operation

Picking Up a Load

WARNING

Keep all bystanders at a safe distance when entering and picking up a load. Objects can shift or be thrown suddenly as the bucket makes contact with load causing serious injury or death.

WARNING

Enter a load carefully making sure no objects will come back into the operator's space causing serious injury or death.

IMPORTANT: Do not ram bucket into a pile or hook a chain to the bucket to secure a load. Doing so can damage the bucket.

1. Be sure to read and understand all safety alerts under **"Operating Safety"** on page 8.
2. Make sure load does not exceed rated lift capacity of the skid steer or tractor being used to lift the load.
3. Check for overhead obstructions.
4. Center bucket on material to be picked up.
5. Make a complete stop in front of material and position bucket at the proper height to enter the pile.
6. Slowly drive into the pile. Do not ram bucket into pile.
7. Lift load a few inches and tilt bucket back slightly.
8. Make sure you have good control of the load. If load is not secure, release and recapture load.
9. Back load out of the pile slowly making sure load clears all other obstacles.
10. Position load at a safe, low traveling height before transferring to the unloading site.

Traveling With a load

1. Be sure to read and understand all safety alerts under **"Transport Safety"** on page 9.
2. Pedestrians always have the right-of-way.
3. Keep load tilted back slightly.
4. When possible, travel with bucket and load kept low to the ground.
5. Continually scan all sides for pedestrians, other traffic, and obstacles.
6. If load is large and blocks your view, travel in reverse.
7. Always drive at a safe speed and slow down when going around corners. Avoid sudden braking.
8. Leave enough clearance when turning so that the bucket and load does not contact obstacles such as vehicles, buildings, trees, or fences.
9. When traveling over a ramp or incline, keep load on the "uphill" side of skid steer/tractor.
10. When possible, travel straight up and down grades, ramps, and inclines. Avoid making turns on grades, ramps, and inclines.
11. Raise or lower load only when stopped, never while traveling.
12. Slow down when traveling over rough or hilly terrain.
13. Do not transport loads on public roadways.
14. Transport on public roadways without a load and transport in such a way that faster moving vehicles may pass you safely.
15. Plan your route to avoid heavy traffic.

Dumping a Load

1. Be sure to read and understand all safety alerts under **"Operating Safety"** on page 8.
2. Stop in front of desired location.
3. Slowly raise load to a height just above the pile.
4. Move forward slowly checking to make sure bucket and load clears all obstacles.
5. Stop forward movement when load is positioned over its dump location.
6. Tilt front of bucket down to release the load and if necessary, raise bucket up to allow load to fully discharge from the bucket.
7. Once load has settled onto the pile, rotate front of bucket level.
8. Before backing up, make sure bucket will clear all objects and that no pedestrians or other traffic are behind or on either side of the equipment. Begin backing up slowly while watching for clearances, pedestrians, and other traffic.
9. Leave enough clearance when turning and/or lowering the bucket so that it does not make contact with obstacles such as vehicles, buildings, trees, or fences.
10. Lower bucket to transporting height (low to the ground) before moving again.

Unhooking the Bucket

Refer to Figure 2-1 on page 11:

1. See **"Long Term Storage"** on page 12 if parking bucket for long periods and end of season.
2. Park skid steer/tractor on a flat, level, solid surface and lower bucket onto the surface.
3. Place transmission in park, set park brake, shut power equipment off, and remove switch key.
4. With bucket resting on the ground, pull lock handles up to remove pins from bottom slots in the bucket hitch.
5. Return to skid steer/tractor and slightly rotate bottom of hitch plate away from the bucket.
6. Slowly lower skid steer/tractor hitch until top angle bar and skid steer/tractor hitch have separated.
7. Back skid steer/tractor slowly away from the bucket making sure it does not interfere with unit.

General Operating Instructions

By now you should have familiarized yourself with the Operator's Manual for your bucket. If you haven't, please do so now. Proceed by getting onto the seat of your tractor or skid steer and starting it up. It isn't going to take you long to learn how to use your new Land Pride bucket, but we do recommend that you take a little time to practice securely attaching and detaching your bucket to and from your mounting plate. It is also important to practice lifting, lowering, maneuvering, and dumping a load until you gain the confidence and skill needed to have a good feel in what you are doing. We cannot overstress the importance of following the safety information and operating procedures that are spelled out in this Operator's Manual.

As you quickly become more skilled and adept in using your bucket, you will soon learn that it is always more important to focus on the "don'ts" than it is to focus on the "dos". For example, don't exceed the lift capacity of your bucket, tractor, or skid steer. Don't lift your load too high creating an unstable load and unsafe situation. Don't tilt your load too far backwards, setting up a situation that could cause your load to roll or spill backwards onto you, the tractor, and the operator's platform. Don't drive too fast for your ground and load conditions. Don't work on or around slippery or sloped areas that could cause you to lose control of the tractor or skid steer. Don't allow pedestrians, pets, or livestock to approach the danger zone of your working area. Don't leave your skid steer or tractor with bucket raised above ground level.

If you just follow these few safety reminders, you will find that you will quickly become very adept, handy, and skillful at using your Land Pride Rock Bucket.

See **"Specifications & Capacities"** on page 13 and **"Features & Benefits"** on page 14 of your Operator's Manual for additional information.

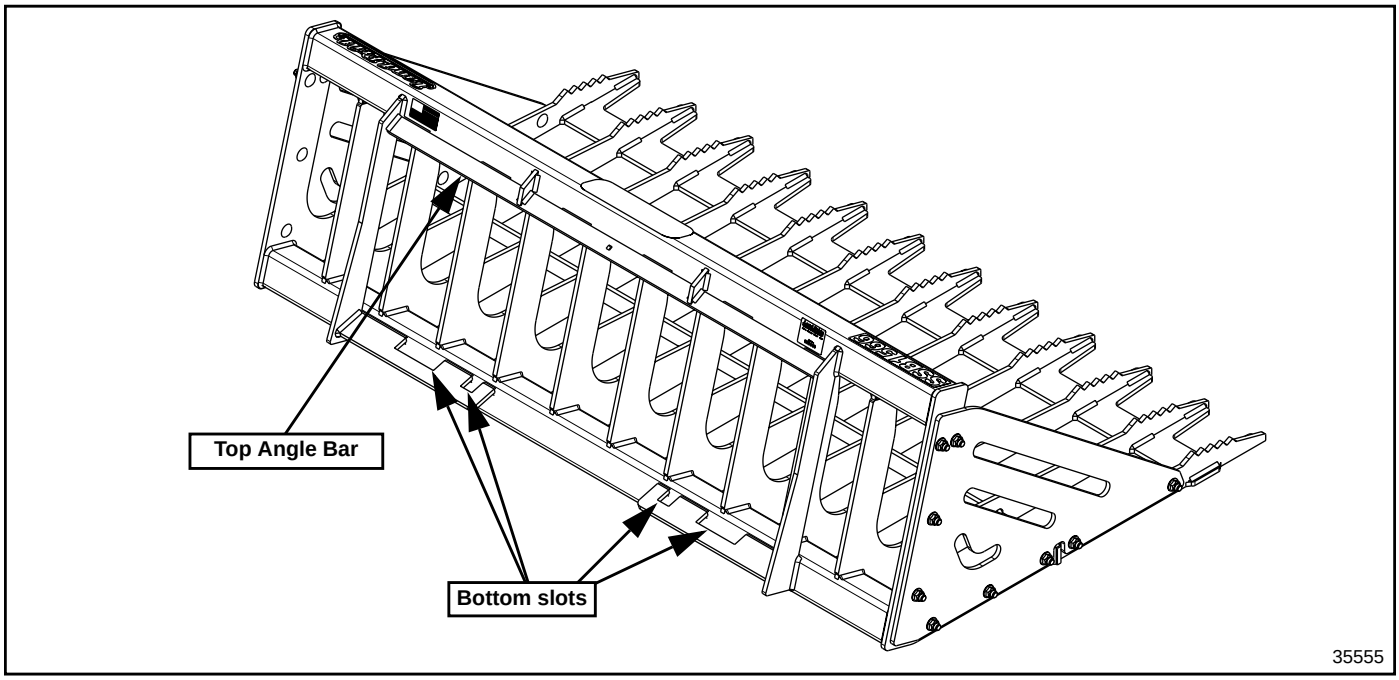

Unhooking From the bucket
Figure 2-1

Maintenance

Proper servicing and adjustment is the key to the long life of any implement. With careful inspection and routine maintenance, you can avoid costly downtime and repair.

Check all bolts and pins after using the bucket for several hours and on a regular basis thereafter to ensure they are tight and secured.

Check hitch fit-up on a regular basis to ensure trash or other objects have not loosened the hitch connection.

Replace worn, damaged, or missing bucket parts only with genuine Land Pride parts.

Replace illegible or missing safety labels by obtaining new labels from your Land Pride dealer.

WARNING

Always secure equipment with solid supports before working under it. Never work under equipment supported by hydraulics. Hydraulics can drop equipment if controls are actuated or if hydraulic lines burst. Either situation can drop machinery instantly even when power to hydraulics is off.

WARNING

Check hitch fit-up frequently. An improper fit-up can result in the bucket detaching from the skid steer or tractor and cause serious injury or death.

WARNING

Daily inspect and maintain equipment. Loose, broken, and missing hardware can cause equipment to not perform properly and can result in bodily injury or death.

WARNING

Do not alter Land Pride equipment or replace parts with other brands. Doing so can cause equipment perform improperly and may lead to breakage that can cause bodily injury or death. Replace parts only with genuine Land Pride parts.

CAUTION

Do not alter the bucket in a way which will adversely affect its performance or reliability. Doing so can damage the bucket, cause personal injury, and void the warranty.

Long Term Storage

Clean, inspect, service, and make necessary repairs to the bucket when parking it for long periods and when parking it at the end of a working season. This will help ensure that the unit is ready for use next time you hook-up to it.

1. Clean off any dirt and grease that may have accumulated on the bucket. Scrape off compacted dirt and then wash its surface thoroughly with a garden hose.
2. Inspect bucket for loose, damaged, or worn parts and adjust or replace when needed.
3. Repaint parts where paint is worn or scratched to prevent rust. Ask your Land Pride dealer for aerosol touch-up paint. They are also available in touch-up bottles with brush, quarts, and gallon sizes by adding TU, QT, or GL to the end of the aerosol part number.

Land Pride Touch-up Paint

Part No.	Part Description
821-002C	PAINT LP BLACK SPRAY CAN

4. Replace all damaged or missing guards & decals.
5. Store bucket on a level surface in a clean, dry place. Inside storage will reduce maintenance and make for a longer bucket life.
6. Do not allow children to play on or around the stored bucket.

SRB15 Series & SSB15 Series

Description	Rock Buckets			Skeleton Buckets	
	SRB1566	**SRB1572**	**SRB1578**	**SSB1566**	**SSB1578**
Weight With End Panels	509 lbs.	551 lbs.	592 lbs.	390 lbs.	442 lbs.
Without End Panels	N/A	N/A	N/A	327 lbs.	380 lbs.
Width With End Panels	66 3/4"	72 3/4"	78 3/4"	68 1/4"	80 1/4"
Without End Panels	N/A	N/A	N/A	66 3/4"	78 3/4"
Height	21 1/2"			21 1/2"	
Number of Teeth	21	23	25	12	14
Teeth Spacing	3"			5 1/2"	
Tooth Thickness	3/8"			3/8"	
Working Length of Teeth	39"			36"	
End Plates	Standard			Optional	

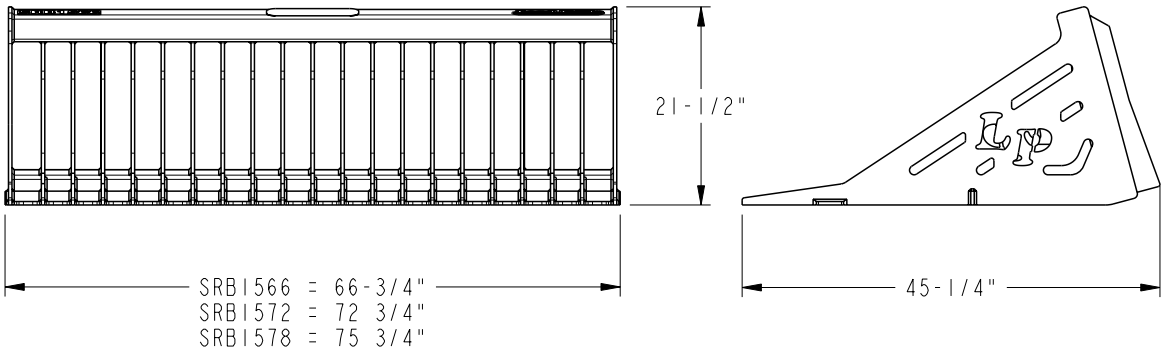

35558

SRB15 Series Rock Buckets

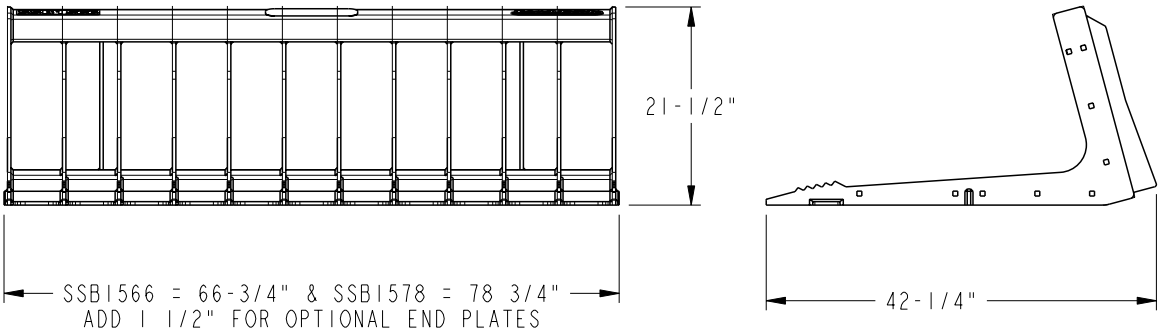

35557

SSB15 Series Skeletion Buckets
Without Optional End Panels

SRB15 & SSB15 Series

Features	Benefits
Attaches to power equipment easily	Uses Skid Steer Quick Hitch design for quick and easy attachment.
Designed to fit skid steer loaders and front tractor loaders	The quick attach plate mounted bucket can be attached to a wide variety of machines. Note: Tractor loaders must be fitted with a skid steer universal quick attach mounting system.
Grade 80 teeth material	More than double the strength of mild steel.
Front gusseted tines	Strengthens tine tips.
Open bottom and back	Allows dirt to fall through tines.

Troubleshooting Chart

Problem	Cause	Solution
Cannot lift load	Insufficient power to lift load.	Reduce load on bucket or switch to a skid steer or tractor that is rated for more lift capacity.
Load is shifting	Hitch is not properly attached to skid steer/ tractor.	Always make certain hitch is properly attached before lifting a load. Reattach hitch to skid steer/tractor if loose.
	Load is being carried too high.	Recommended carrying height is as close to ground as possible without hitting objects.
	Traveling and/or turning too fast.	Reduce speed to a safe non-bouncing speed.
	Traveling sideways to an incline.	Travel straight up and down inclines.
	Load is not centered in the bucket.	Center load on bucket.
	Traveling with teeth level or tilted down at the front.	Rotate teeth back so that the ends at the front are slightly higher than at the back.
	Teeth are bent.	Straighten bent teeth.
	Traveling forward while going down an incline with a slope in excess of 10 percent (5.7 degrees).	Back down steep inclines.
Teeth are bending or breaking	The load's center of gravity is not centered in the bucket.	Reposition load so that the load's center of gravity is centered in the bucket.
	Load is too heavy for the bucket.	Lift lighter loads.
	Ramming bucket into the ground or load.	Never ram with the bucket.
	Striking solid objects with the bucket.	Watch for objects while moving and allow clearance when making turns. Inspect area thoroughly before working in it and place markers, such as flags, to indicate potential hazards.
	Prying objects out of the ground.	Never use bucket to pry objects.
	Hooking bucket teeth on a solid object below ground such as tree roots and rocks.	Never run bucket teeth under ground to get under a load.
	Wedging objects between the bucket teeth.	Do not wedge objects between the bucket teeth.

Torque Values Chart for Common Bolt Sizes

Bolt Size (inches)	Bolt Head Identification: Grade 2		Grade 5		Grade 8	
in-tpi [1]	N · m [2]	ft-lb [3]	N · m	ft-lb	N · m	ft-lb
1/4" - 20	7.4	5.6	11	8	16	12
1/4" - 28	8.5	6	13	10	18	14
5/16" - 18	15	11	24	17	33	25
5/16" - 24	17	13	26	19	37	27
3/8" - 16	27	20	42	31	59	44
3/8" - 24	31	22	47	35	67	49
7/16" - 14	43	32	67	49	95	70
7/16" - 20	49	36	75	55	105	78
1/2" - 13	66	49	105	76	145	105
1/2" - 20	75	55	115	85	165	120
9/16" - 12	95	70	150	110	210	155
9/16" - 18	105	79	165	120	235	170
5/8" - 11	130	97	205	150	285	210
5/8" - 18	150	110	230	170	325	240
3/4" - 10	235	170	360	265	510	375
3/4" - 16	260	190	405	295	570	420
7/8" - 9	225	165	585	430	820	605
7/8" - 14	250	185	640	475	905	670
1" - 8	340	250	875	645	1230	910
1" - 12	370	275	955	705	1350	995
1-1/8" - 7	480	355	1080	795	1750	1290
1-1/8" - 12	540	395	1210	890	1960	1440
1-1/4" - 7	680	500	1520	1120	2460	1820
1-1/4" - 12	750	555	1680	1240	2730	2010
1-3/8" - 6	890	655	1990	1470	3230	2380
1-3/8" - 12	1010	745	2270	1670	3680	2710
1-1/2" - 6	1180	870	2640	1950	4290	3160
1-1/2" - 12	1330	980	2970	2190	4820	3560

Bolt Size (Metric)	Bolt Head Identification: Class 5.8		Class 8.8		Class 10.9	
mm x pitch [4]	N · m	ft-lb	N · m	ft-lb	N · m	ft-lb
M 5 X 0.8	4	3	6	5	9	7
M 6 X 1	7	5	11	8	15	11
M 8 X 1.25	17	12	26	19	36	27
M 8 X 1	18	13	28	21	39	29
M10 X 1.5	33	24	52	39	72	53
M10 X 0.75	39	29	61	45	85	62
M12 X 1.75	58	42	91	67	125	93
M12 X 1.5	60	44	95	70	130	97
M12 X 1	90	66	105	77	145	105
M14 X 2	92	68	145	105	200	150
M14 X 1.5	99	73	155	115	l215	160
M16 X 2	145	105	225	165	315	230
M16 X 1.5	155	115	240	180	335	245
M18 X 2.5	195	145	310	230	405	300
M18 X 1.5	220	165	350	260	485	355
M20 X 2.5	280	205	440	325	610	450
M20 X 1.5	310	230	650	480	900	665
M24 X 3	480	355	760	560	1050	780
M24 X 2	525	390	830	610	1150	845
M30 X 3.5	960	705	1510	1120	2100	1550
M30 X 2	1060	785	1680	1240	2320	1710
M36 X 3.5	1730	1270	2650	1950	3660	2700
M36 X 2	1880	1380	2960	2190	4100	3220

[1] in-tpi = nominal thread diameter in inches-threads per inch

[2] N· m = newton-meters

[3] ft-lb= foot pounds

[4] mm x pitch = nominal thread diameter in millimeters x thread pitch

Torque tolerance + 0%, -15% of torquing values. Unless otherwise specified use torque values listed above.

Warranty

Land Pride warrants to the original purchaser that this Land Pride product will be free from defects in material and workmanship beginning on the date of purchase by the end user according to the following schedule when used as intended and under normal service and conditions for personal use.

Overall Unit: One year Parts and Labor

This Warranty is limited to the repair or replacement of any defective part by Land Pride and the installation by the dealer of any such replacement part, and does not cover common wear items. Land Pride reserves the right to inspect any equipment or parts which are claimed to have been defective in material or workmanship.

This Warranty does not apply to any part or product which in Land Pride's judgment shall have been misused or damaged by accident or lack of normal maintenance or care, or which has been repaired or altered in a way which adversely affects its performance or reliability, or which has been used for a purpose for which the product is not designed. Misuse also specifically includes failure to properly maintain oil levels, grease points, and driveline shafts.

Claims under this Warranty should be made to the dealer which originally sold the product and all warranty adjustments must be made through an authorized Land Pride dealer. Land Pride reserves the right to make changes in materials or design of the product at any time without notice.

This Warranty shall not be interpreted to render Land Pride liable for damages of any kind, direct, consequential, or contingent to property. Furthermore, Land Pride shall not be liable for damages resulting from any cause beyond its reasonable control. This Warranty does not extend to loss of crops, any expense or loss for labor, supplies, rental machinery or for any other reason.

No other warranty of any kind whatsoever, express or implied, is made with respect to this sale; and all implied warranties of merchantability and fitness for a particular purpose which exceed the obligations set forth in this written warranty are hereby disclaimed and excluded from this sale.

This Warranty is not valid unless registered with Land Pride within 30 days from the date of purchase by the end user.

IMPORTANT: The Online Warranty Registration should be completed by the dealer at the time of purchase. This information is necessary to provide you with quality customer service.

Model Number _____ **Serial Number** _____

Corporate Office: P.O. Box 5060
Salina, Kansas 67402-5060 USA
www.landpride.com