Zero Turn Mowers

ZT360 & ZT372 Accu-Z®

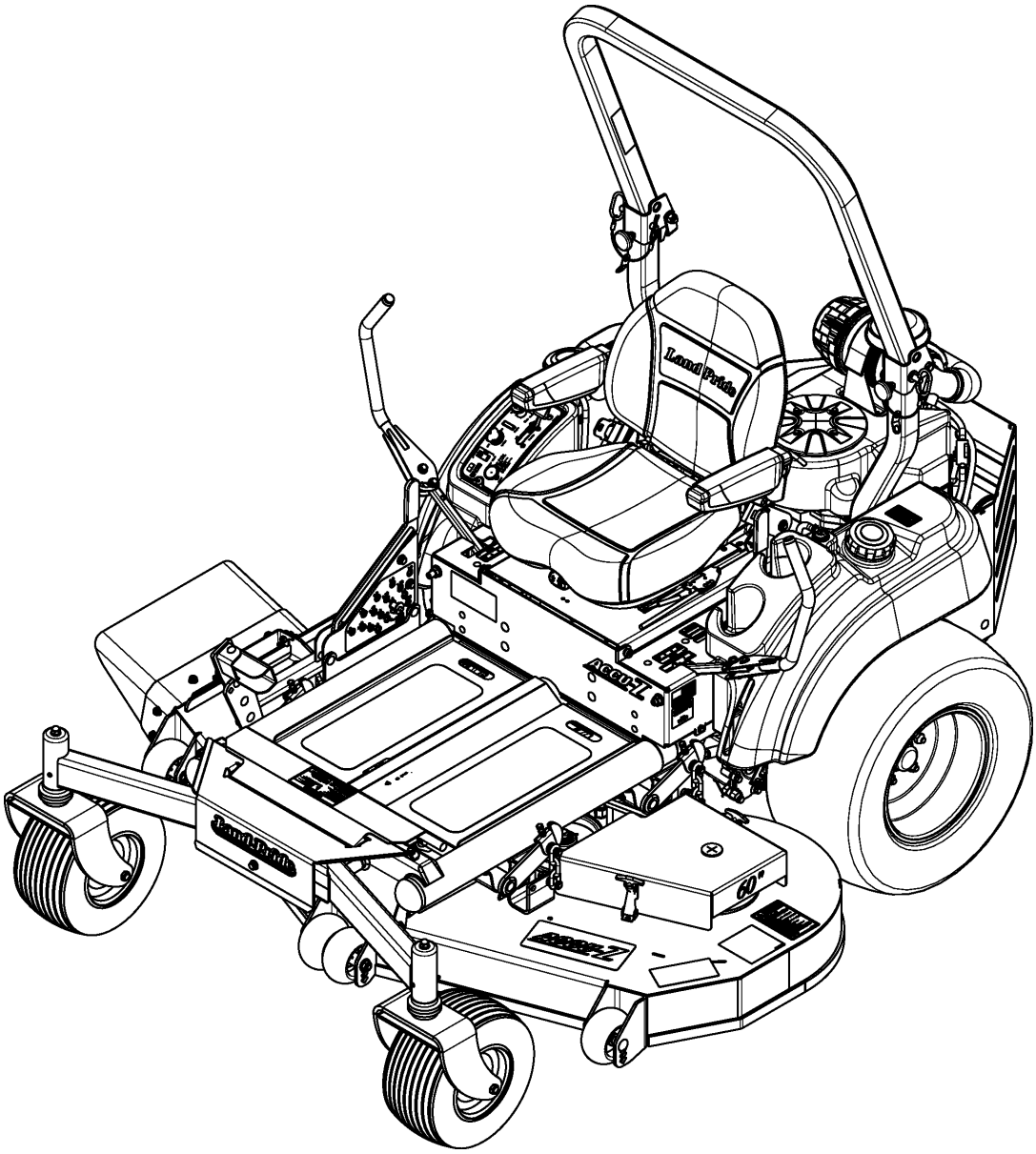

357-610P
Parts Manual

Land Pride

Read the Operator's Manual entirely. When you see this symbol, the subsequent instructions and warnings are serious - follow without exception. Your life and the lives of others depend on it!

© Copyright 2022 Printed 01/05/2023

Cover photo may show optional equipment not supplied with standard unit.

Table Of Contents

Section 1: Introduction **2**
- *Using This Manual* *2*
- *Manual Replacement Information* *2*
- *Manual Revisions* *2*
- *Touch-up Paint* *2*
- *Hardware Legend* *3*
- *Replacement Hardware* *3*
- *Serial Numbers* *3*
- *Part Number Service Coding* *3*

Section 2: Frame Footrest & Seat **4**
- *Footrest & Seat Support* *4*
- *Frame & Bumper* *6*
- *ROPS Folding W/ Seat Belt* *8*
- *Seat Components Deluxe (839-320C)* *10*
- *Seat Components Suspension (839-002C)* *12*

Section 3: Electrical, Levers & Transnission **14**
- *Brake Park* *14*
- *Control Levers* *16*
- *Deck Lift* *18*
- *Electrical Components* *20*
- *Electrical Wiring Schematic Kawasaki Engine* *22*
- *Electrical Wiring Schematic Main Harness* *24*
- *Transmission Components (831-089C & 831-090C)* *26*
- *Transmission to Frame Assembly* *28*

Section 4: Engine, Air Cleaner & Fuel System .. **30**
- *Air Cleaner Kawasaki 27 HP* *30*
- *Engine Assembly Kawasaki 27 HP* *32*
- *Fuel System* *34*

Section 5: Wheels **36**
- *Drive Wheels* *36*
- *Drive Wheels* *38*
- *Front Caster Wheel* *40*

Section 6: Deck **42**
- *Deck Assembly* *42*
- *Deck Pulleys & Drive Belt* *44*

Section 7: Decals **46**
- *Decal Placement* *46*
- *Touch-up Paints - LP* *48*

Section 8: Options & Accessories **50**
- *Blade Bundle Kit* *50*
- *Lift Jack Front Mount* *52*
- *Light Kit* *54*
- *Rear Saftey Light & Sign Kit* *56*

This Page Intentionally Left Blank

General Information

Using This Manual

This manual is divided into sections. The first section contains General Information. The remaining sections divide the machine into segments (i.e. Frames, Drives, Hydraulics, etc.) which illustrate and list all parts. A Parts Number Index is located at the back of the book.

The Land Pride parts in this manual are specially designed for this machine and should be replaced with Land Pride parts only.

The information in this manual is current at time of printing. Some parts may change to assure top performance.

Right-hand and left-hand as used in this manual are determined by facing the direction the machine will travel while in use.

Below is an example of two facing pages from a parts manual. Familiarize yourself with the type of information contained on these pages.

Manual Replacement Information

Replacement manuals are available. Refer to our website at www.landpride.com or e-mail us at lit@landpride.com for additional information. Our website continues to provide the most up-to-date manuals available.

Touch-up Paint

Repaint parts where paint is worn or scratched to prevent rust. Aerosol cans and touch-up bottles with brush applicator are available through your local dealer. Also available are quart and gallon size paints. Add QT or GL to end of the Aerosol P/N.

Land Pride color descriptions and part numbers are listed on the "Land Pride Touch-Up Paints" page in the "Decals" section of this book.

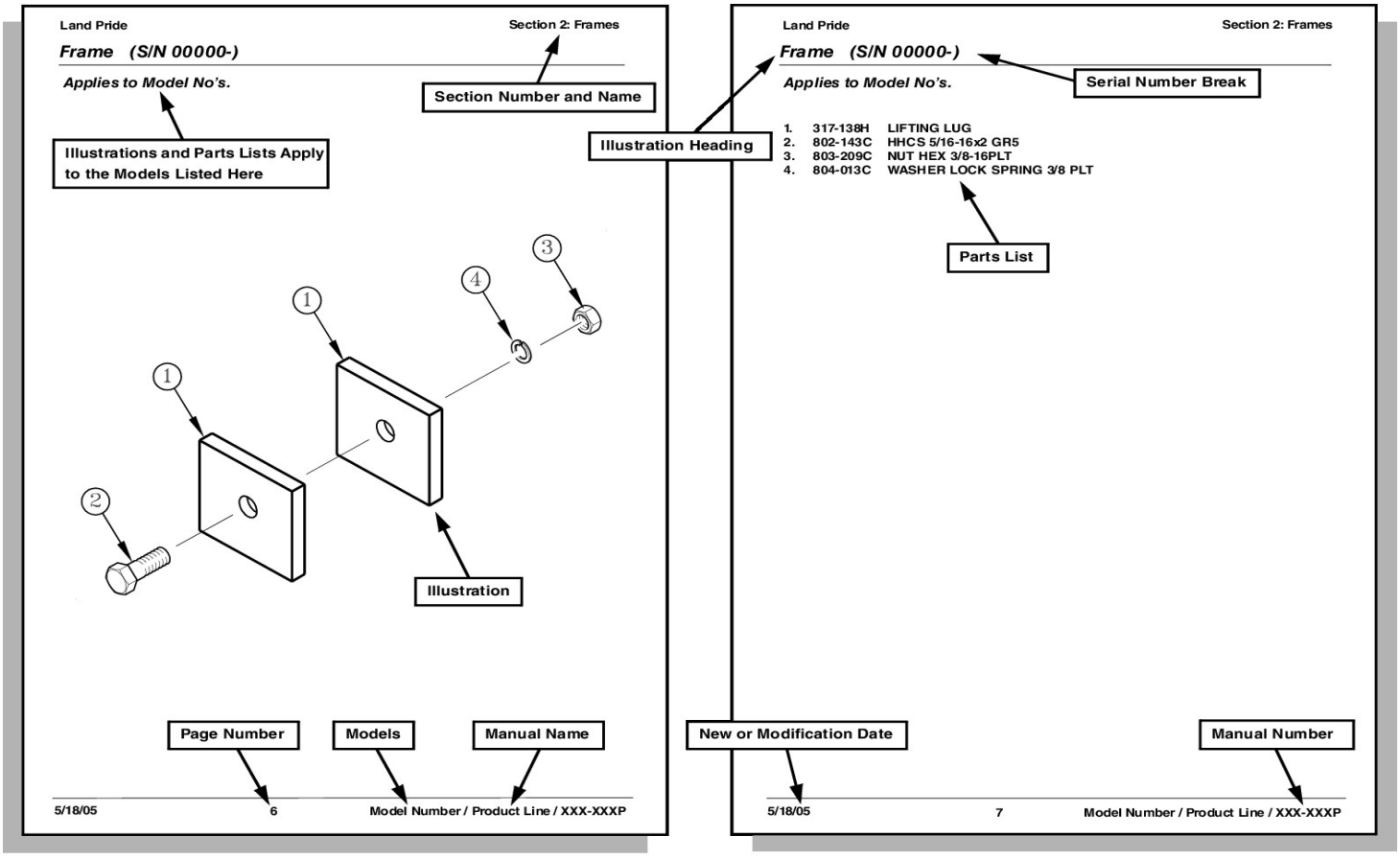

© Copyright 2022. All rights Reserved

Land Pride provides this publication "as is" without warranty of any kind, either expressed or implied. While every precaution has been taken in the preparation of this manual, Land Pride assumes no responsibility for errors or omissions. Neither is any liability assumed for damages resulting from the use of the information contained herein. Land Pride reserves the right to revise and improve its products as it sees fit. This publication describes the state of this product at the time of its publication, and may not reflect the product in the future. The illustrations in this manual are not intended for safe and proper assembly or disassembly of equipment. The illustrations are intended for ordering parts only.

Land Pride is a registered trademark.

All other brands and product names are trademarks or registered trademarks of their respective holders.

Printed in the United States of America.

General Information

Hardware Legend

AR	As Required
BLADE	Blade Bolt
C	Cap Screw
CP	Cotter Pin
CPHSSS	Cup Point Hex Socket Set Screw
CPSHSS	Cup Point Square Head Set Screw
CPSQHSS	Cup Point Square Head Set Screw
CRFCHMS3	Cross Recess Flat Countersunk Head Machine Screw
CRPHMS	Cross Recess Pan Head Machine Screw
CRPHTFS	Cross Recess Pan Head Thread Forming
CRRHMS	Cross Recess Round Head Machine Screw
CRTHMS	Cross Recess Truss Head Machine Screw
CSNB	Countersunk Square Neck Bolt
FHMS	Flat Head Machine Screw
FTC	Full Thread Cap Screw
H	Hex Nut
HCLN	Hex Center Lock Nut
HFLCS	Hex Flange Lock Cap Screw
HFS	Hex Flange Screw
HFSLN	Hex Flange Serrated Lock Nut
HFSS	Hex Flange Serrated Screw
HHCS	Hex Head Cap Screw or Metric Bolt
HSBHCS	Hex Socket Button Head Cap Screw
HSFCHCS	Hex Socket Flat Countersunk Head Cap Screw
HSHCS	Hex Socket Head Cap Screw
HSSS	Hex Socket Head Screw
HTLN	Hex Top Lock Nut
HWHCS	Hex Washer Head Cap Screw
HWHMS	Hex Washer Head Machine Screw
HXBHCS	Hex Socket Button Head Cap Screw
J	Hex Jam Nut
JIC	37 Degree Tapered Thread
L	Helical Spring Lock Washer
LUG	Lug Bolt
NFC	National Fine Cap Screw
NPSM	National Pipe Straight Mechanical
NPTF	National Pipe Taper Fuel
P	Wide Plain Washer
PHMS	Pan Head Machine Screw
PLOW	Plow Bolt
RHMS	Round Head Machine Screw
RHSNB	Round Head Square Neck Bolt
SCREW LEVELING	Leveling Screw
SCREW THUMB	Thumb Screw
SCREW WELD	Weld Screw
SFCHMS	Slotted Flat Countersunk Head Machine Screw
SFHMS	Slotted Fillister Head Machine Screw
SP	Special
SP SCREW	Special Screw
SQHSS	Square Head Set Screw
SRHMS	Slotted Round Head Machine Screw
SSS	Socket Set Screw
STCS	Self Tapping Cap Screw
STHMS	Slotted Truss Head Machine Screw
WHEEL	Wheel Studs and Hub Long Bolts
WING	Wing Bolt

Replacement Hardware

The **Hardware Legend** above lists hardware abbreviations used in the parts list. All bolts and nuts are Grade 5 unless otherwise noted. The use of improper grades of hardware can result in personal injury, damage to equipment, or loss of property.

Colored Replacement Parts

Land Pride offers replacement parts in factory standard colors and also on select models in Green, Orange, Red and Blue. Because of the variety of colors available, special attention must be given to the part number to prevent ordering the wrong replacement part.

A suffix number corresponding to one of the colors below must be added at the end of Land Pride's part number when ordering a replacement part with that color.

81 . . . . . Green **83 . . . . .Red**
82 . . . . . Orange **84 . . . . .Blue**

For example, if you are ordering a replacement part with part number 555-555C and the part you need is red, then add the suffix 83 to the end of the number to make the part number read 555-555C83. Parts ordered without a suffix number will be supplied in factory standard colors.

Black Replacement Parts

Some parts are factory standard black and some must be special ordered black. If your part is special ordered black, a second part number with the additional suffix number 85 on the end will be available. In this situation you must order that part with the suffix number for it to be black. Parts that are factory standard black will not have the suffix number.

Part Number Service Coding

Within the parts list some part numbers are coded for revisions and interchangeability. See notations in revision column.

Serial Numbers

Always use the serial and model number when ordering parts. Refer to the Operator's Manual for serial number plate location.

(S/N 20001+)	Includes serial numbers 20001 and above (to the latest number)
(S/N 10001 to 20000)	Includes serial numbers between and including 10001 and 20000
(S/N 10000-)	Includes serial numbers 10000 and below (to the earliest number)

Footrest & Seat Support

Applies to Models: ACCU-Z ZT372, ACCU-Z ZT360

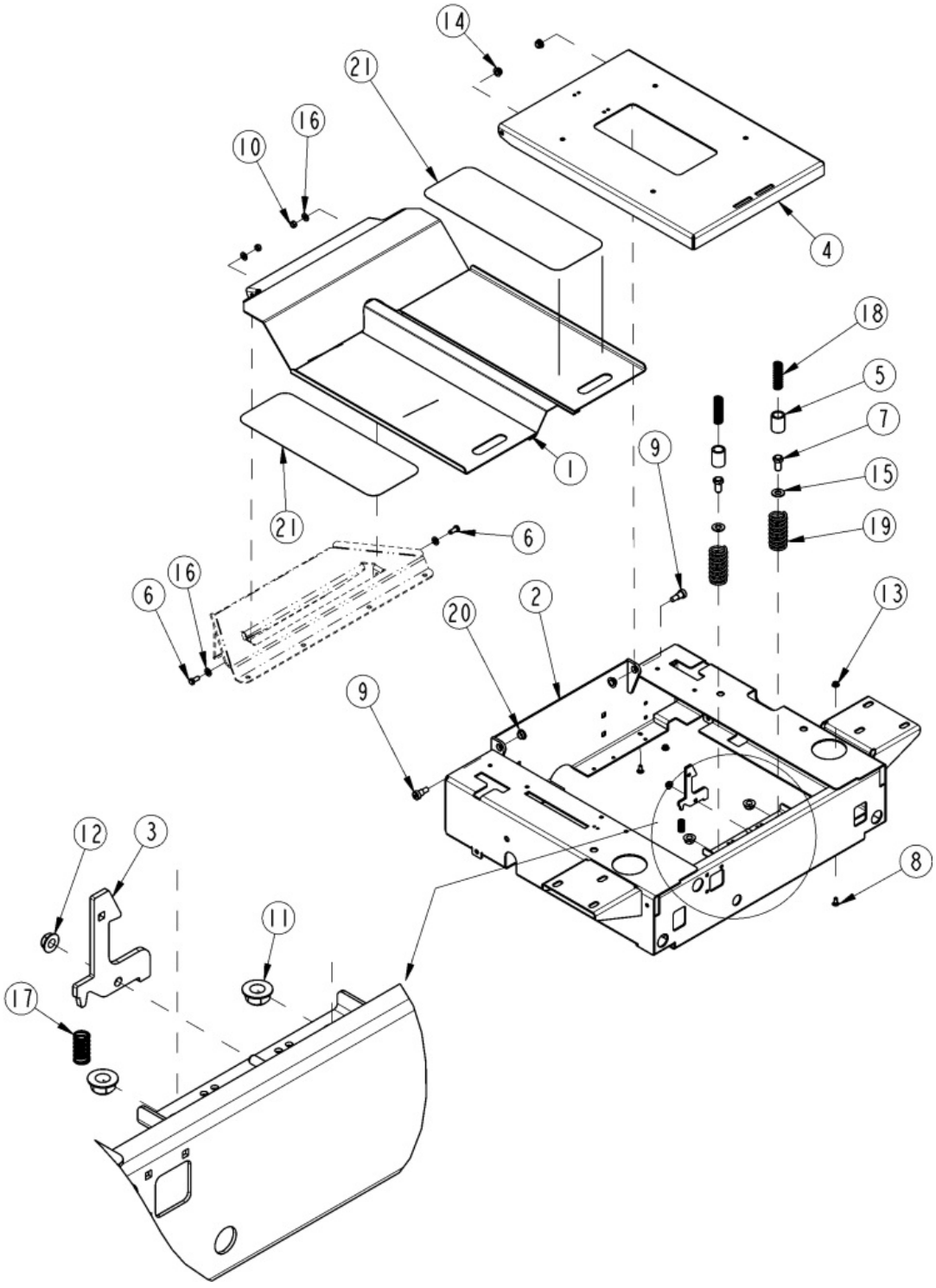

Footrest & Seat Support

Applies to Models: ACCU-Z ZT372, ACCU-Z ZT360

Ref.	Part No.	Part Description	Comments
	DWG35352	Drawing Image Number	
1	357-597H	FLOOR PAN WELDMENT	
2	357-599H	PEDESTAL	
3	357-852D	SEAT LATCH ARM	
4	358-208D	SEAT PAN	
5	358-375D	SPRING SPACER	
6	802-007C	HHCS 5/16-18X3/4 GR5	
7	802-258C	HHCS 1/2-13X1 GR5	
8	802-633C	RHSNB 1/4-20X5/8 PLT	
9	802-747C	SHLDR BLT 1/2DX1/2L 3/8-16 SS	
10	803-011C	NUT LOCK 5/16-18 PLT	
11	803-169C	NUT HEX FLG LOCK 1/2-13 PLT	
12	803-177C	NUT HEX FLG TP LK 5/16-18ZNYCR	
13	803-194C	NUT HEX WHIZ 1/4-20 PLT	
14	803-209C	NUT FLANGE LOCK 3/8-16 PLT	
15	804-016C	WASHER FLAT 1/2 SAE PLT	
16	804-036C	WASHER FLAT 5/16 SAE PLT	
17	807-096C	SPRING COMP 1/2 OD X 1 LG	
18	807-216C	SPRING COMP .75OD .12W 2.63LG	
19	807-288C	SPRG 1.55ODX1.65WX3.5L SEATPAN	
20	817-560C	BSHG FLG .50IDX.62ODX.31L	
21	840-262C	TREAD, FLOOR PANEL	

Frame & Bumper

Applies to Models: ACCU-Z ZT372, ACCU-Z ZT360

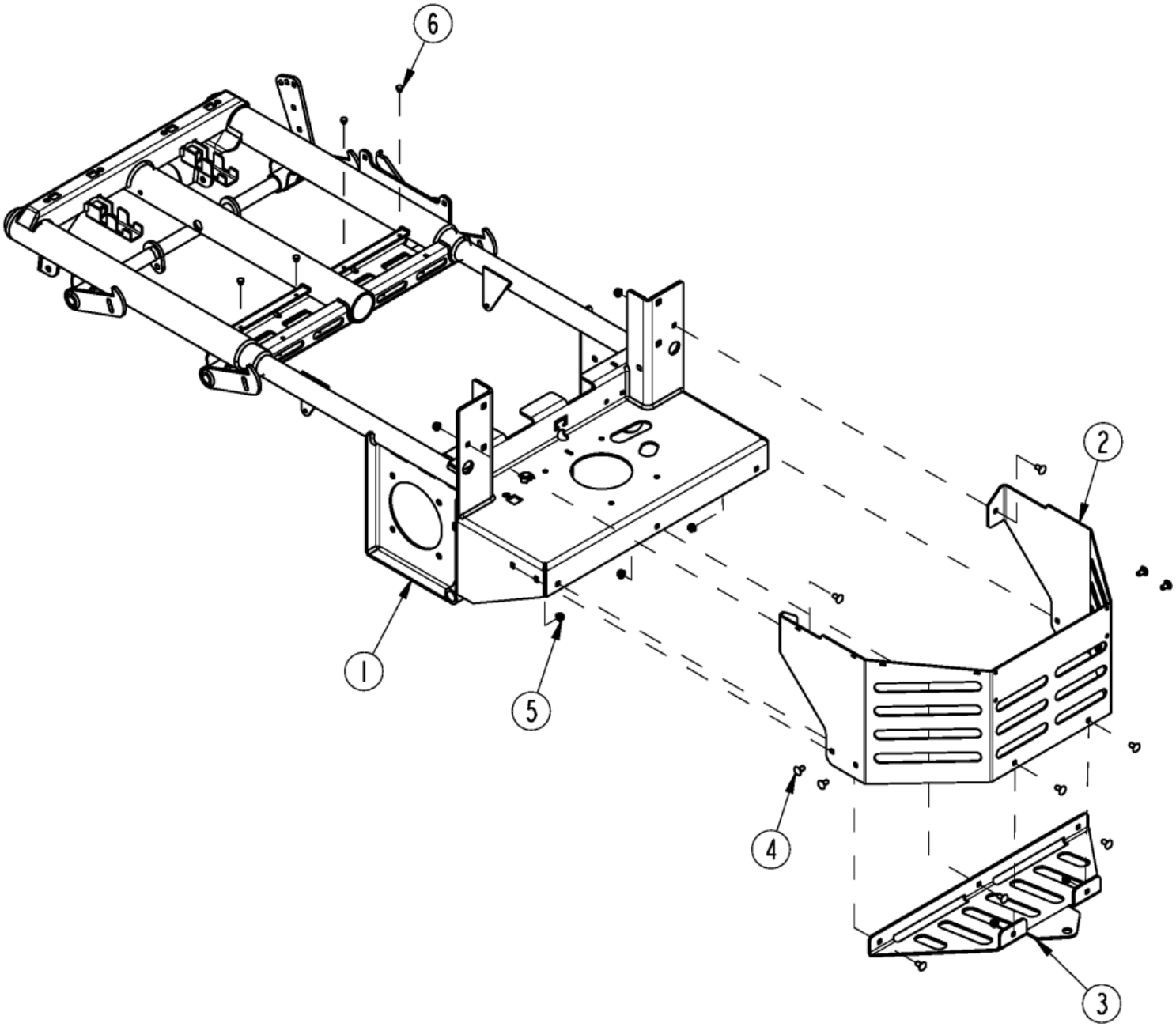

Frame & Bumper

Applies to Models: ACCU-Z ZT372, ACCU-Z ZT360

Ref.	Part No.	Part Description	Comments
	DWG 35353	Drawing Image Number	
1	357-594H	FRAME	
2	358-366D	REAR BUMPER	Revised at S/N 805601+
3	358-367D	REAR HITCH	
4	802-149C	RHSNB 3/8-16X3/4 GR5	
5	803-209C	NUT FLANGE LOCK 3/8-16 PLT	
6	816-491C	TAILGATE BUMPER	

ROPS Folding W/ Seat Belt

Applies to Models: ACCU-Z ZT372, ACCU-Z ZT360

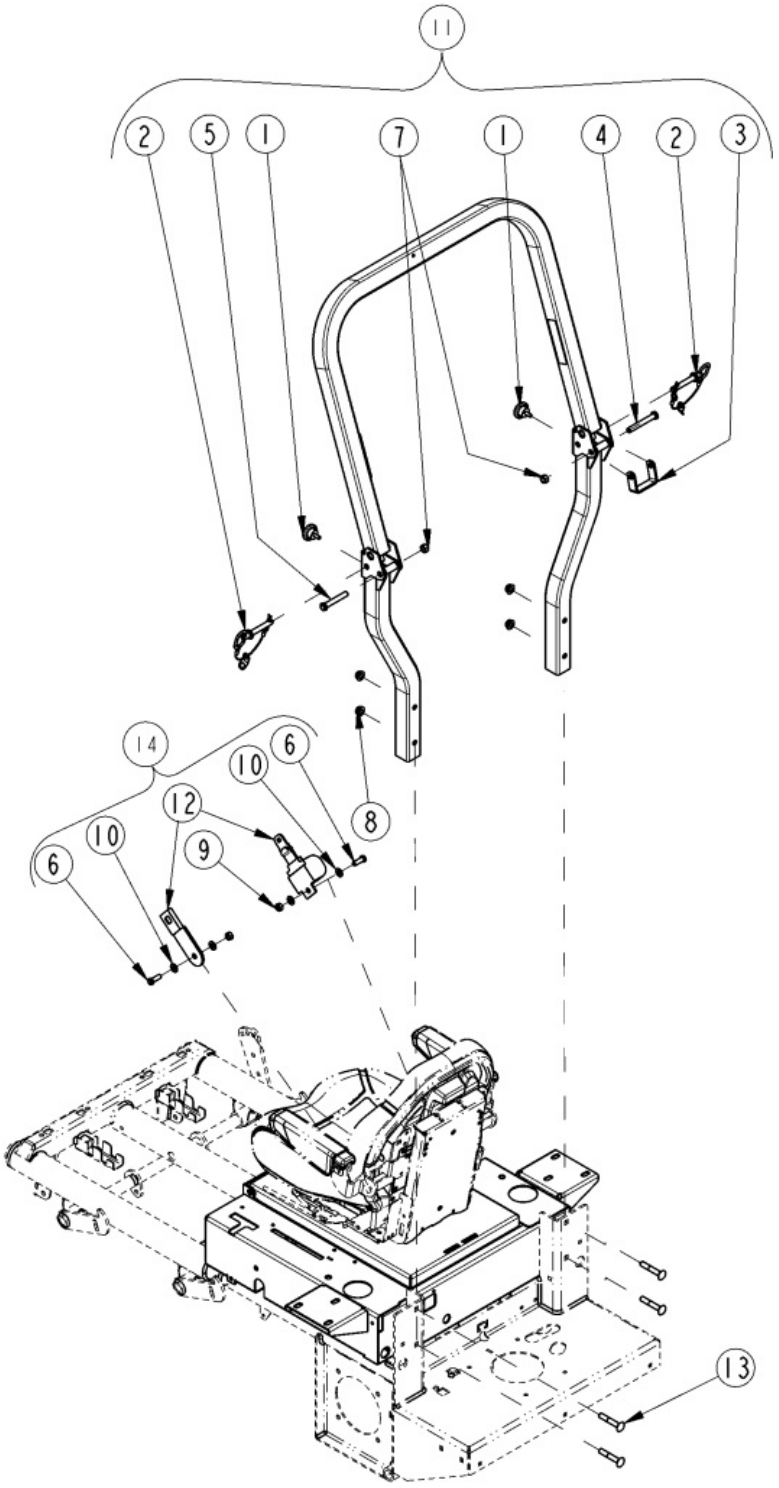

ROPS Folding W/ Seat Belt

Applies to Models: ACCU-Z ZT372, ACCU-Z ZT360

Ref.	Part No.	Part Description	Comments
	DWG35354	Drawing Image Number	
1	230024700	LOCKING KNOB	
2	230321672	PIN, ROPS HINGE	
3	711941272	ROPS STOP 2.43	
4	802-042C	HHCS 1/2-13X3 3/4 GR5	
5	802-099C	HHCS 1/2-13X3 1/4 GR5	
6	802-227C	HHCS 7/16-20X1 1/4 GR8	
7	803-019C	NUT LOCK 1/2-13 PLT	
8	803-169C	NUT HEX FLG LOCK 1/2-13 PLT	
9	803-333C	NUT HEX NYLOCK 7/16-20 PLT	
10	804-041C	WASHER FLAT 7/16 SAE PLT	
11	823-424C	ASSY, ZT3 FOLDING ROPS ISO	
12	840-272C	SEAT BELT RETRACTABLE	
13	842-016C	RHSNB 1/2-13X3 GR5 PLT	
14	357-420A	KIT, Z-MWRS RTRCTABLE SEAT BLT	

Seat Components Deluxe (839-320C)

Applies to Models: ACCU-Z ZT372, ACCU-Z ZT360

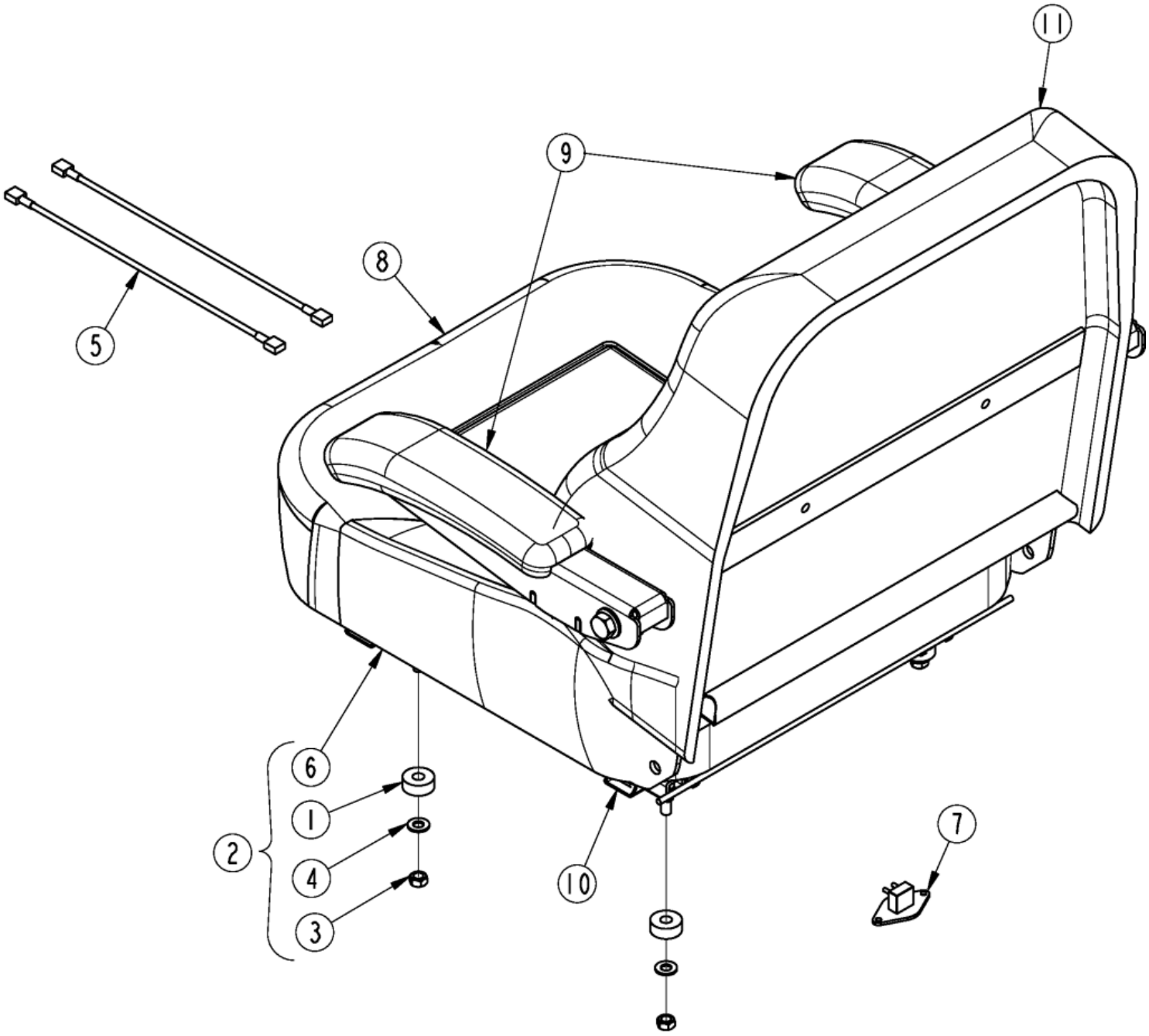

Seat Components Deluxe (839-320C)

Applies to Models: ACCU-Z ZT372, ACCU-Z ZT360

Ref.	Part No.	Part Description	Comments
	DWG35355	Drawing Image Number	
1	356-074D	SPCR DELUXE SEAT MNT RAZOR PRO	
2	356-113A	DELUXE SEAT, EXCEL 781104	
3	803-011C	NUT LOCK 5/16-18 PLT	
4	804-036C	WASHER FLAT 5/16 SAE PLT	
5	833-384C	WIRE JUMPER BLACK	
6	839-320C	SEAT BLACK DELUXE CUSHION	Also order two of 833-384C
7	839-970C	KY SEAT SAFETY SWITCH	
8	839-416C	SKING BOTTOM SEAT COVER	
9	839-385C	SKING ARM REST KIT	
10	839-971C	KY SEAT TRACK (PAIR) 839-320C	Obsolete
11	839-411C	SKING BACK SEAT COVER	

Seat Components Suspension (839-002C)

Applies to Models: ACCU-Z ZT372, ACCU-Z ZT360

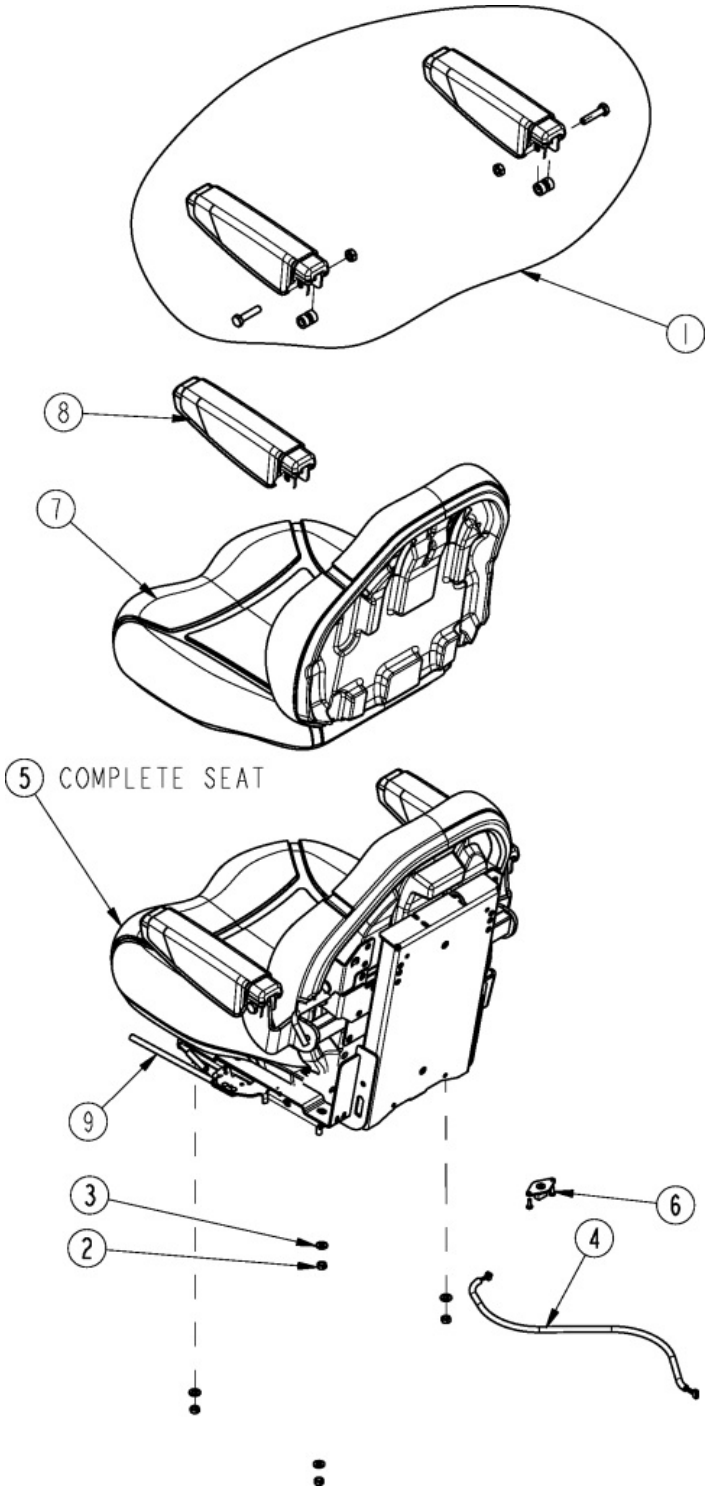

Seat Components Suspension (839-002C)

Applies to Models: ACCU-Z ZT372, ACCU-Z ZT360

Ref.	Part No.	Part Description	Comments
	DWG33786	Drawing Image Number	
1	839-417C	MILSCO ARMREST KIT	
2	803-011C	NUT LOCK 5/16-18 PLT	
3	804-036C	WASHER FLAT 5/16 SAE PLT	
4	833-445C	HARNESS ASSY,SEAT SWITCH	
5	839-002C	SEAT SUSP.BLK LOW PROFILE	
6	839-148C	OPERATOR PRESENCE SWITCH KIT	
7	839-149C	CUSHION/PAN FOR CR-100 KIT	
8	839-418C	ARM REST, INDIVIDUAL 839-417C	
9	839-145C	ADJUSTER, XR-210 & CR-100 KIT	

Brake Park

Applies to Models: ACCU-Z ZT372, ACCU-Z ZT360

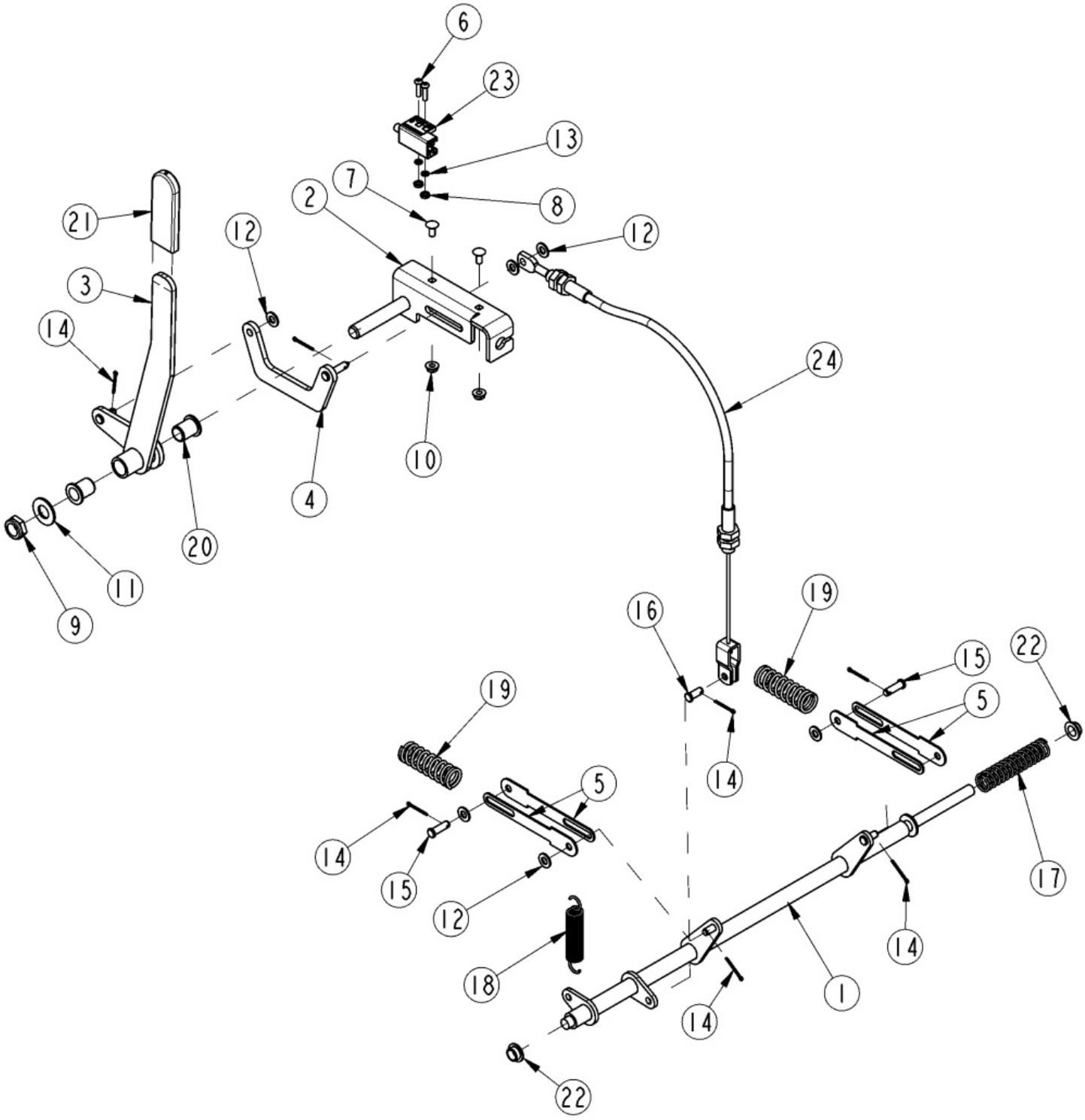

Brake Park

Applies to Models: ACCU-Z ZT372, ACCU-Z ZT360

Ref.	Part No.	Part Description	Comments
	DWG35361	Drawing Image Number	
1	357-521H	PIVOT ROD, PARK BRAKE	
2	357-522H	MOUNT, PARK BRAKE	
3	357-523H	HANDLE, PARK BRAKE	
4	357-525H	LINK, PARK BRAKE	
5	358-215D	PARK BRAKE LINK	
6	801-225C	HSBHCS #10-24 X 3/4	
7	802-633C	RHSNB 1/4-20X5/8 PLT	
8	803-001C	NUT HEX 10-24 PLT	
9	803-094C	NUT 5/8-11 NYLON COLLAR THIN	
10	803-194C	NUT HEX WHIZ 1/4-20 PLT	
11	804-021C	WASHER FLAT 5/8 SAE PLT	
12	804-036C	WASHER FLAT 5/16 SAE PLT	
13	804-054C	WASHER LOCK #10	
14	805-063C	PIN COTTER 3/32 X 1 LONG	
15	805-066C	PIN CLVS .31X.78 USBL	
16	805-400C	PIN CLVS .31X.52 USBL	
17	807-303C	SPRING COMP .875ODX4.0LX.095W	
18	807-309C	SPRING EXT, .750D X .095 X 4.0	
19	807-320C	SPRING COMP 1.0ODX3.19LX.125W	
20	817-028C	DOUBLE DISK ARM PIVOT BUSHINGS	
21	817-246C	GRIP HANDLE .84 ID X 4 LG	
22	817-560C	BSHG FLG .50IDX.62ODX.31L	
23	833-341C	SWITCH, 2-POLE 12V 5A PLUNGER	
24	891-253C	CABLE, PARK BRAKE	

Control Levers

Applies to Models: ACCU-Z ZT372, ACCU-Z ZT360

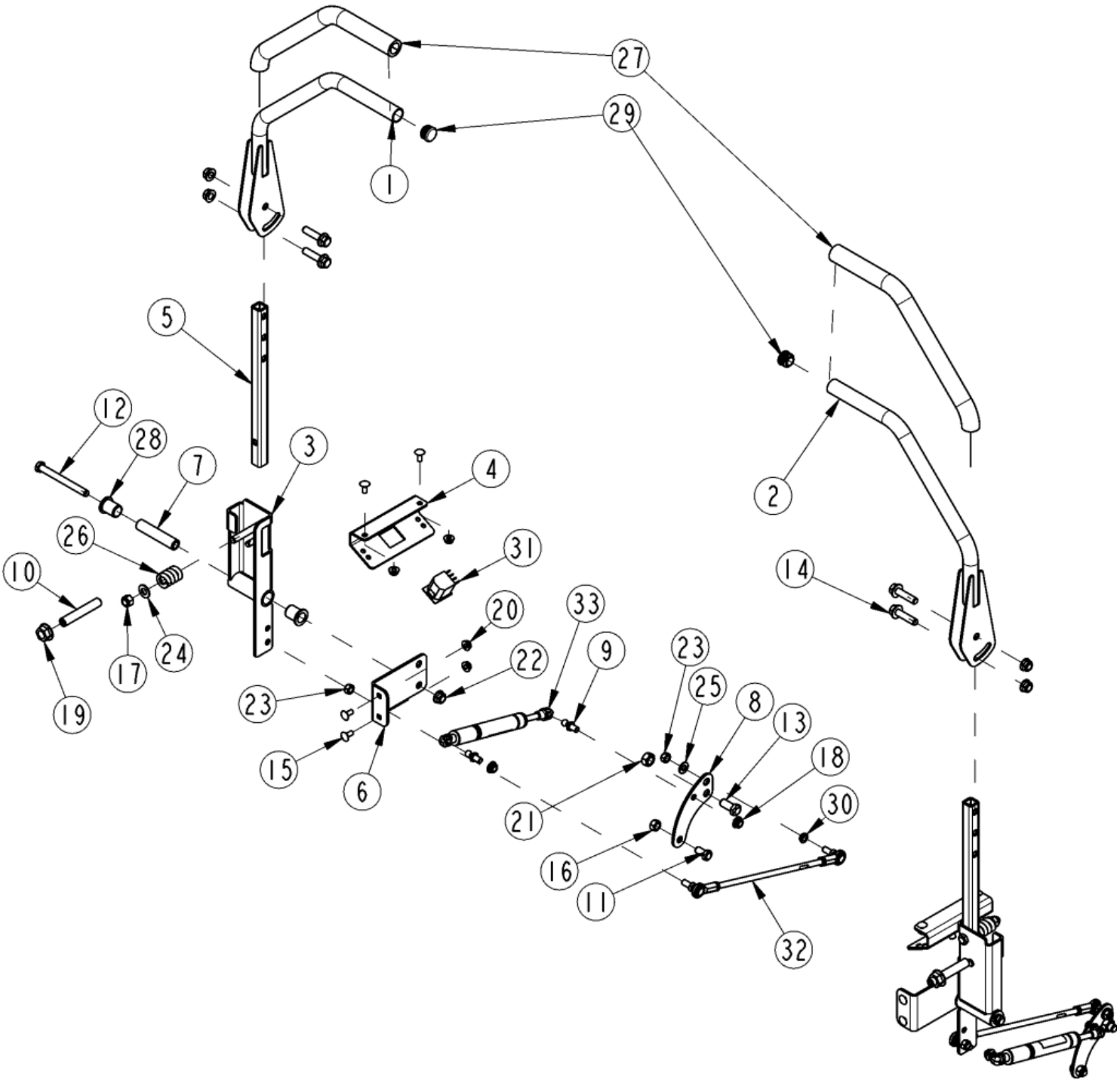

Control Levers

Applies to Models: ACCU-Z ZT372, ACCU-Z ZT360

Ref.	Part No.	Part Description	Comments
	DWG35362	Drawing Image Number	
1	357-002H	LEVER AY, DRIVE CONTROL LH	
2	357-042H	LEVER AY, DRIVE CONTROL RH	
3	357-514H	STEERING LEVER	
4	357-851D	MOUNT, NEUTRAL SWITCH	
5	358-086D	TUBE, DRIVE CONTROL STUB	
6	358-194D	BRACKET, STEERING PIVOT	
7	358-210D	PIVOT TUBE	
8	358-374D	LINKAGE BRACKET	
9	800-121C	BALL STUD 10MM X 5/16-18 UNC	
10	801-237C	SCREW SET SCKT HD 1/2-13X3	
11	802-014C	HHCS 3/8-16X3/4 GR5	
12	802-026C	HHCS 3/8-16X3 3/4 GR5	
13	802-080C	HHCS 7/16-14X1 GR5	
14	802-569C	HFSS 3/8-16X1 1/2 GR5	
15	802-633C	RHSNB 1/4-20X5/8 PLT	
16	803-013C	NUT LOCK 3/8-16 PLT	
17	803-078C	NUT LOCK 3/8-16 NYLON INSERT	
18	803-177C	NUT HEX FLG TP LK 5/16-18ZNYCR	
19	803-193C	NUT HEX FLANGE 1/2-13 GR G PLT	
20	803-194C	NUT HEX WHIZ 1/4-20 PLT	
21	803-200C	NUT HEX LOCK 7/16-14 PLT	
22	803-209C	NUT FLANGE LOCK 3/8-16 PLT	
23	803-270C	NUT HEX NYLOCK 5/16-24	
24	804-012C	WASHER FLAT 3/8 SAE PLT	
25	804-036C	WASHER FLAT 5/16 SAE PLT	
26	807-280C	SPRING COMP .905OD .24W 1.22L	
27	816-461C	GRIP, DRIVE CONTROL LEVER	
28	817-028C	DOUBLE DISK ARM PIVOT BUSHINGS	
29	817-618C	CAPLUG, CCF-7/8-14-20 BLACK	
30	817-755C	BSHG FLG .31IDX.44ODX.19L	
31	833-503C	SWITCH, 2 POLE 12 V PLUNGER	
32	890-070C	ROD AY, LH PUMP ADJUSTER	
33	891-384C	DAMPER, DRIVE CONTROL	

Deck Lift

Applies to Models: ACCU-Z ZT372, ACCU-Z ZT360

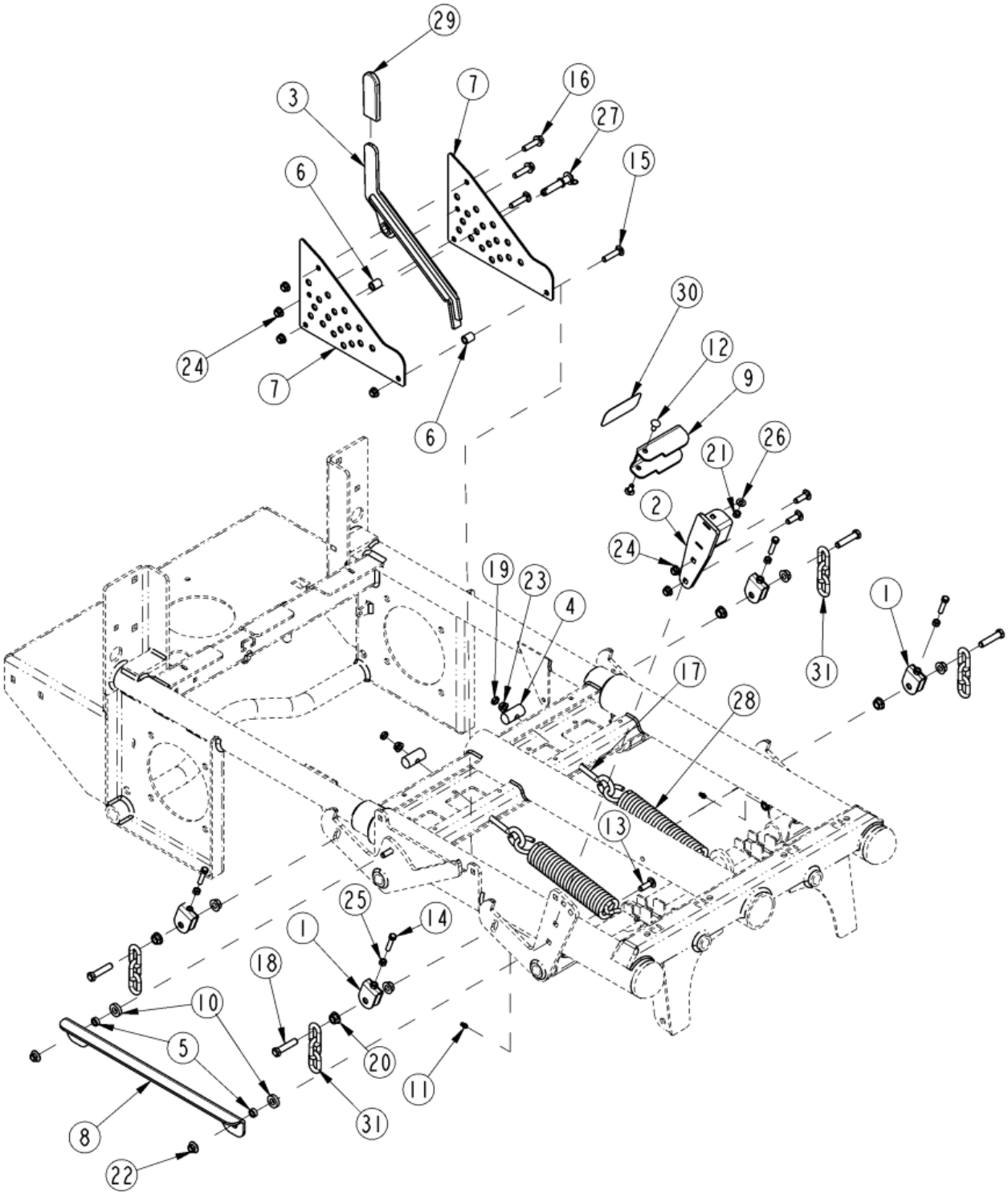

Deck Lift

Applies to Models: ACCU-Z ZT372, ACCU-Z ZT360

Ref.	Part No.	Part Description	Comments
	DWG35369	Drawing Image Number	
1	357-009H	YOKE AY, DECK LIFT ADJUSTING	
2	357-529H	PEDAL, DECK LIFT	
3	357-532H	TRANSPORT LOCK	
4	357-781D	BOLT ROCKER	
5	358-018D	SPACER, .385ID X 5/8OD X 1/4L	
6	358-022D	SPACER, .385ID X 5/8OD X .78L	
7	358-225D	PLATE, DECK HEIGHT STOP	
8	358-226D	PIVOT LINK, DECK LIFT	
9	358-230D	PEDAL, DECK LIFT	
10	358-372D	SPACER 1OD X 1/2ID X .25	
11	800-080C	GREASE ZERK 1/4-28 THD FORMING	
12	802-092C	RHSNB 5/16-18X3/4 GR5	
13	802-155C	RHSNB 3/8-16X1 1/4 GR5	
14	802-179C	HHCS 5/16-18X1 1/2 GR5 FTHD	
15	802-252C	RHSNB 3/8-16X1 3/4 GR5	
16	802-569C	HFSS 3/8-16X1 1/2 GR5	
17	802-674C	CLOSED EYE BOLT 3/8-16X4 1/2	
18	802-814C	HHCS 7/16-14X2 GR5 FTHD	
19	803-012C	NUT HEX JAM 3/8-16 PLT	
20	803-052C	NUT HEX WHIZ 7/16-14 PLT	
21	803-084C	NUT HEX NYLOCK 5/16-18 PLT	
22	803-086C	NUT MAC-LOK FLG 3/8-16 GR F	
23	803-198C	NUT HEX WHIZ 3/8-16 PLT	
24	803-209C	NUT FLANGE LOCK 3/8-16 PLT	
25	803-275C	NUT HEX 5/16-18 GR8 PLT	
26	804-036C	WASHER FLAT 5/16 SAE PLT	
27	805-438C	PIN,1/2X1 1/2 USABL PUSH DTENT	
28	807-308C	SPRING EXT 1.875D X .312 X11.5	
29	817-246C	GRIP HANDLE .84 ID X 4 LG	
30	840-333C	TREAD, DECK LIFT PEDAL	
31	890-907C	CHAIN, 5/16 LONG LINK PROOF 3X	

Electrical Components

Applies to Models: ACCU-Z ZT372, ACCU-Z ZT360

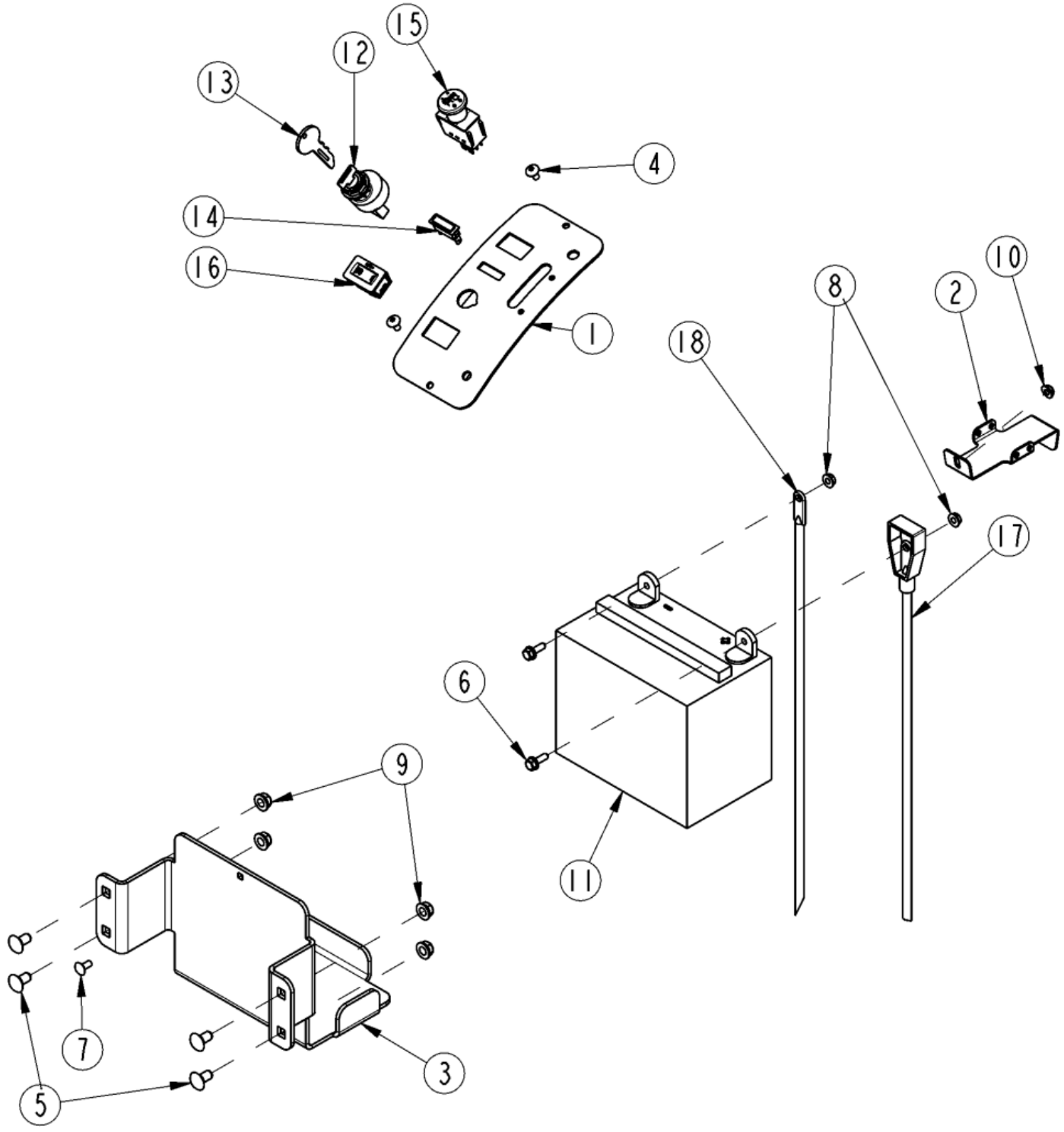

Electrical Components

Applies to Models: ACCU-Z ZT372, ACCU-Z ZT360

Ref.	Part No.	Part Description	Comments
	DWG35363	Drawing Image Number	
1	357-112D	PANEL, CONTROL	
2	358-046D	BATTERY HOLD-DOWN	
3	358-365D	BATTERY BRACKET	
4	801-198C	TTHMS 1/4-20X1/2 ZNYCR	
5	802-149C	RHSNB 3/8-16X3/4 GR5	
6	802-257C	HFSS 1/4-20X3/4 GR5	
7	802-633C	RHSNB 1/4-20X5/8 PLT	
8	803-194C	NUT HEX WHIZ 1/4-20 PLT	
9	803-209C	NUT FLANGE LOCK 3/8-16 PLT	
10	803-293C	NUT HEX FLG TL 1/4-20 ZNYCR	
11		BATTERY 12V 300CCA	UL1-HD (245 CCA) or UL1-X (300 CCA) B.C.I. Group Size U1/U1R Buy Locally
12	833-336C	IGNITION SWITCH W/2 KEYS(6PIN)	
13	833-342C	KEY W/SHIELD (RP FOR 833-336C)	
14	833-350C	LIGHT, 14V INDICATOR	
15	833-351C	BLADE SWITCH	
16	833-352C	HOUR METER	
17	833-629C	BATTERY CABLE 6GA RED 52	
18	833-630C	BATTERY CABLE 6GA BLACK 52	

Electrical Wiring Schematic Kawasaki Engine

Applies to Models: ACCU-Z ZT372, ACCU-Z ZT360

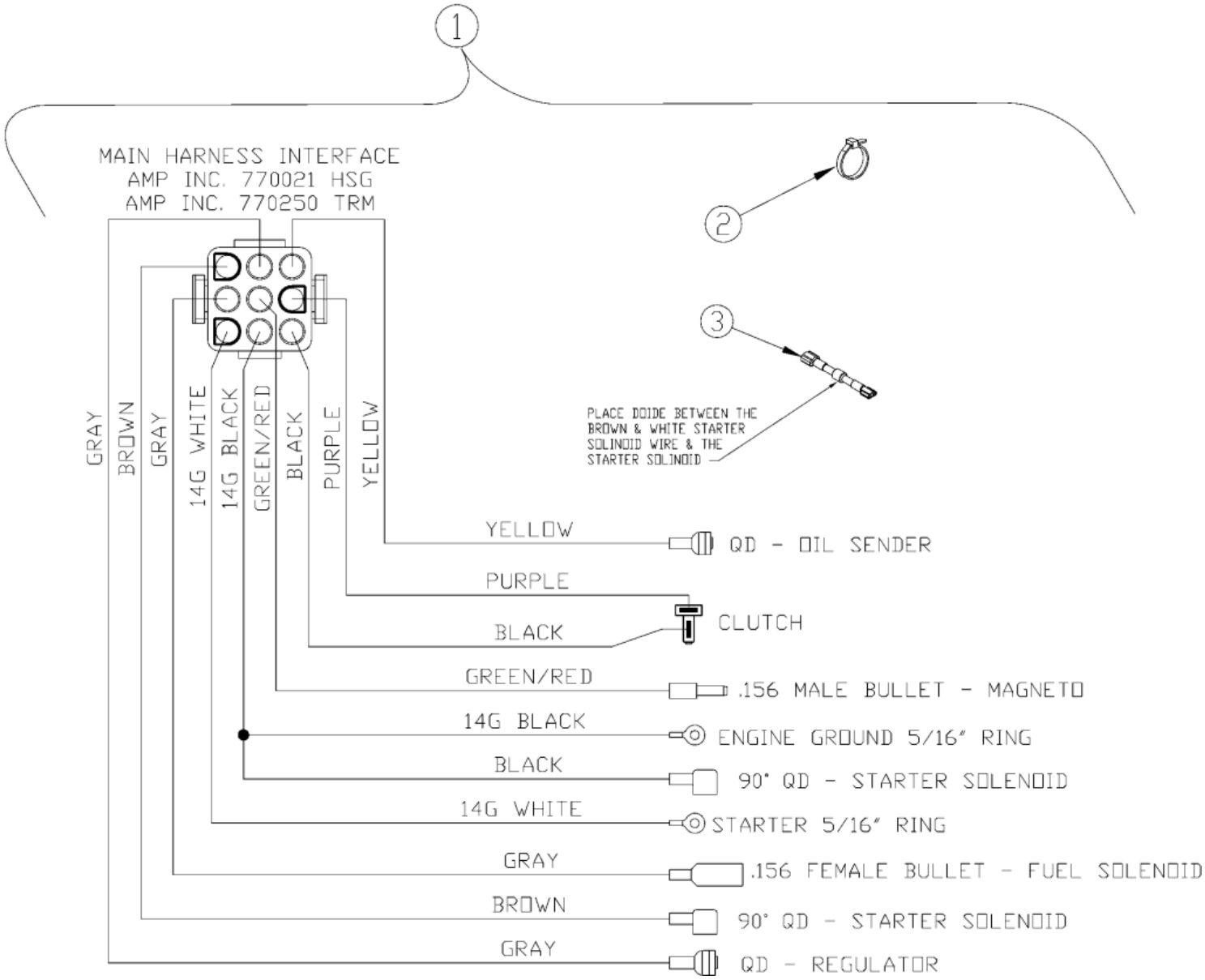

Electrical Wiring Schematic Kawasaki Engine

Applies to Models: ACCU-Z ZT372, ACCU-Z ZT360

Ref.	Part No.	Part Description	Comments
	DWG27824	Drawing Image Number	
1	833-506C	HARNESS ASY, KAW RAZOR ENG	
2	800-303C	CABLE TIE 2 DIA MIN - BLK	
3	833-465C	DIODE ASSY, STARTER	

Electrical Wiring Schematic Main Harness

Applies to Models: ACCU-Z ZT372, ACCU-Z ZT360

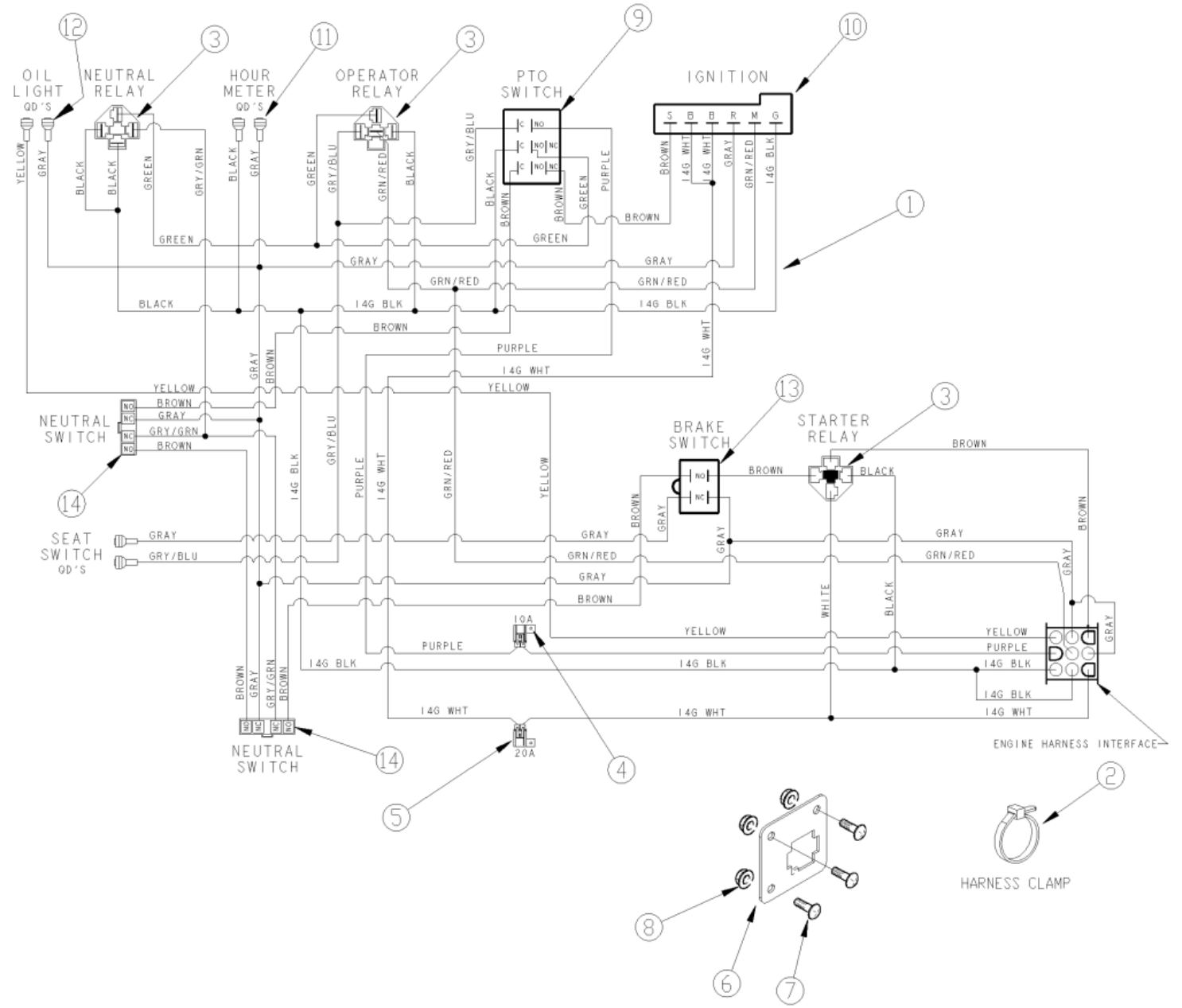

Electrical Wiring Schematic Main Harness

Applies to Models: ACCU-Z ZT372, ACCU-Z ZT360

Ref.	Part No.	Part Description	Comments
	DWG33800	Drawing Image Number	
1	833-558C	HARNESS ASSY, MAIN	
2	800-303C	CABLE TIE 2 DIA MIN - BLK	
3	0-332-209-150	RELAY BOSCH	
4	839-287C	10 AMP FUSE (5 PACK)	
5	839-288C	20 AMP FUSE (5 PACK)	
6	357-855D	PLATE, HARNESS MOUNT	
7	802-633C	RHSNB 1/4-20X5/8 PLT	
8	803-194C	NUT HEX WHIZ 1/4-20 PLT	
9	833-351C	BLADE SWITCH	
10	833-336C	IGNITION SWITCH W/2 KEYS(6PIN)	
11	833-352C	HOUR METER	
12	833-350C	LIGHT, 14V INDICATOR	
13	833-341C	SWITCH, 2-POLE 12V 5A PLUNGER	
14	833-503C	SWITCH, 2 POLE 12 V PLUNGER	

Transmission Components (831-089C & 831-090C)

Applies to Models: ACCU-Z ZT372, ACCU-Z ZT360

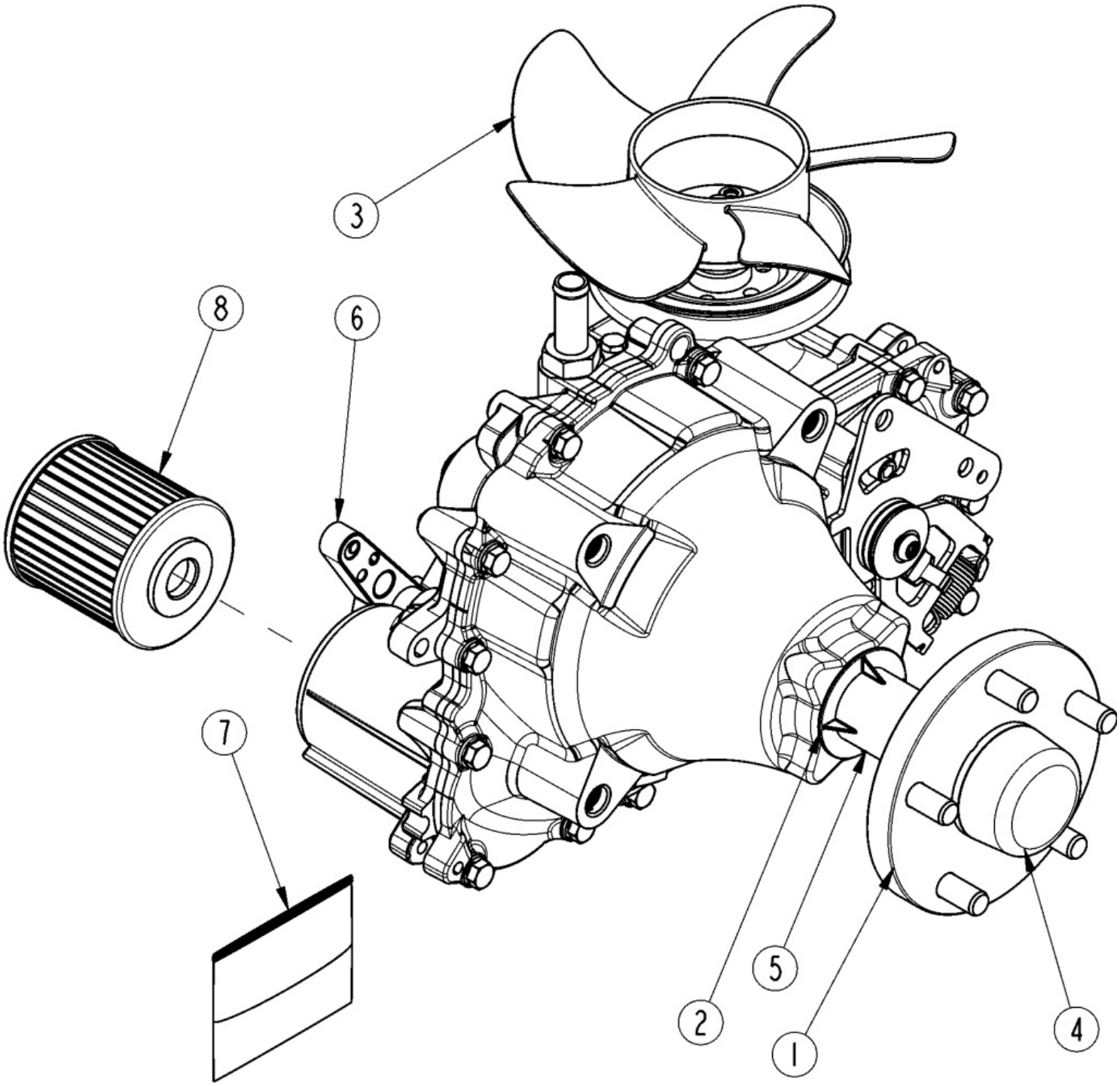

Transmission Components (831-089C & 831-090C)

Applies to Models: ACCU-Z ZT372, ACCU-Z ZT360

Ref.	Part No.	Part Description	Comments
	DWG33792	Drawing Image Number	
	831-089C	TRANSAXLE, RH	
	831-090C	TRANSAXLE, LH	
		*	
1	72039	HG HUB KIT	
2	53008	HG LIP SEAL	
3	71906	HG FAN & PULLEY KIT	
4	53724	HG AXLE CAP	
5	53367	HG AXLE TUBE	
6	53018	HG BRAKE ARM	
7	71945	HG SEAL KIT 831-089C/090C	
8	71943	HG OIL FILTER 831-089C/090C	

Transmission to Frame Assembly

Applies to Models: ACCU-Z ZT372, ACCU-Z ZT360

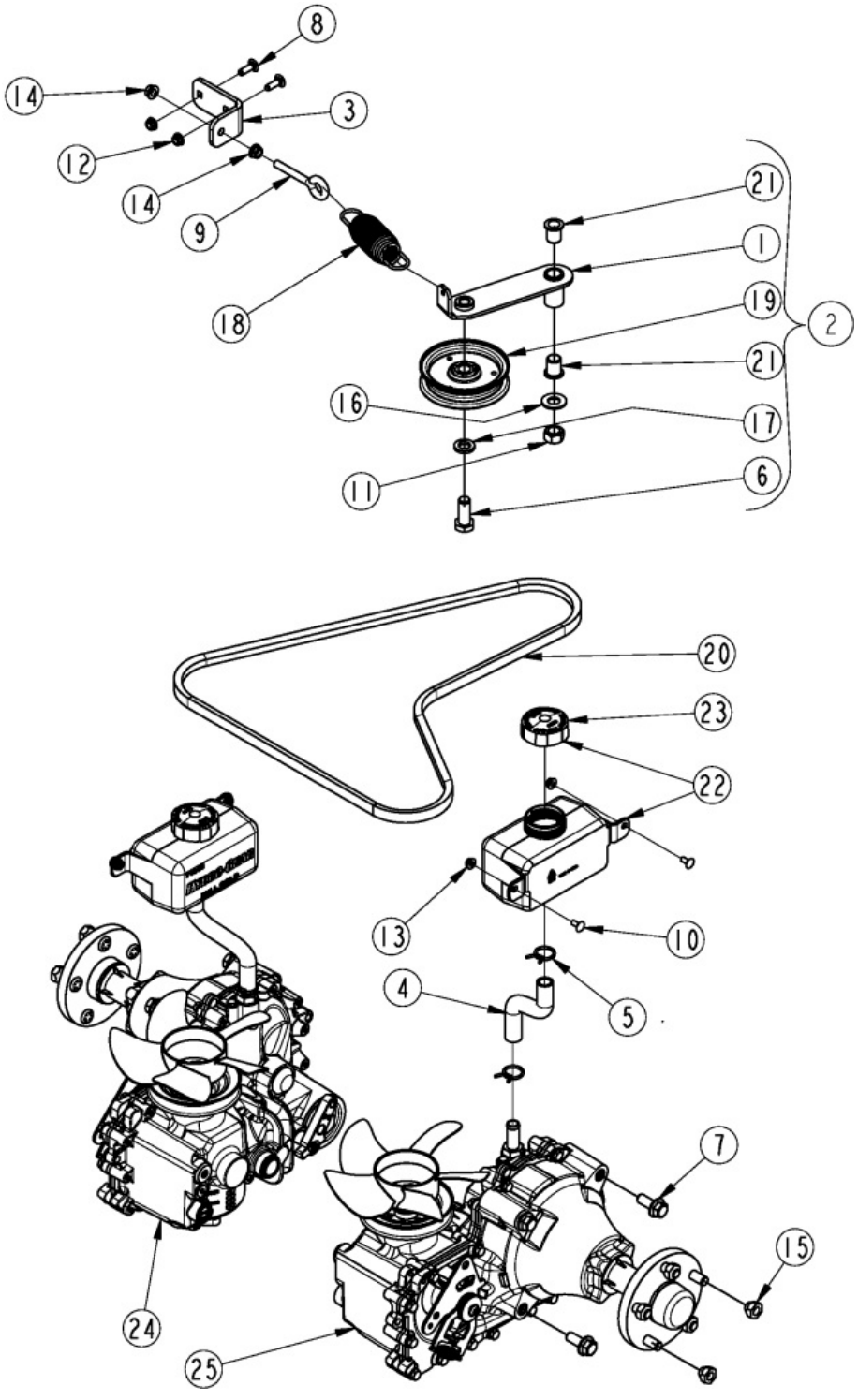

Transmission to Frame Assembly

Applies to Models: ACCU-Z ZT372, ACCU-Z ZT360

Ref.	Part No.	Part Description	Comments
	DWG 35364	Drawing Image Number	
1	357-518H	IDLER ARM	
2	357-519S	IDLER ARM, TENSIONER	
3	358-211D	SPRING TENSION BRACKET	
4	358-241D	HOSE, EXPANSION TANK	
5	800-029C	SINGLE WIRE HOSE CLAMP #14	
6	802-051C	HHCS 5/8-11X1 1/2 GR5	
7	802-083C	HFSS 1/2-13X1 1/4 GR8	
8	802-282C	RHSNB 5/16-18X1 GR5	
9	802-567C	SP EYE 3/8-16X 3 7/8	
10	802-633C	RHSNB 1/4-20X5/8 PLT	
11	803-024C	NUT LOCK 5/8-11 PLT	
12	803-043C	NUT HEX WHIZ 5/16-18 PLT	
13	803-194C	NUT HEX WHIZ 1/4-20 PLT	
14	803-198C	NUT HEX WHIZ 3/8-16 PLT	
15	803-159C	NUT LUG 1/2-20X60DEG PLT(.75AF	
15	803-329C	RPBY 803-159C	Obsolete
16	804-021C	WASHER FLAT 5/8 SAE PLT	
17	804-022C	WASHER LOCK SPRING 5/8 PLT	
18	807-242C	SPRING, EXT 1.5ODX5.85LX.148WD	
19	808-482C	FLAT IDLE PULLEY 4" FACE	(S/N 940613+)
19	808-384C	PULLEY,4.5ODX.631IDX.96W IDLER	(S/N 940612-)
20	816-780C	V-BELT, B-SEC, EL 68.02	
21	817-028C	DOUBLE DISK ARM PIVOT BUSHINGS	
22	817-911C	ASSY, EXPANSION TANK 1000ML	
23	817-912C	CAP, EXPANSION TANK	
24	831-089C	TRANSAXLE, RH	
25	831-090C	TRANSAXLE, LH	

Air Cleaner Kawasaki 27 HP

Applies to Models: ACCU-Z ZT372, ACCU-Z ZT360

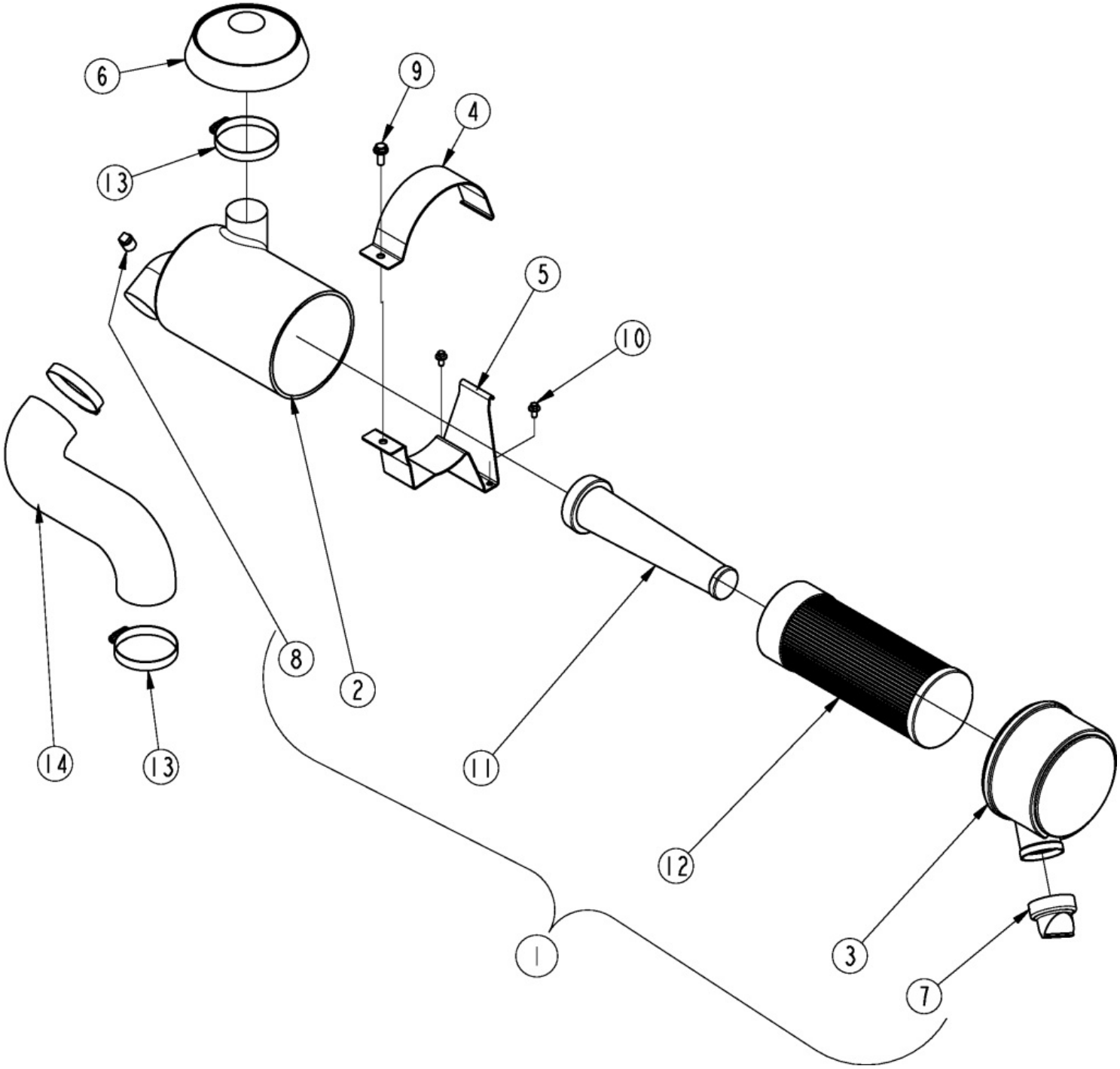

Air Cleaner Kawasaki 27 HP

Applies to Models: ACCU-Z ZT372, ACCU-Z ZT360

Ref.	Part No.	Part Description	Comments
	DWG 25858	Drawing Image Number	
1	11010-7020	KAW FILTER-ASSY, AIR	For Engine Model Code FX850V-AS09
1	11010-7028	KAW FILTER-ASSY, AIR	For Engine Model Code FX850V-BS09
2	11011-7047	KAW CASE-AIR FILTER	
3	11011-7050	KAW CASE-AIR FILTER	
4	11054-7013-9X	KAW BRACKET	Obsolete
5	11054-7016-9X	KAW BRACKET	Obsolete
6	11065-7017	RPBY 11065-7034	For Engine Model Code FX850V-AS09
6	11065-7025	KAWASAKI CAP AIR-CLEANER	(Obsolete) For Engine Model Code FX850V-BS09
7	11065-7008	KAWASAKI BURP CAP	Obsolete
8	11065-7009	KAWASAKI PLUG PLASTIC	
9	802-778C	HFS M8X1.25X20 GR.8.8 PLT	
10	802-846C	HFS M6X1X12 PLT	
11	839-973C	KAW SAFETY FILTER 11013-7039	
12	839-974C	KAW AIR FILTER 11013-7038	Obsolete
13	92171-7023	RPBY 92173-7011	For Engine Model Code FX850V-AS09
13	92171-7007	KAW CLAMP	For Engine Model Code FX850V-BS09
14	92192-7087	KAW TUBE	(Obsolete) For Engine Model Code FX850V-AS09
14	92192-7189	KAW TUBE	For Engine Model Code FX850V-BS09

Engine Assembly Kawasaki 27 HP

Applies to Models: ACCU-Z ZT372, ACCU-Z ZT360

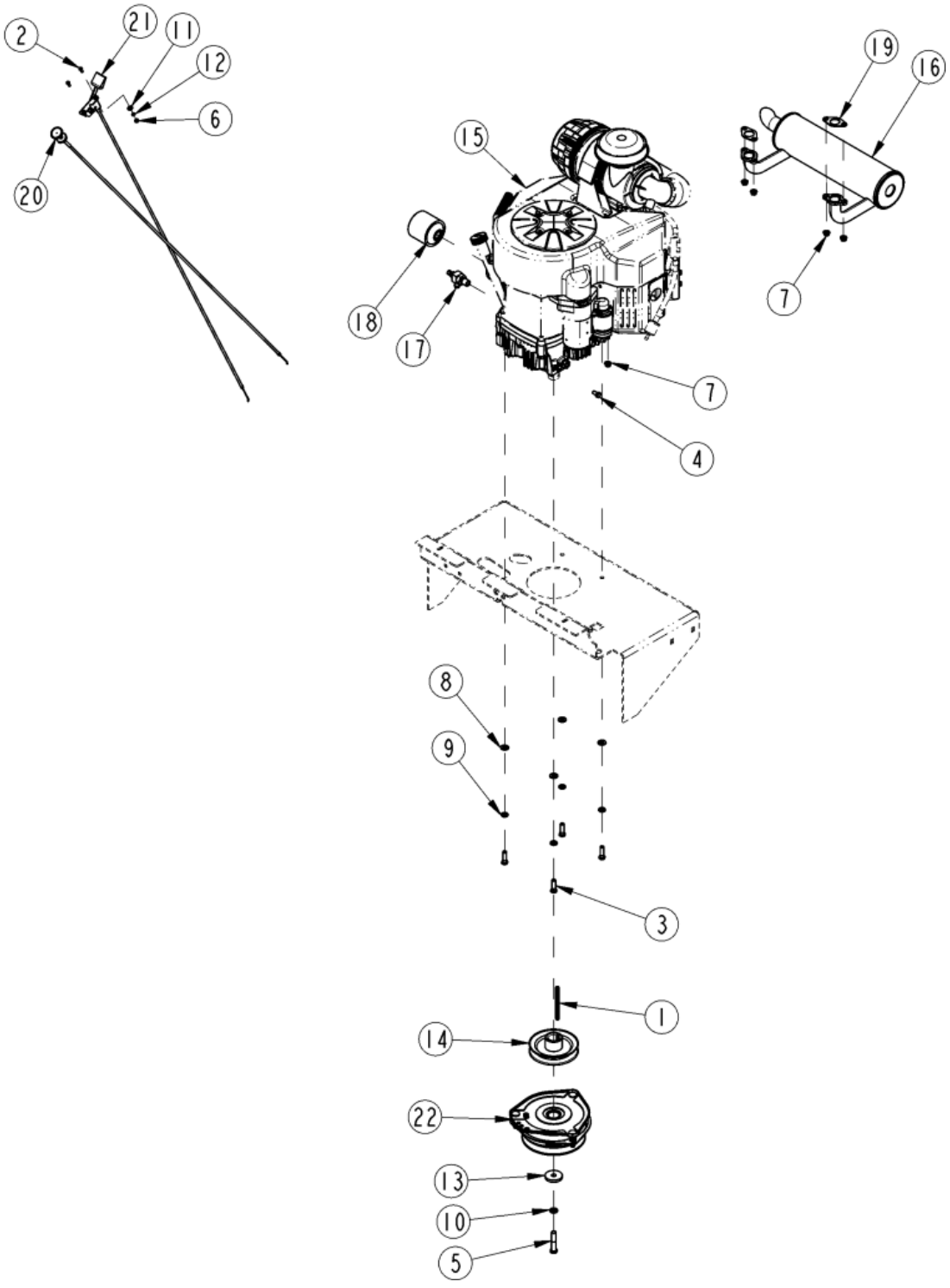

Engine Assembly Kawasaki 27 HP

Applies to Models: ACCU-Z ZT372, ACCU-Z ZT360

Ref.	Part No.	Part Description	Comments
	DWG 35422	Drawing Image Number	
1	358-283D	KEY, 1/4 X 1/4 X 4 LG	
2	801-205C	TPHMS Y #10-24 X 1/2 ZNYCR	
3	802-079C	HHCS 3/8-16X1 1/4 GR5	
4	802-459C	HHCS M8X1.25X16 GR8.8	
5	802-923C	HHCS 7/16-20X2 1/4 GR8	
6	803-001C	NUT HEX 10-24 PLT	
7	803-220C	NUT HEX FLANGE M8X1.25 PLT	
8	804-012C	WASHER FLAT 3/8 SAE PLT	
9	804-013C	WASHER LOCK SPRING 3/8 PLT	
10	804-014C	WASHER LOCK 7/16 PLT	
11	804-046C	WASHER FLAT #10 SAE PLT	
12	804-054C	WASHER LOCK #10	
13	804-231C	WASHER .460 X 1.75 X.25 PLT	
14	808-457C	PULLEY 5.25 PDX1.125 ID B-SEC	
15	826-616C	KAW, FX850V, 27HP	
16	826-619C	MUFFLER, 27/29/31 HP KAW	
17	829-128C	VALVE,20MM O-RING OIL DRAIN	
18	831-034C	ENGINE OIL FILTER Z KAW	Obsolete
19	839-049C	KAW (23) GASKET, MUFFLER	
20	890-106C	CABLE, 53X.062X1.87 CHOKE	
21	890-115C	CABLE, 50X.062X2.12 THROTTLE	
22	891-404C	CLUTCH.12 V 6.5 PULLEY	

Fuel System

Applies to Models: ACCU-Z ZT372, ACCU-Z ZT360

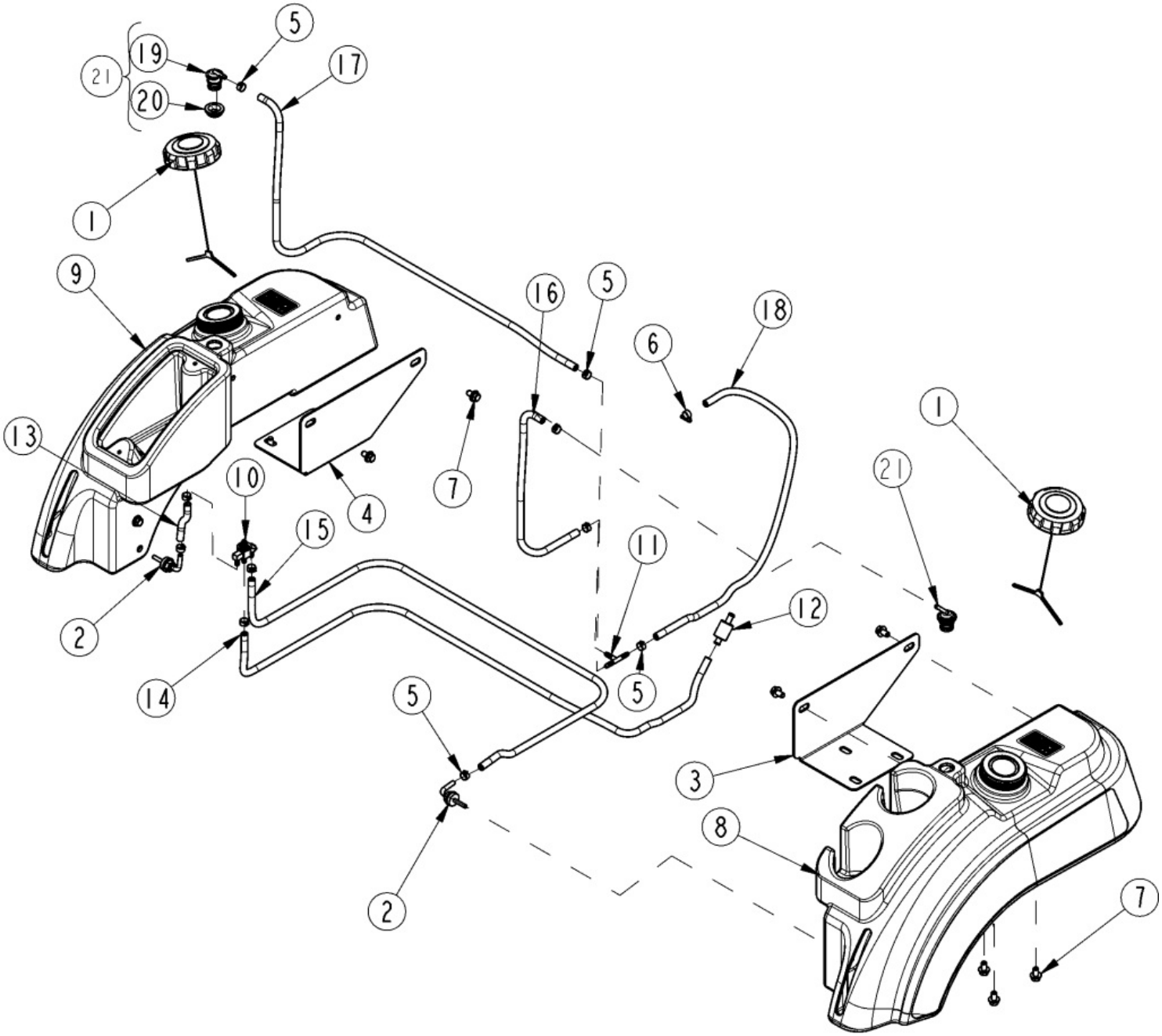

Fuel System

Applies to Models: ACCU-Z ZT372, ACCU-Z ZT360

Ref.	Part No.	Part Description	Comments
	DWG 35365	Drawing Image Number	
1	204184	CAP,NON-VENTED FUEL	S/N 1030665+
1	203238	RPBY 204184	(Obsolete) S/N 1030664- Use up inventory
2	356-137S	GAS TANK FITTING W/NUT&WASHER	
3	358-284D	TANK SUPPORT, LH	
4	358-285D	TANK SUPPORT, RH	
5	800-356C	RPBY 800-395C	Obsolete
6	800-412C	CLAMP WRM DRV (.21-.63)	
7	802-732C	HFSS 3/8-16X5/8 GR5 ZNYCR	
8	817-995C	LH FUEL TANK, RED, COMPLIANT	
9	817-996C	RH FUEL TANK, RED, COMPLIANT	
10	829-129C	VALVE,FUEL SELECTOR	
11	830-009C	TEE 1/4HB POLYPROP	
12	831-031C	FUEL FILTER Z	
13	990-225R	HOSE RUBBER.25ID/.5 OD SAE30R7	
14	990-225R	HOSE RUBBER.25ID/.5 OD SAE30R7	
15	990-225R	HOSE RUBBER.25ID/.5 OD SAE30R7	
16	990-225R	HOSE RUBBER.25ID/.5 OD SAE30R7	
17	990-225R	HOSE RUBBER.25ID/.5 OD SAE30R7	
18	990-225R	HOSE RUBBER.25ID/.5 OD SAE30R7	
19	AO-6890	RPBY 357-501A	(Obsolete) S/N 795254-
20	GAR-1330	RPBY 357-501A	(Obsolete) S/N 795254-
21	357-501A	SV KIT, EPA VALVE & GROMMET	S/N 795255+

Drive Wheels

Applies to Models: ACCU-Z ZT372

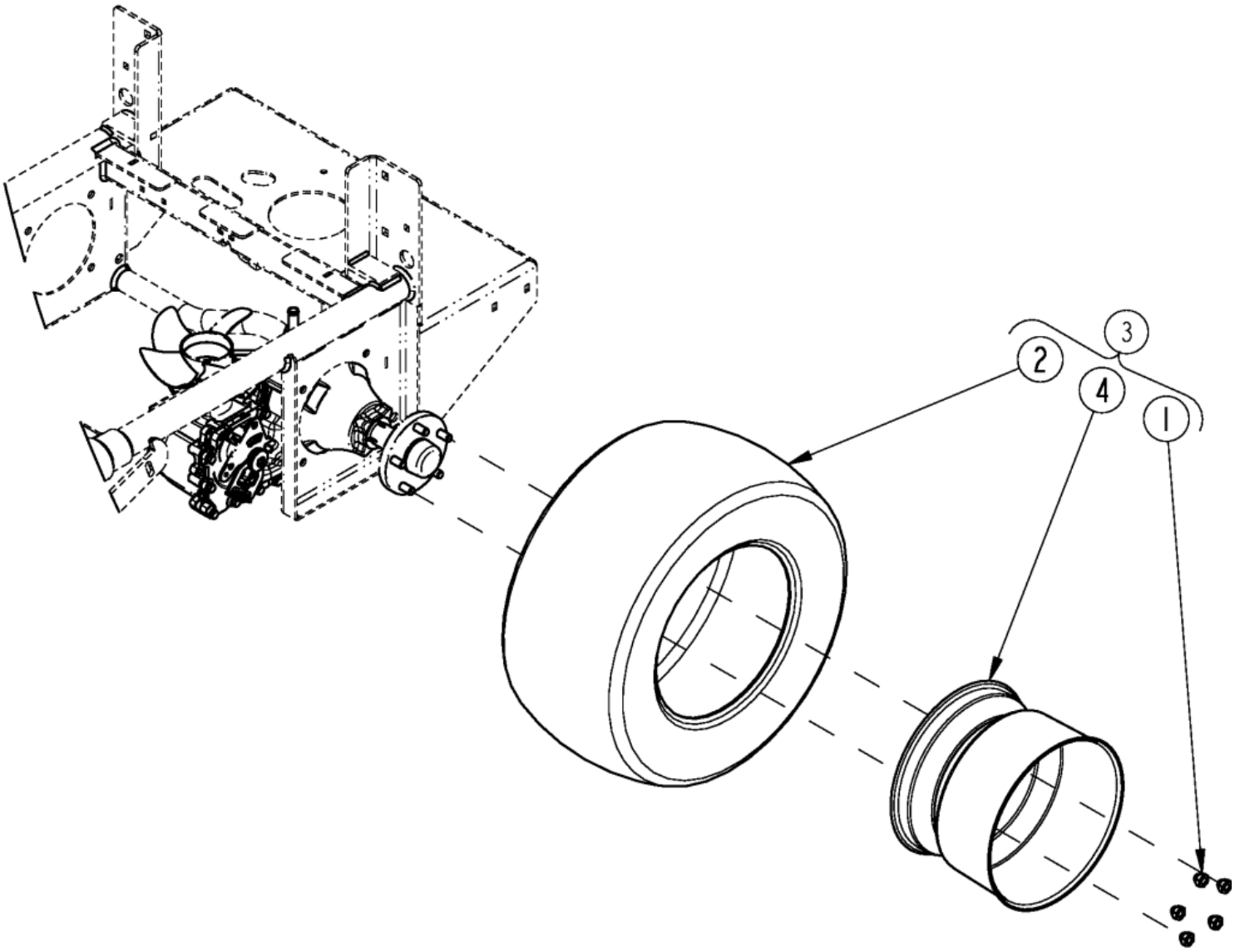

Drive Wheels

Applies to Models: ACCU-Z ZT372

Ref.	Part No.	Part Description	Comments
	DWG 35366	Drawing Image Number	
1	803-159C	NUT LUG 1/2-20X60DEG PLT(.75AF	
1	803-329C	RPBY 803-159C	Obsolete
2	814-310C	TURF TIRE 24X12	
3	814-484C	TIRE/WHL 2" OFFSET 24X12 TURF	S/N 843795+
3	814-305C	TIRE/WHL,24X12.00-12 4PR TURF	S/N 843794-
4	814-485C	WHEEL/RIM 12" W/ 2" OFFSET	S/N 843795+
4	30-449S6B	TILDEN RIM 12X8.50,8SPOKED BLK	
4	814-311C	RPBY 30-449S6B	(Obsolete) S/N 843794-

Drive Wheels

Applies to Models: ACCU-Z ZT360

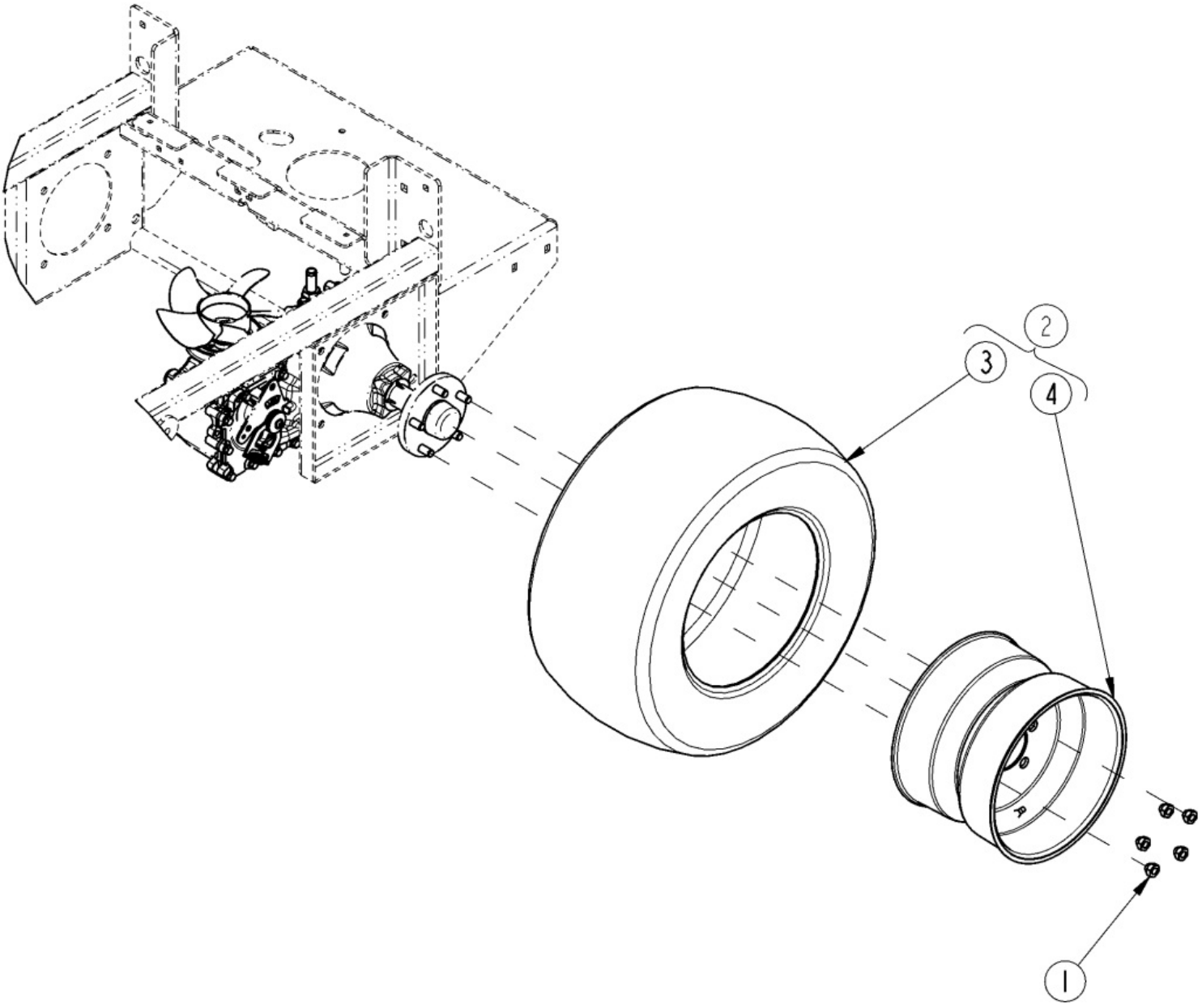

Drive Wheels

Applies to Models: ACCU-Z ZT360

Ref.	Part No.	Part Description	Comments
	DWG 33795	Drawing Image Number	
1	803-159C	NUT LUG 1/2-20X60DEG PLT(.75AF	
1	803-329C	RPBY 803-159C	Obsolete
2	814-305C	TIRE/WHL,24X12.00-12 4PR TURF	
2	814-484C	TIRE/WHL 2" OFFSET 24X12 TURF	
3	814-310C	TURF TIRE 24X12	
4	30-449S6B	TILDEN RIM 12X8.50,8SPOKED BLK	
4	814-311C	RPBY 30-449S6B	Obsolete
4	814-485C	WHEEL/RIM 12" W/ 2" OFFSET	

Front Caster Wheel

Applies to Models: ACCU-Z ZT372, ACCU-Z ZT360

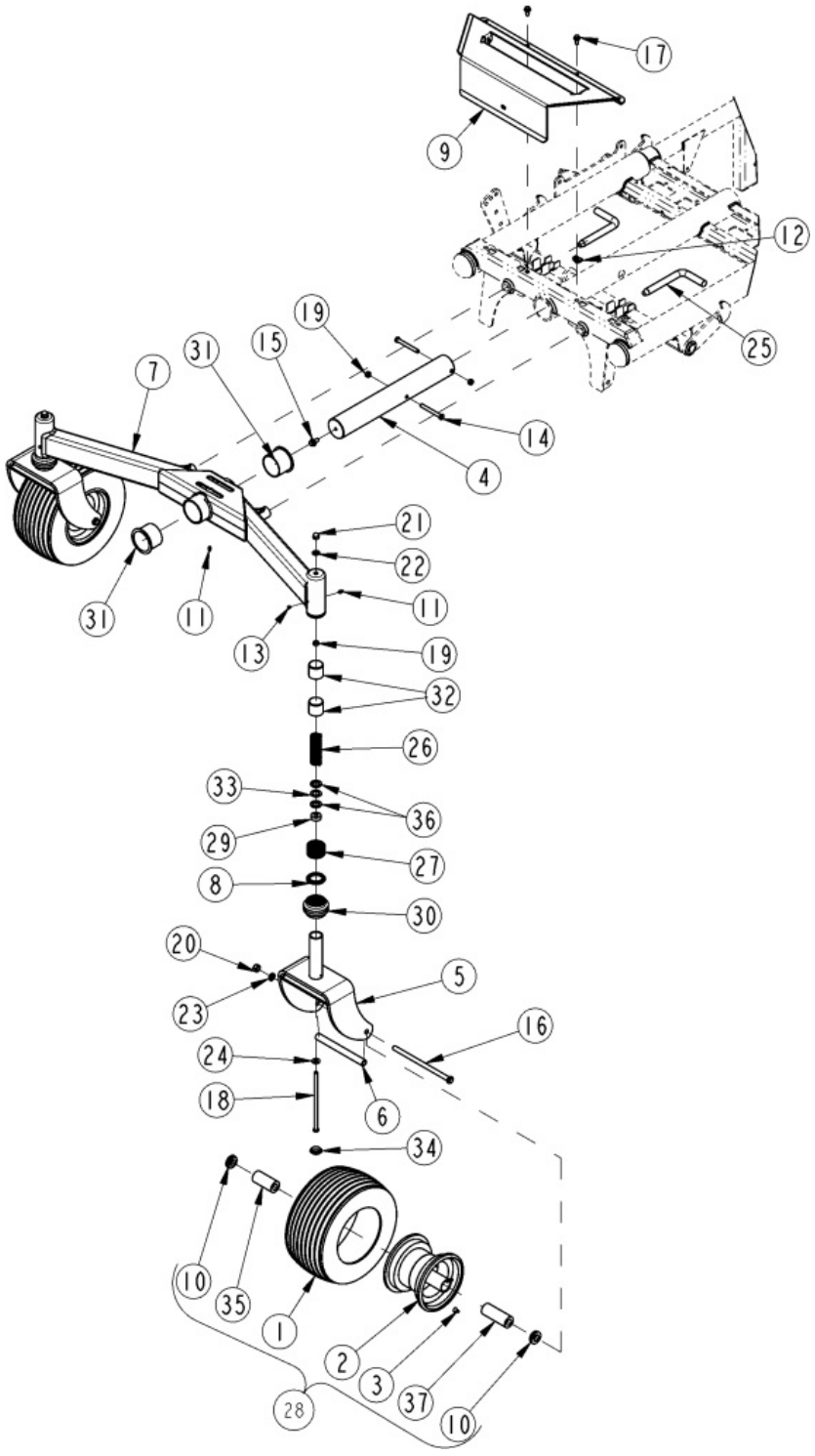

Front Caster Wheel

Applies to Models: ACCU-Z ZT372, ACCU-Z ZT360

Ref.	Part No.	Part Description	Comments
	DWG 35366	Drawing Image Number	
1	5181861	CARLISLE TIRE 13 X 6.5-6 4PLY	
2	814-323C	RIM 6.50X6	
3	TR-412	T1. VALVE MARTIN	
4	357-234D	SHAFT, AXLE PIVOT	
5	357-384H	FORK ASM,ZT TELE-CASTER	
6	357-487D	TUBE,CASTER WHEEL AXLE	
7	357-603H	PIVOTING AXLE	
8	357-870D	COLLAR,BELLOWS RETAINING	
9	358-390D	BRACKET,FLOOR PAN ATTACHMENT	
10	53-164	TILDEN RTNR 3/4IDX1 3/8OD	
11	800-001C	GREASE ZERK STRAIGHT 1/4-28	
12	800-120C	NUT CLIP U-TYPE 5/16-18	
13	801-229C	SCREW SLOTTED HEX 1/4-28X3/16	
14	802-168C	HHCS 3/8-16X3 1/4 GR5	
15	802-185C	HFSS 3/8-16X3/4 GR5	
16	802-269C	HHCS 1/2-13X9 GR5	
17	802-387C	HFS 5/16-18X3/4 GR5	
18	802-900C	HHCS 3/8-16X8 GR5 ZNYCR	
19	803-013C	NUT LOCK 3/8-16 PLT	
20	803-020C	NUT HEX 1/2-13 PLT	
21	803-380C	NUT,3/8-16 PLT REGULAR ACORN	
22	804-012C	WASHER FLAT 3/8 SAE PLT	
23	804-015C	WASHER LOCK SPRING 1/2 PLT	
24	804-136C	WASHER FLAT 3/8 NEOPRENE PLT	
25	805-494C	PIN BENT .75X5.50 USBL	
26	807-293C	SPRING,1.122X.207WX5.0L COMP	
27	807-296C	SPRING,1.96X.100X3.19L	
28	814-304C	TIRE/WHL,13X6.50-6NHS 4PR RIB	
29	816-645C	SPRING,1.13X.50X.44T URETHANE	
30	816-649C	BELLOWS,2.00 ID X 1.68L	
31	817-684C	BSHG FLG 2.50IDX2.69ODX2.00L	
32	817-843C	BEARING,1.50X1.65X1.50L SLEEVE	
33	817-844C	BEARING,1.25X.75X.06T THRUST	
34	817-845C	PLUG,1.00X.80-.20 HOLE	
35	822-223C	BRG .75X1.38X3.00L ROLLER	
36	822-247C	RACE,1.25X.75X.13T BRG	
37	822-222C	BRG,.75X1.38X3.75L ROLLER	

Deck Assembly

Applies to Models: ACCU-Z ZT372, ACCU-Z ZT360

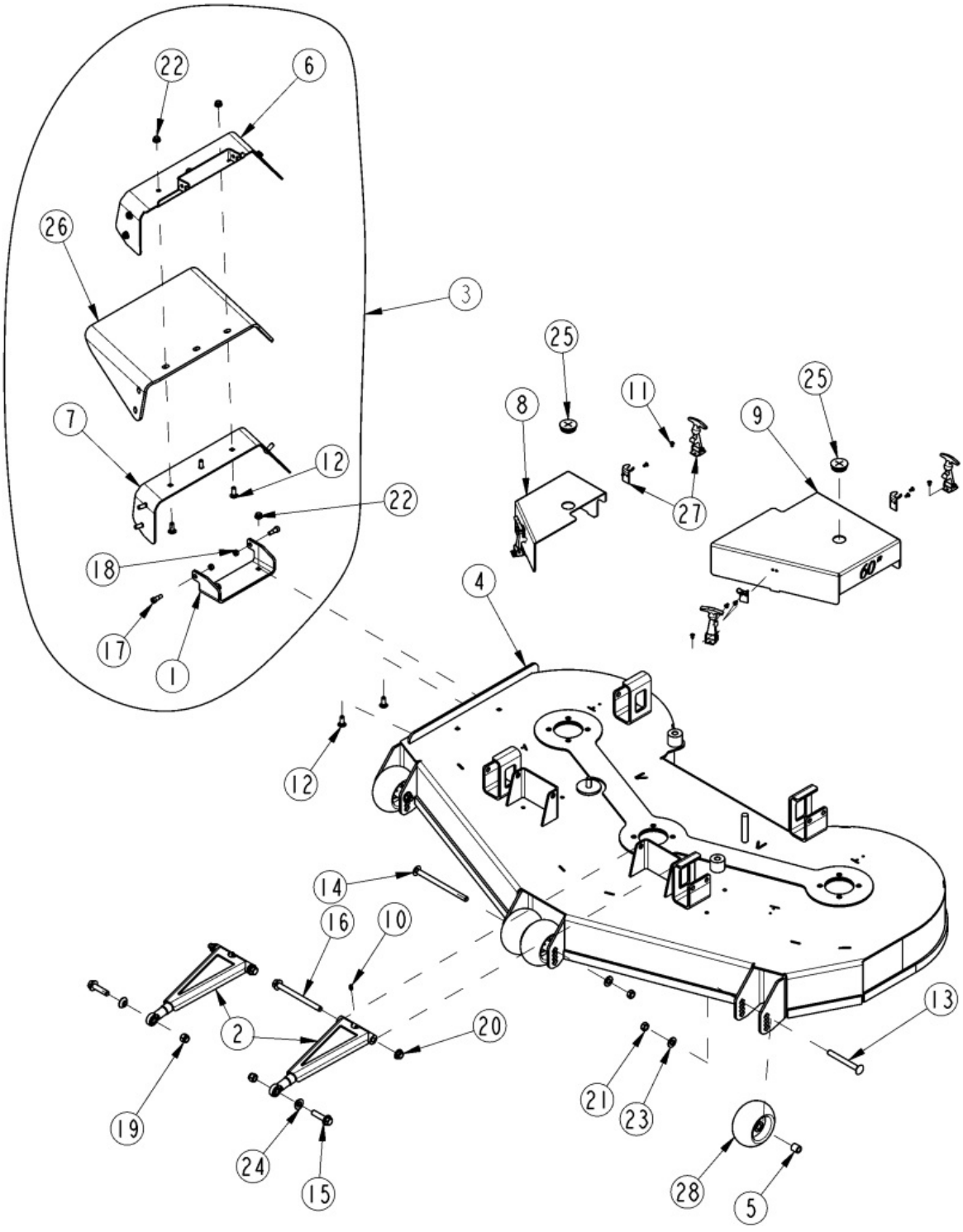

Deck Assembly

Applies to Models: ACCU-Z ZT372, ACCU-Z ZT360

Ref.	Part No.	Part Description	Comments
	DWG 12345	Drawing Image Number	
1	357-282D	CHUTE BRACKET	
2	357-544H	STRUT	
3	357-545S	DECK CHUTE ASSY	
4	357-605H	DECK WELDMENT, 60	
4	357-607H	DECK WELDMENT, 72	
5	357-722D	SPACER 3/4OD X 11GA WL X 3/4L	
6	358-253D	CHUTE BRACKET, TOP	
7	358-254D	CHUTE BRACKET, BOTTOM	
8	358-272D	BELT GUARD, RIGHT, 60	
8	358-256D	BELT GUARD, RIGHT, 72	
9	358-385D	BELT GUARD, LEFT, 60	
9	358-388D	BELT GUARD, LEFT, 72	
10	800-080C	GREASE ZERK 1/4-28 THD FORMING	
11	800-219C	RIVET POP 3/16 .126-.250	
12	802-015C	RHSNB 3/8-16X1 GR5	
13	802-137C	RHSNB 1/2-13X4 1/2 GR8 PLT	
14	802-218C	RHSNB 1/2-13X7 1/4 GR5 SPTHD	
15	802-456C	HFS 1/2-13X2 GR8	
16	802-745C	HFS 1/2-13X6 1/8GR5 PLT	
17	802-794C	SHOULDER BOLT 3/8X1/2X5/16-18	
18	803-084C	NUT HEX NYLOCK 5/16-18 PLT	
19	803-147C	NUT HEX NYLOCK 1/2-13	
20	803-169C	NUT HEX FLG LOCK 1/2-13 PLT	
21	803-178C	NUT NYLOCK JAM NUT 1/2-13	
22	803-209C	NUT FLANGE LOCK 3/8-16 PLT	
23	804-016C	WASHER FLAT 1/2 SAE PLT	
24	804-154C	WASHER POWDER METAL CONE 1/2	
25	816-298C	RUBBER PLUG 1 3/8 W/CROSS SLIT	
26	816-537C	CHUTE, RUBBER DISCHARGE	
27	816-712C	RUBBER LATCH 37-10-086-20	
28	817-581C	WHEEL, ANTI SCALP	

Deck Pulleys & Drive Belt

Applies to Models: ACCU-Z ZT372, ACCU-Z ZT360

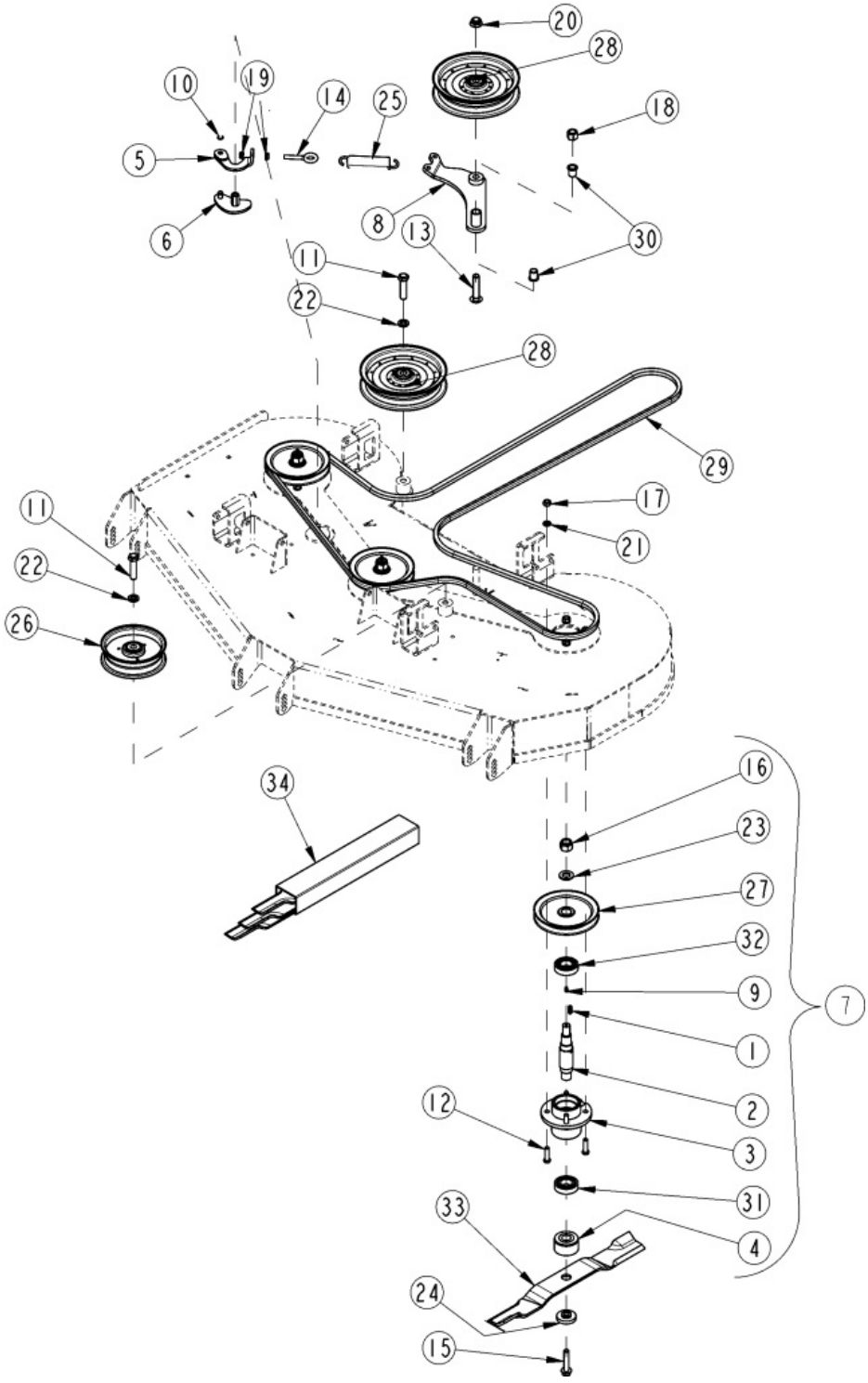

Deck Pulleys & Drive Belt

Applies to Models: ACCU-Z ZT372, ACCU-Z ZT360

Ref.	Part No.	Part Description	Comments
	DWG35368	Drawing Image Number	
1	172-242D	1/4 SQ. KEY X 7/8 LG	
2	310-630D	BLADE SPINDLE SHAFT CW TG	
3	357-279D	BLADE HUB BOTTOM MOUNT	
4	357-280D	BLADE HUB - 7/8 (PLATED) 1.29T	
5	357-615H	OVER CENTER LATCH	
6	357-616H	OVER CENTER LATCH PIVOT	
7	357-618S	CW HUB ASSY BTM MNT 6 3/4 PULL	ZT360
7	357-622S	CW HUB ASSY BTM MNT 8" PULL	ZT372
8	357-619H	LEVER AY, BELT TENSION IDLER	
9	800-001C	GREASE ZERK STRAIGHT 1/4-28	
10	800-099C	SNAP RING EXT 7/16	
11	802-058C	HHCS 5/8-11X2 1/2 GR5	
12	802-229C	HHCS 7/16-20X1 1/2 GR8	
13	802-338C	RHSNB 5/8-11X3 GR5	
14	802-884C	CLOSED EYE BOLT 3/8-16X3	ZT360
14	802-567C	SP EYE 3/8-16X 3 7/8	ZT372
15	802-698C	HFS 1/2-20X2 1/2 GR8	
16	803-114C	NUT LOCK 3/4-16 NYLOC COLLAR	
17	803-115C	NUT HEX 7/16-20 PLT	
18	803-119C	NUT LOCK 5/8-18 NYLOK COLLAR P	
19	803-198C	NUT HEX WHIZ 3/8-16 PLT	
20	803-263C	NUT HEX FLANGE LOCK 5/8-11 PLT	
21	804-014C	WASHER LOCK 7/16 PLT	
22	804-022C	WASHER LOCK SPRING 5/8 PLT	
23	804-093C	WASHER FLAT 3/4 HARD ASTMF436	
24	804-110C	WASHER BLADE 2ODX.56THKX.51ID	
25	807-068C	SPRING EXT BELT HANDLE	
26	808-414C	FLAT IIDLER PULLEY, 6.75 O.D.	
27	808-458C	B-GROOVE PULLEY 6 3/4 O.D.	ZT360
27	808-459C	B-GROOVE PULLEY 8 O.D.	ZT372
28	808-107C	PULLEY IDLER 9 OD	
29	816-782C	V-BELT, B-SEC, EL 175.90	ZT360
29	816-781C	V-BELT, B-SEC, EL 199.73	ZT372
30	817-028C	DOUBLE DISK ARM PIVOT BUSHINGS	
31	822-006C	BRG BALL 30IDX62OD 206	
32	822-161C	BRG 1.18IDX2.44OD 6206 W/SHLD	
33	891-428C	MWR BLD 1/4X20.91 HL CW	ZT360
33	890-204C	MWR BLD 5/16X20 29/32SD LL CW	ZT360
33	890-702C	MWR BLD MULCH 1/4X20.91SD CW	ZT360
33	890-952C	MWR BLD 1/4X25 SD ML CW FUSION	ZT372
33	890-200C	MWR BLD 5/16 X 25SD LL CW	ZT372
33	890-698C	MWR BLD MULCH 1/4X25SD CW	ZT372
34	357-628A	60" MWR BLADE KIT, MED LIFT	ZT360
34	310-466A	60" MWR BLADE KIT, LOW LIFT	ZT360
34	310-469A	60" MWR BLADE KIT, MULCH	ZT360
34	357-629A	72" MOWER BLADE KIT, MED LIFT	ZT372
34	310-470A	72" MOWER BLADE KIT, LOW LIFT	ZT372
34	310-473A	72" MOWER BLADE KIT, MULCH	ZT372

Decal Placement

Applies to Models: ACCU-Z ZT372, ACCU-Z ZT360

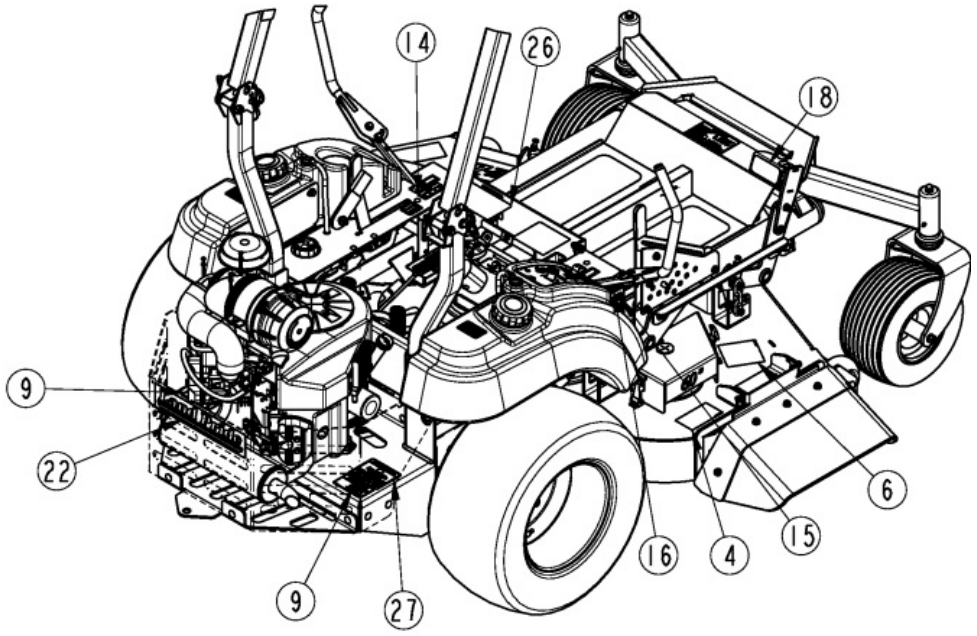

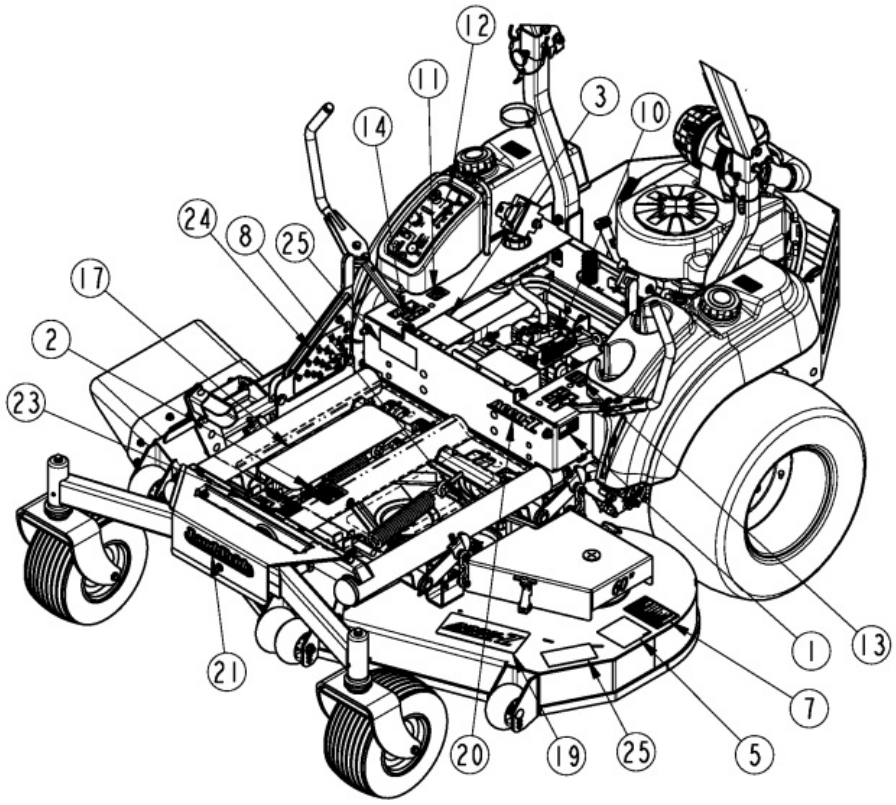

Decal Placement

Applies to Models: ACCU-Z ZT372, ACCU-Z ZT360

Ref.	Part No.	Part Description	Comments
	DWG 35370	Drawing Image Number	
1			
2	818-543C	DECAL DANGER PD GUARD MISS SML	
3	838-303C	DECAL DANGER BATTERY	
4	838-306C	DECAL WARNING THRWN OBJ HAZARD	
5	838-307C	DECAL MOVING PART HAZARD	
6	838-308C	DECAL ROTATING BLADE HAZARD	
7	838-310C	DECAL WARNING GEN SAFE MOWER	
8	838-328C	DECAL BELT ROUTING	
9	838-444C	DECAL DANGER HOT	
10	838-764C	DECAL BATTERY DISCONNECT	
11	838-785C	DECAL FUEL SELECTOR 3 WAY	
12	838-811C	DECAL, RAZOR 2 CONTROL PANEL	
13	838-812C	DECAL, PARK LEVER OPERATION	
14	838-814C	DECAL, STEERING CONTROL	
15	838-815C	DECAL, ROLLOVER HAZARD	
16	838-829C	DECAL,CAUTION DO NOT PWR WASH	
17	840-262C	TREAD, FLOOR PANEL	
18	840-333C	TREAD, DECK LIFT PEDAL	
19	840-335C	TREAD, ACCU Z	
20	848-028C	DECAL ACCU Z TAN	
21	848-159C	DECAL LANDPRIDE 10" BROWN/GOLD	
22	848-161C	DECAL LANDPRIDE 13.25 BRWN/GLD	
23	848-268C	DECAL,ZXT OPERATING	
24	848-799C	DECAL, DECK CUTTING HEIGHT	
25	858-040C	DECAL ZT360	
25	858-041C	DECAL ZT372	
26	858-077C	DECAL, ZT3 SERVICE PARTS	
27	858-337C	DECAL EPA ZMOWERS 2015	S/N 1012219- Obsolete
27	858-677C	DECAL EPA ZMOWERS 2016	S/N 1012220 to 1048120 Obsolete
27	858-874C	DECAL EPA ZMOWERS 2017	S/N 1048121+

Touch-up Paints - LP

Applies to Models: ACCU-Z ZT372, ACCU-Z ZT360

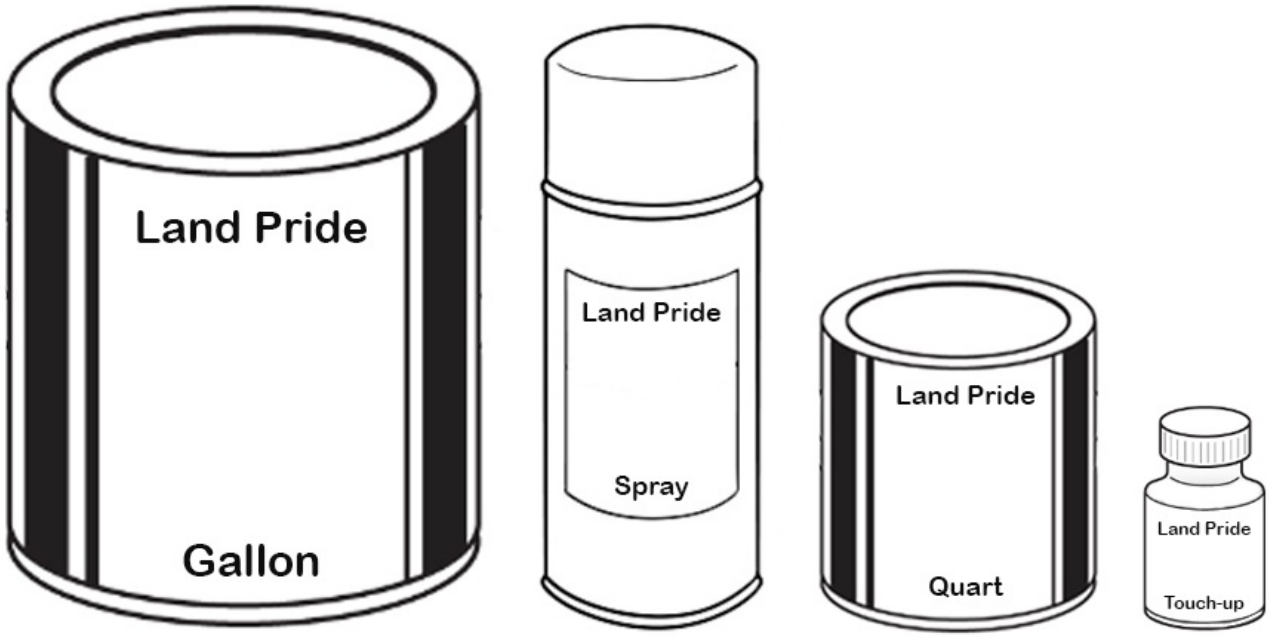

Touch-up Paints - LP

Applies to Models: ACCU-Z ZT372, ACCU-Z ZT360

Ref.	Part No.	Part Description	Comments
	DWG 76585	Image No.	
	821-011C	PAINT LP BEIGE SPRAY CAN	Beige spray can
	821-070C	PAINT GP GLOSS BLACK SPRAY CAN	Black spray can
	821-054C	PAINT MED. RED SPRAY TRCK/CTR	Red spray can
	821-058C	PAINT GREEN SPRAY CUTTERS	Green spray can
	821-066C	PAINT ORANGE SPRAY CAN	Orange spray can
	821-067C	PAINT BLUE SPRAY CAN	Blue spray can
	821-080C	PAINT ALUMINUM/ZINC SPRAY CAN *	Aluminum/Zinc spray can
	821-011CTU	PAINT LP BEIGE TOUCH-UP 4OZ	Beige touch-up bottle with brush
	821-070CTU	PAINT GLOSS BLACK TOUCH-UP 4OZ	Black touch-up bottle with brush
	821-054CTU	PAINT MED RED TOUCH-UP 4OZ	Red touch-up bottle with brush
	821-058CTU	PAINT GREEN TOUCH-UP 4OZ	Green touch-up bottle with brush
	821-066CTU	PAINT ORANGE TOUCH-UP 4OZ	Orange touch-up bottle with brush
	821-067CTU	PAINT BLUE TOUCH-UP 5OZ	Blue touch-up bottle with brush
	821-080CTU	PAINT ALUMINUM/ZINC TOUCH UP *	Aluminum/Zinc touch-up bottle with brush
	821-011CQT	PAINT LP BEIGE QUART	Beige quart can
	821-070CQT	PAINT GP GLOSS BLACK QUART	Black quart can
	821-054CQT	PAINT MED RED QUART	Red quart can
	821-058CQT	PAINT GREEN QUART	Green quart can
	821-066CQT	PAINT ORANGE QUART	Orange quart can
	821-067CQT	PAINT BLUE QUART	Blue quart can
	821-080CQT	PAINT ALUMINUM/ZINC QUART *	Aluminum/Zinc quart can
	821-011CGL	PAINT LP BEIGE GALLON	Beige gallon can
	821-070CGL	PAINT GP GLOSS BLACK GALLON	Black gallon can
	821-054CGL	PAINT MED RED GALLON	Red gallon can
	821-058CGL	PAINT GREEN GALLON	Green gallon can
	821-066CGL	PAINT ORANGE GALLON	Orange gallon can
	821-067CGL	PAINT BLUE GALLON	Blue gallon can
	821-080CGL	PAINT ALUMINUM/ZINC GALLON	Aluminum/Zinc gallon can

Blade Bundle Kit

Applies to Models: ACCU-Z ZT372, ACCU-Z ZT360

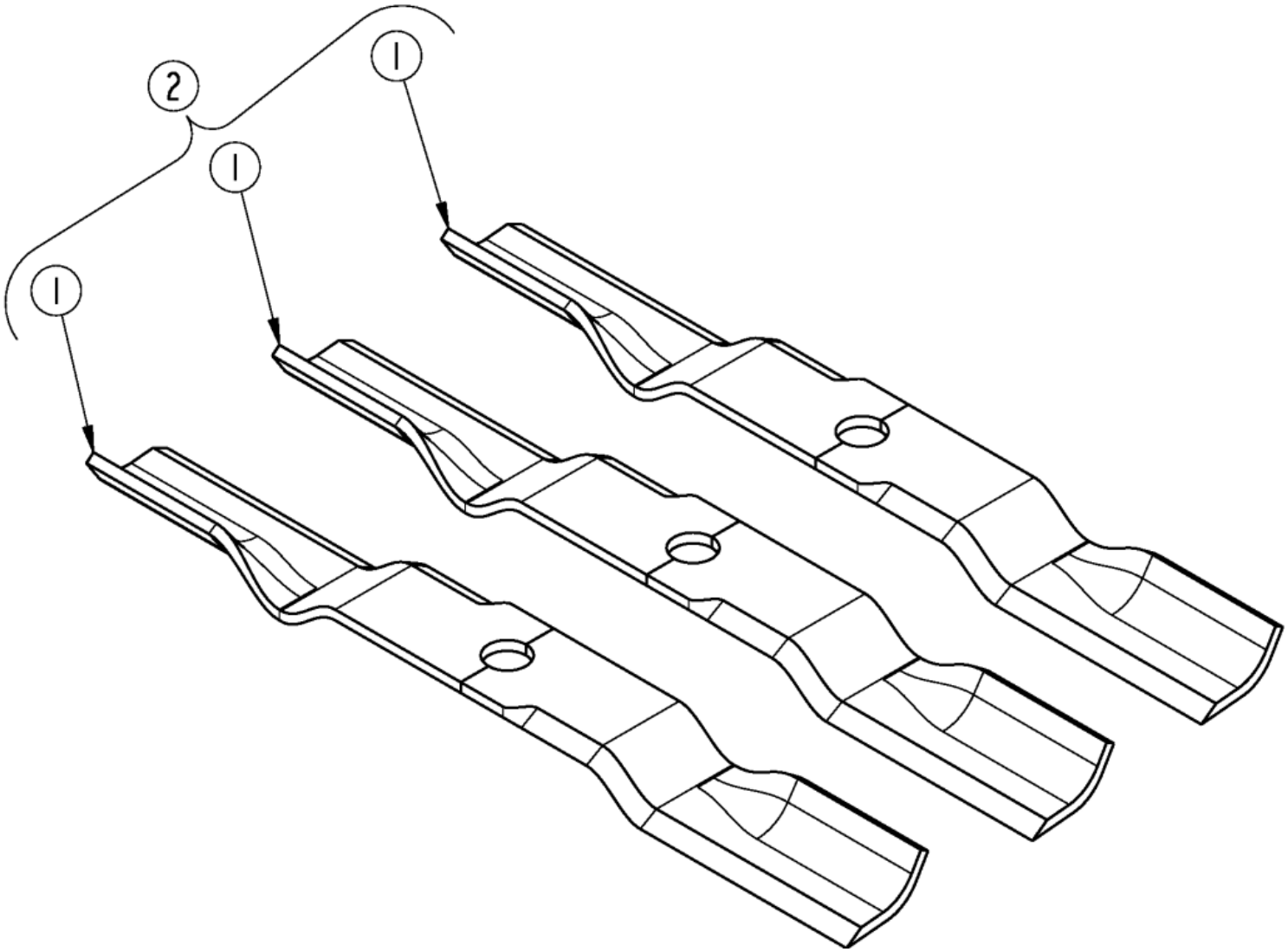

Blade Bundle Kit

Applies to Models: ACCU-Z ZT372, ACCU-Z ZT360

Ref.	Part No.	Part Description	Comments
	DWG 39786	Drawing Image Number	
1	891-428C	MWR BLD 1/4X20.91 HL CW	
2	357-677A	20.91" MWR BLD KIT, HL CW	

Lift Jack Front Mount

Applies to Models: ACCU-Z ZT372, ACCU-Z ZT360

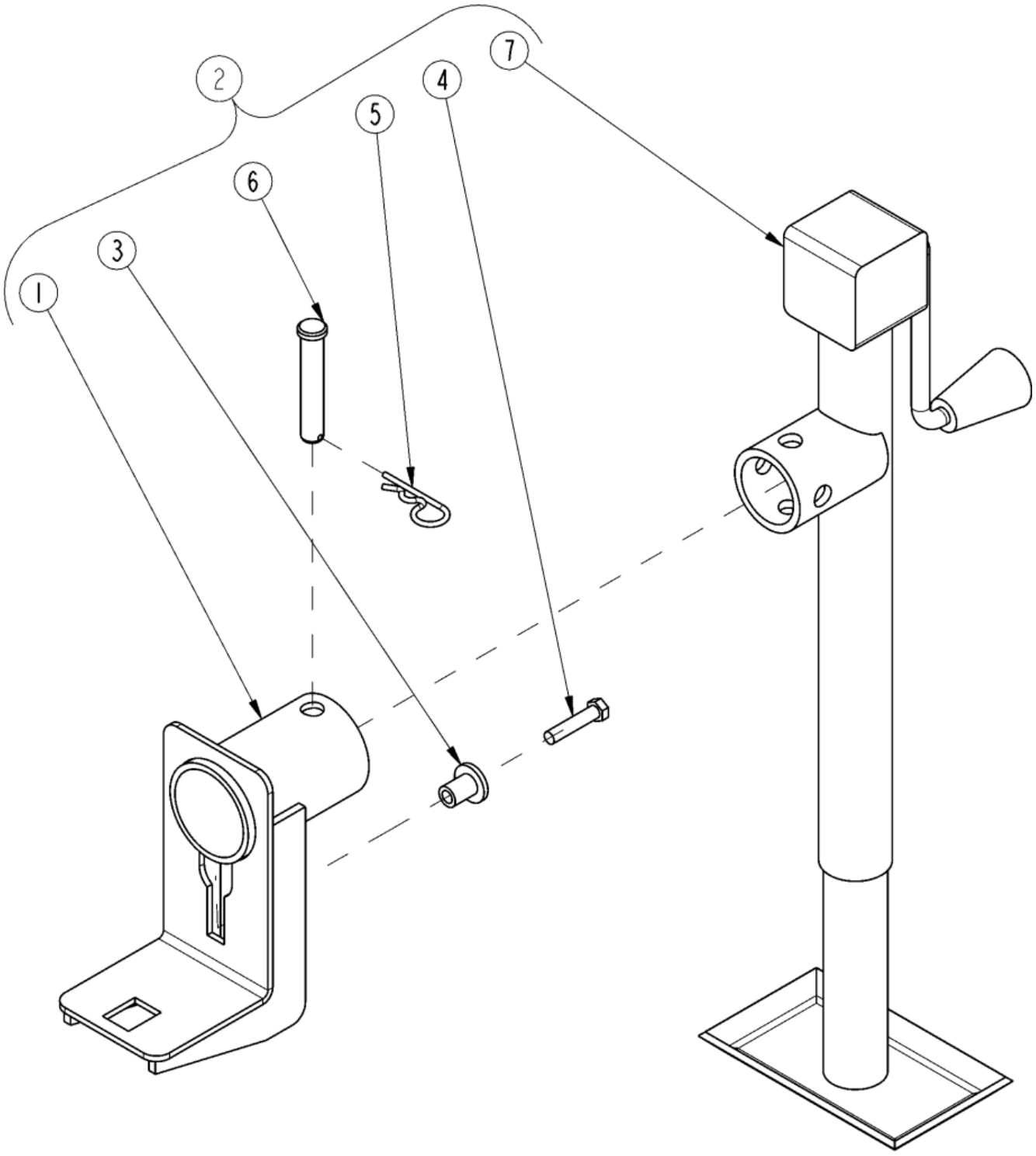

Lift Jack Front Mount

Applies to Models: ACCU-Z ZT372, ACCU-Z ZT360

Ref.	Part No.	Part Description	Comments
	DWG30195	Drawing Image Number	
1	357-208H	LIFT BRACKET	
2	357-209A	MOWER JACK, ACCU Z	
3	357-503D	JACK RETAINER	
4	802-297C	HHCS 3/8-16X1 3/4 GR8	
5	805-032C	PIN HAIR COTTER .148 WIRE	
6	805-334C	PIN CLVS .63X3.27 USBL	
7	890-245C	SCREW JACK 2000# 15-30 TOP WND	

Light Kit

Applies to Models: ACCU-Z ZT372, ACCU-Z ZT360

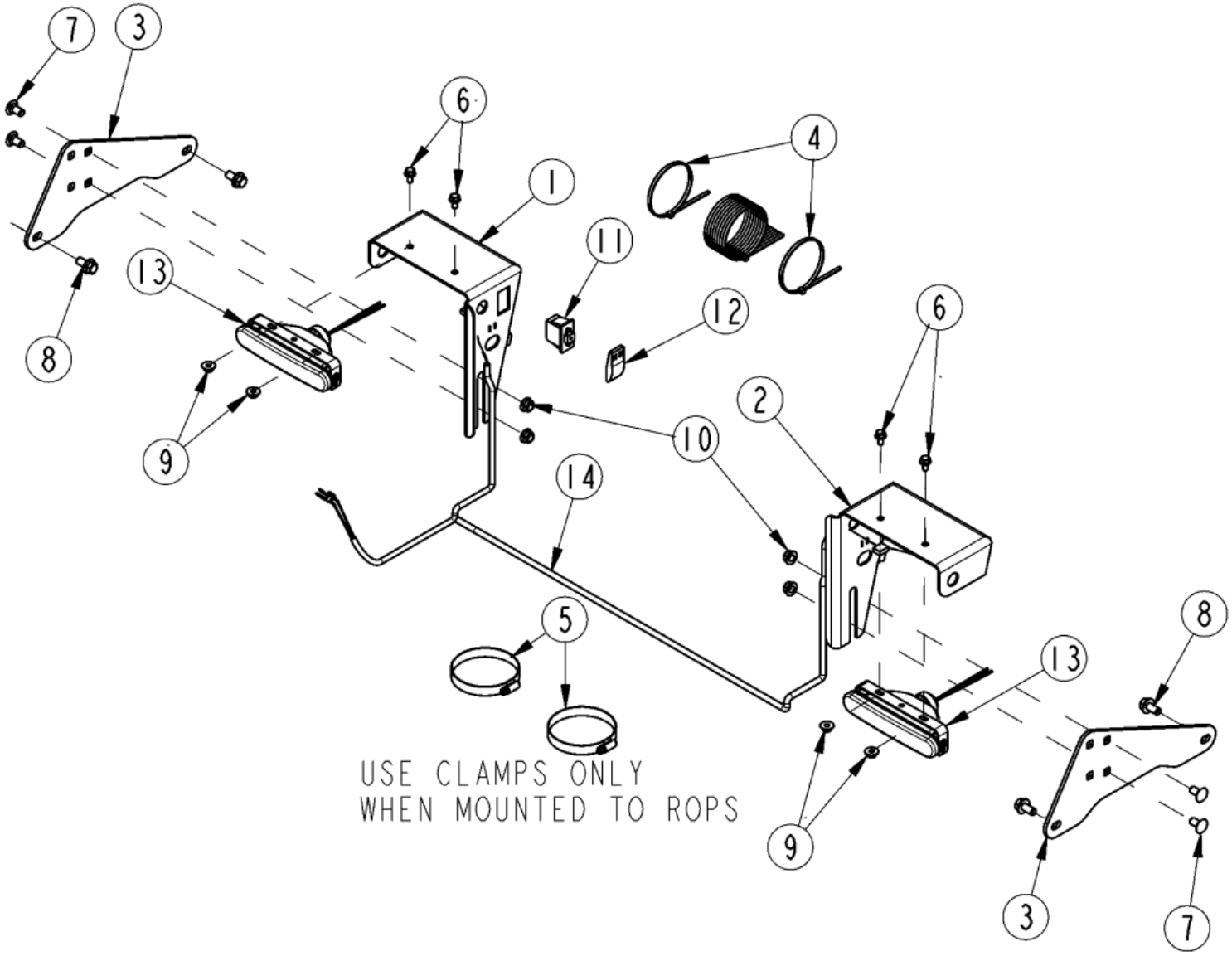

Light Kit

Applies to Models: ACCU-Z ZT372, ACCU-Z ZT360

Ref.	Part No.	Part Description	Comments
	DWG35491	Drawing Image Number	
	357-160A	LIGHT KIT, Z-MOWER	
		*	
1	357-450D	LIGHT BRCKT RH, Z MOWER	
2	357-461D	LIGHT BRCKT LH, Z MOWER	
3	357-634D	ADAPTER PLATE LIGHT KIT	
4	800-060C	CABLE TIE .19X14.25 3DIA 50LB	
5	800-241C	CLAMP WRM DRV #48SS (2.5-3.5)	
6	802-148C	HFSS 1/4-20X1/2 GR5	
7	802-149C	RHSNB 3/8-16X3/4 GR5	
8	802-185C	HFSS 3/8-16X3/4 GR5	
9	803-088C	NUT HEX LOCK 1/4-20 FLG	
10	803-209C	NUT FLANGE LOCK 3/8-16 PLT	
11	833-269C	SWITCH ROCKER SPST	
12	833-271C	SWITCH ACTUATOR	
13	833-275C	HEADLIGHT	
14	833-444C	WIRE HARNESS,LIGHT KIT Z-MOWER	

Rear Saftey Light & Sign Kit

Applies to Models: ACCU-Z ZT372, ACCU-Z ZT360

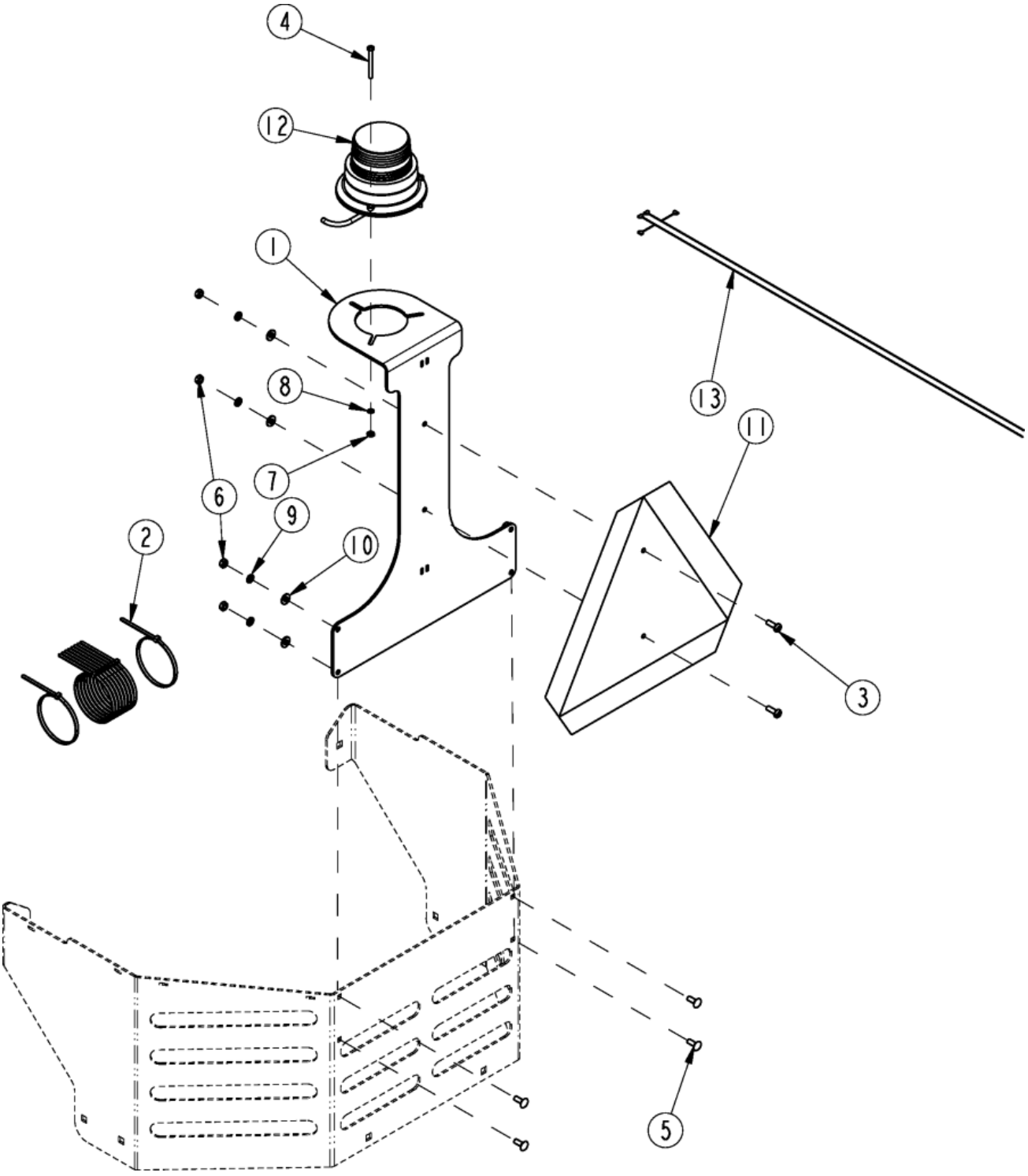

Rear Saftey Light & Sign Kit

Applies to Models: ACCU-Z ZT372, ACCU-Z ZT360

Ref.	Part No.	Part Description	Comments
	DWG 35588	Drawing Image Number	
	357-639A	ZT3 SAFETY LIGHT AND SIGN KIT	Mowers with S/N 805600- will require drilling mounting holes or purchase revised bumper 358-366D.
		*	
1	358-398D	ZT BEACON AND SMV MNT	
2	800-060C	CABLE TIE .19X14.25 3DIA 50LB	
3	801-005C	SCREW PAN HD 1/4-20 X 3/4	
4	801-196C	PHMS #10-24X2 SS	
5	802-002C	RHSNB 1/4-20X3/4 GR5	
6	803-006C	NUT HEX 1/4-20 PLT	
7	803-269C	NUT HEX 10-32 PLT	
8	804-004C	WASHER INTERNAL STAR #10 PLT	
9	804-006C	WASHER LOCK SPRING 1/4 PLT	
10	804-007C	WASHER FLAT 1/4 SAE PLT	
11	818-055C	DECAL SLOW MOVING-GALV. BACKED	
12	833-563C	BEACON LIGHT AMBER	
13	833-651C	ZT BEACON WIRE HARNESS	

Part Number Index

Part Number	Page
0-332-209-150	25
11010-7020	31
11010-7028	31
11011-7047	31
11011-7050	31
11054-7013-9X	31
11054-7016-9X	31
11065-7008	31
11065-7009	31
11065-7017	31
11065-7025	31
172-242D	45
203238	35
204184	35
230024700	9
230321672	9
30-449S6B	37, 39
310-466A	45
310-469A	45
310-470A	45
310-473A	45
310-630D	45
356-074D	11
356-113A	11
356-137S	35
357-002H	17
357-009H	19
357-042H	17
357-112D	21
357-160A	55
357-208H	53
357-209A	53
357-234D	41
357-279D	45
357-280D	45
357-282D	43
357-384H	41
357-420A	9
357-450D	55
357-461D	55
357-487D	41
357-501A	35
357-503D	53
357-514H	17
357-518H	29
357-519S	29
357-521H	15
357-522H	15
357-523H	15
357-525H	15
357-529H	19
357-532H	19
357-544H	43
357-545S	43
357-594H	7
357-597H	5
357-599H	5
357-603H	41
357-605H	43
357-607H	43
357-615H	45
357-616H	45
357-618S	45
357-619H	45
357-622S	45
357-628A	45
357-629A	45
357-634D	55
357-639A	57
357-677A	51
357-722D	43
357-781D	19
357-851D	17
357-852D	5
357-855D	25
357-870D	41
358-018D	19
358-022D	19
358-046D	21
358-086D	17
358-194D	17
358-208D	5
358-210D	17
358-211D	29
358-215D	15
358-225D	19
358-226D	19
358-230D	19
358-241D	29
358-253D	43
358-254D	43
358-256D	43
358-272D	43
358-283D	33
358-284D	35
358-285D	35
358-365D	21
358-366D	7
358-367D	7
358-372D	19
358-374D	17
358-375D	5
358-385D	43
358-388D	43
358-390D	41
358-398D	57
5181861	41
53008	27
53018	27
53-164	41
53367	27
53724	27
711941272	9
71906	27
71943	27
71945	27
72039	27
800-001C	41, 45
800-029C	29
800-060C	55, 57
800-080C	19, 43
800-099C	45
800-120C	41
800-121C	17
800-219C	43
800-241C	55
800-303C	23, 25
800-356C	35
800-412C	35
801-005C	57
801-196C	57
801-198C	21
801-205C	33
801-225C	15
801-229C	41
801-237C	17
802-002C	57
802-007C	5
802-014C	17
802-015C	43
802-026C	17
802-042C	9
802-051C	29
802-058C	45
802-079C	33
802-080C	17
802-083C	29
802-092C	19
802-099C	9
802-137C	43
802-148C	55
802-149C	7, 21, 55
802-155C	19

Part Number	Page
802-168C	41
802-179C	19
802-185C	41, 55
802-218C	43
802-227C	9
802-229C	45
802-252C	19
802-257C	21
802-258C	5
802-269C	41
802-282C	29
802-297C	53
802-338C	45
802-387C	41
802-456C	43
802-459C	33
802-567C	29, 45
802-569C	17, 19
802-633C	5, 15, 17, 21, 25, 29
802-674C	19
802-698C	45
802-732C	35
802-745C	43
802-747C	5
802-778C	31
802-794C	43
802-814C	19
802-846C	31
802-884C	45
802-900C	41
802-923C	33
803-001C	15, 33
803-006C	57
803-011C	5, 11, 13
803-012C	19
803-013C	17, 41
803-019C	9
803-020C	41
803-024C	29
803-043C	29
803-052C	19
803-078C	17
803-084C	19, 43
803-086C	19
803-088C	55
803-094C	15
803-114C	45
803-115C	45
803-119C	45
803-147C	43
803-159C	29, 37, 39
803-169C	5, 9, 43
803-177C	5, 17
803-178C	43
803-193C	17
803-194C	5, 15, 17, 21, 25, 29
803-198C	19, 29, 45
803-200C	17
803-209C	5, 7, 17, 19, 21, 43, 55
803-220C	33
803-263C	45
803-269C	57
803-270C	17
803-275C	19
803-293C	21
803-329C	29, 37, 39
803-333C	9
803-380C	41
804-004C	57
804-006C	57
804-007C	57
804-012C	17, 33, 41
804-013C	33
804-014C	33, 45
804-015C	41
804-016C	5, 43
804-021C	15, 29
804-022C	29, 45
804-036C	5, 11, 13, 15, 17, 19
804-041C	9
804-046C	33
804-054C	15, 33
804-093C	45
804-110C	45
804-136C	41
804-154C	43
804-231C	33
805-032C	53
805-063C	15
805-066C	15
805-334C	53
805-400C	15
805-438C	19
805-494C	41
807-068C	45
807-096C	5
807-216C	5
807-242C	29
807-280C	17
807-288C	5
807-293C	41
807-296C	41
807-303C	15
807-308C	19
807-309C	15
807-320C	15
808-107C	45
808-384C	29
808-414C	45
808-457C	33
808-458C	45
808-459C	45
808-482C	29
814-304C	41
814-305C	37, 39
814-310C	37, 39
814-311C	37, 39
814-323C	41
814-484C	37, 39
814-485C	37, 39
816-298C	43
816-461C	17
816-491C	7
816-537C	43
816-645C	41
816-649C	41
816-712C	43
816-780C	29
816-781C	45
816-782C	45
817-028C	15, 17, 29, 45
817-246C	15, 19
817-560C	5, 15
817-581C	43
817-618C	17
817-684C	41
817-755C	17
817-843C	41
817-844C	41
817-845C	41
817-911C	29
817-912C	29
817-995C	35
817-996C	35
818-055C	57

Part Number	Page
818-543C	47
821-011C	49
821-011CGL	49
821-011CQT	49
821-011CTU	49
821-054C	49
821-054CGL	49
821-054CQT	49
821-054CTU	49
821-058C	49
821-058CGL	49
821-058CQT	49
821-058CTU	49
821-066C	49
821-066CGL	49
821-066CQT	49
821-066CTU	49
821-067C	49
821-067CGL	49
821-067CQT	49
821-067CTU	49
821-070C	49
821-070CGL	49
821-070CQT	49
821-070CTU	49
821-080C	49
821-080CGL	49
821-080CQT	49
821-080CTU	49
822-006C	45
822-161C	45
822-222C	41
822-223C	41
822-247C	41
823-424C	9
826-616C	33
826-619C	33
829-128C	33
829-129C	35
830-009C	35
831-031C	35
831-034C	33
831-089C	27, 29
831-090C	27, 29
833-269C	55
833-271C	55
833-275C	55
833-336C	21, 25
833-341C	15, 25
833-342C	21
833-350C	21, 25
833-351C	21, 25
833-352C	21, 25
833-384C	11
833-444C	55
833-445C	13
833-465C	23
833-503C	17, 25
833-506C	23
833-558C	25
833-563C	57
833-629C	21
833-630C	21
833-651C	57
838-303C	47
838-306C	47
838-307C	47
838-308C	47
838-310C	47
838-328C	47
838-444C	47
838-764C	47
838-785C	47
838-811C	47
838-812C	47
838-814C	47
838-815C	47
838-829C	47
839-002C	13
839-049C	33
839-145C	13
839-148C	13
839-149C	13
839-287C	25
839-288C	25
839-320C	11
839-385C	11
839-411C	11
839-416C	11
839-417C	13
839-418C	13
839-970C	11
839-971C	11
839-973C	31
839-974C	31
840-262C	5, 47
840-272C	9
840-333C	19, 47
840-335C	47
842-016C	9
848-028C	47
848-159C	47
848-161C	47
848-268C	47
848-799C	47
858-040C	47
858-041C	47
858-077C	47
858-337C	47
858-677C	47
858-874C	47
890-070C	17
890-106C	33
890-115C	33
890-200C	45
890-204C	45
890-245C	53
890-698C	45
890-702C	45
890-907C	19
890-952C	45
891-253C	15
891-384C	17
891-404C	33
891-428C	45, 51
92171-7007	31
92171-7023	31
92192-7087	31
92192-7189	31
990-225R	35
AO-6890	35
DWG 12345	43
DWG 25858	31
DWG 33795	39
DWG 35353	7
DWG 35364	29
DWG 35365	35
DWG 35366	37, 41
DWG 35370	47
DWG 35422	33
DWG 35588	57
DWG 39786	51
DWG 76585	49
DWG27824	23
DWG30195	53
DWG33786	13
DWG33792	27
DWG33800	25
DWG35352	5
DWG35354	9
DWG35355	11
DWG35361	15
DWG35362	17

Part Number	Page
DWG35363	21
DWG35368	45
DWG35369	19
DWG35491	55
GAR-1330	35
TR-412	41

Great Plains Manufacturing, Inc.
Corporate Office: P.O. Box 5060
Salina, Kansas 67402-5060 USA

www.landpride.com