Table of Contents

Flail Mowers

FM2548, FM2560, FM2572, & FM2584

70037

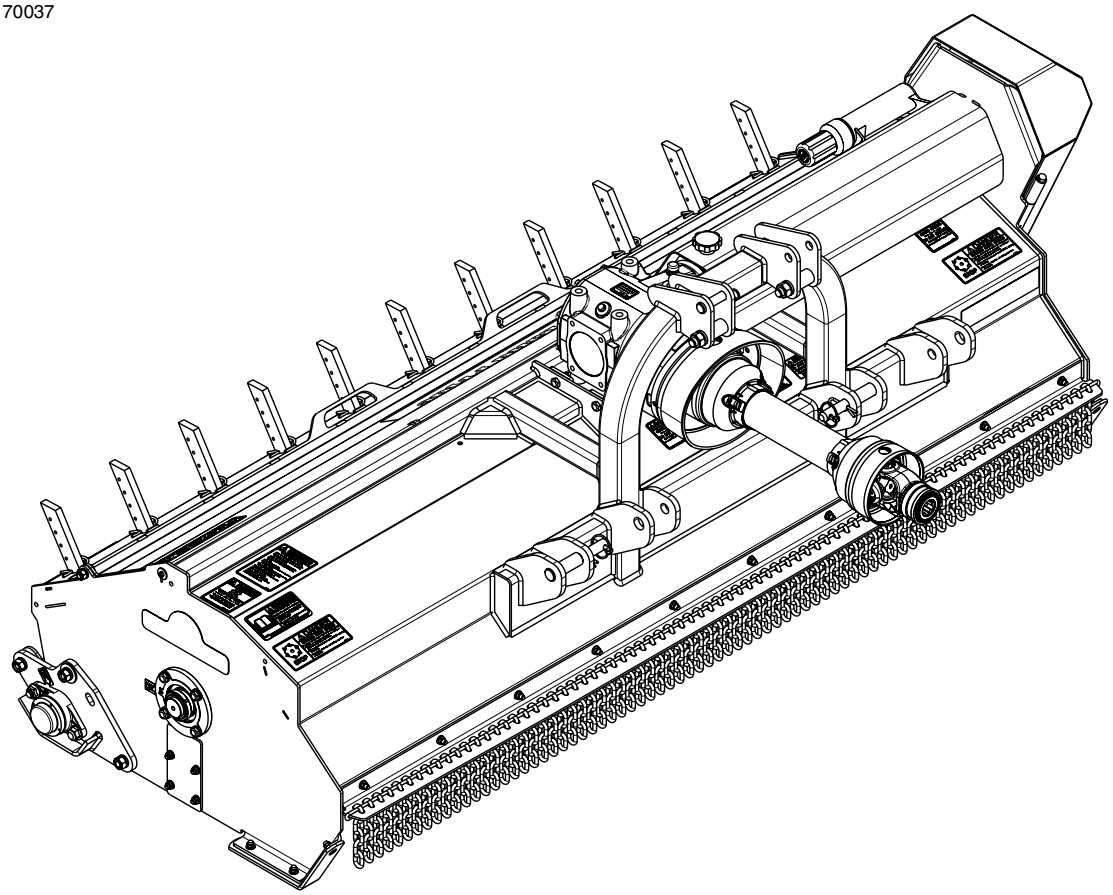

333-138M
Operator's Manual

Read the Operator's Manual entirely. When you see this symbol, the subsequent instructions and warnings are serious - follow without exception. Your life and the lives of others depend on it!

Cover photo may show optional equipment not supplied with standard unit.

For an Operator's Manual and Decal Kit in French or Spanish Language, please see your Land Pride dealer.

Printed 5/30/23

Machine Identification

Record your machine details in the log below. If you replace this manual, be sure to transfer this information to the new manual.

If you, or the dealer, have added Options not originally ordered with the machine, or removed Options that were originally ordered, the weights and measurements are no longer accurate for your machine. Update the record by adding the machine weight and measurements provided in the Specifications & Capacities Section of this manual with the Option(s) weight and measurements.

Model Number	
Serial Number	
Machine Height	
Machine Length	
Machine Width	
Machine Weight	
Delivery Date	
First Operation	
Accessories	_____ _____ _____

Dealer Contact Information

Name: _____

Street: _____

City/State: _____

Telephone: _____

Email: _____

California Proposition 65

WARNING: Cancer and reproductive harm - www.P65Warnings.ca.gov

Continue Table of Contents on next page

See previous page for Table of Contents.

Parts Manual QR Locator

The QR (Quick Reference) code on the the left will take you to the Parts Manual for this equipment. Download the appropriate App on your smart phone, open the App, point your phone on the QR code and take a picture.

Dealer QR Locator

The QR code on the left will link you to available dealers for Land Pride products. Refer to Parts Manual QR Locator on this page for detailed instructions.

Listed below are common practices that may or may not be applicable to the products described in this manual.

Safety at All Times

Careful operation is your best assurance against an accident.

All operators, no matter how much experience they may have, should carefully read this manual and other related manuals before operating the power machine and this implement.

- ▲ Thoroughly read and understand the "Safety Label" section. Read all instructions noted on them.
- ▲ Do not operate the equipment while under the influence of drugs or alcohol, as they impair your ability to safely and properly operate the equipment.
- ▲ The operator should be familiar with all functions of the tractor and attached implement, and be able to handle emergencies quickly.
- ▲ Make sure all guards and shields appropriate for the operation are in place and secured before operating the implement.
- ▲ Keep all bystanders away from equipment and work area.
- ▲ Start tractor from the driver's seat with hydraulic controls in neutral.
- ▲ Operate tractor and controls from the driver's seat only.
- ▲ Never dismount from a moving tractor or leave tractor unattended with engine running.
- ▲ Do not allow anyone to stand between the implement and tractor while backing up to the implement.
- ▲ Keep hands, feet, and clothing away from power-driven parts.
- ▲ While transporting and operating equipment, watch out for objects overhead and along the sides such as fences, trees, buildings, wires, etc.
- ▲ Do not turn tractor so tight as to cause hitched implement to ride up on the tractor's rear wheel.
- ▲ Store implement in a safe and secure area where children normally do not play. When needed, secure implement against falling with support blocks.

Look for the Safety Alert Symbol

The SAFETY ALERT SYMBOL indicates there is a potential hazard to personal safety and extra precaution must be taken. When you see this symbol, be alert and carefully read the message that follows it. Hazard control, and accident prevention are dependent upon the awareness, concern, prudence, and proper training of personnel involved in the operation, transport, maintenance, and storage of equipment.

Be Aware of Signal Words

A signal word designates a degree or level of hazard seriousness. They are:

DANGER: Indicates a hazardous situation that, if not avoided, will result in death or serious injury.

WARNING: Indicates a hazardous situation that, if not avoided, could result in death or serious injury.

CAUTION: Indicates a hazardous situation that, if not avoided, may result in minor or moderate injury.

Be Aware of Special Notices

Special notices are intended to point out important and helpful information that should be followed. They are usually placed inside a box. They are:

IMPORTANT: Indicates that equipment or property damage could result if instructions are not followed.

NOTE: Indicates supplementary explanations that will be helpful when using the equipment.

Safety Precautions for Children

Tragedy can occur if the operator is not alert to the presence of children, Children generally are attracted to implements and their work.

- ▲ Never assume children will remain where you last saw them.
- ▲ Keep children out of the work area and under the watchful eye of a responsible adult.
- ▲ Be alert and shut the implement and tractor down if children enter the work area.
- ▲ Never carry children on the tractor or implement. There is not a safe place for them to ride. They may fall off and be run over or interfere with the control of the power machine.
- ▲ Never allow children to operate the power machine, even under adult supervision.
- ▲ Never allow children to play on the power machine or implement.
- ▲ Use extra caution when backing up. Before the tractor starts to move, look down and behind to make sure the area is clear.

Tractor Shutdown & Storage

- ▲ If engaged, disengage power take-off.
- ▲ Park on solid, level ground and lower implement to ground or onto support blocks.
- ▲ Put tractor in park or set park brake.
- ▲ Turn off engine and remove ignition key to prevent unauthorized starting.
- ▲ Relieve all hydraulic pressure to auxiliary hydraulic lines.
- ▲ Wait for all components to stop before leaving operator's seat.
- ▲ Use steps, grab-handles and anti-slip surfaces when stepping on and off the tractor.

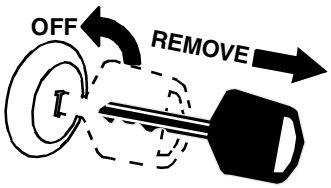

Listed below are common practices that may or may not be applicable to the products described in this manual.

Use A Safety Chain

- ▲ A safety chain will help control drawn machinery should it separate from the tractor drawbar.
- ▲ Use a chain with the strength rating equal to or greater than the gross weight of the towed implement.
- ▲ Attach the chain to the tractor drawbar support or other specified anchor location. Allow only enough slack in the chain to permit turning.
- ▲ Always hitch the implement to the machine towing it. Do not use the safety chain to tow the implement.

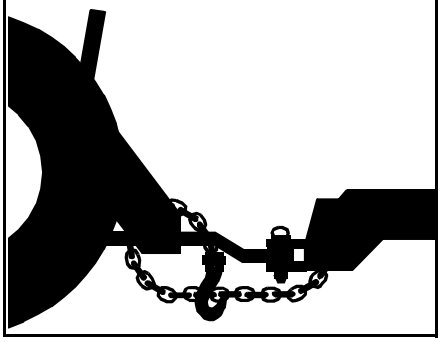

Towing Safely

- ▲ Comply with federal, state, and local laws.
- ▲ Use towing vehicle and trailer of adequate size and capacity. Secure equipment towed on a trailer with chocks, tie downs, and chains.
- ▲ **IMPORTANT:** Do not tow a load that is more than double the weight of the vehicle towing the load.
- ▲ Sudden braking can cause a towed trailer to swerve unexpectedly. Reduce speed if trailer is not equipped with brakes.

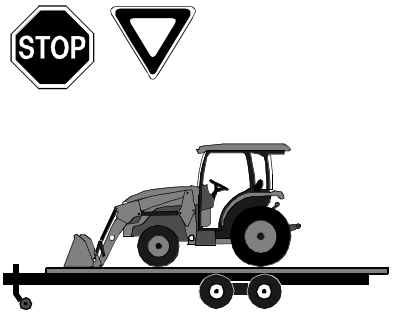

Transport Safely

- ▲ Comply with federal, state, and local laws.
- ▲ Avoid contact with any overhead utility lines or electrically charged conductors.
- ▲ Engage park brake when stopped on an incline.
- ▲ Maximum transport speed for an implement is 20 mph (32 km/h). DO NOT EXCEED.
- ▲ Never travel at a speed which does not allow adequate control of steering and stopping. Some rough terrains require a slower speed. Sudden braking can cause a towed load to swerve and upset.
- ▲ Do not tow an implement that, when fully loaded, weights more than 1.5 times the weigh of towing vehicle.

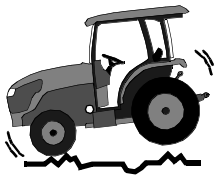

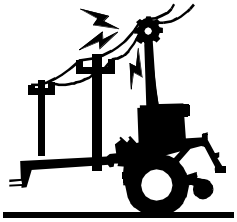

Tire Safety

- ▲ Tire changing can be dangerous and must be performed by trained personnel using the correct tools and equipment.
- ▲ Always properly match the wheel size to the properly sized tire.
- ▲ Always maintain correct tire pressure. Do not inflate tires above recommended pressures shown in the Operator's Manual.
- ▲ When inflating tires, use a clip-on chuck and extension hose long enough to allow you to stand to one side and NOT in front of or over the tire assembly. Use a safety cage if available.
- ▲ Securely support the implement when changing a wheel.
- ▲ When removing and installing wheels, use wheel handling equipment adequate for the weight involved.
- ▲ Make sure wheel bolts have been tightened to the specified torque.

Practice Safe Maintenance

- ▲ Understand procedure before doing work. Refer to the Operator's Manual for additional information.
- ▲ Work on a level surface in a clean dry area that is well-lit.
- ▲ Lower implement to the ground and follow all shutdown procedures before leaving the operator's seat to perform maintenance.
- ▲ Do not work under any hydraulically supported equipment. It can settle, suddenly leak down, or be lowered accidentally. If it is necessary to work under the equipment, securely support it with stands or suitable blocking beforehand.
- ▲ Use properly grounded electrical outlets and tools.
- ▲ Use correct tools and equipment for the job that are in good condition.
- ▲ Allow equipment to cool before working on it.
- ▲ Disconnect battery ground cable (-) before servicing or adjusting electrical systems or before welding on implement.
- ▲ Inspect all parts. Make certain parts are in good condition & installed properly.
- ▲ Replace parts on this implement with genuine Land Pride parts only. Do not alter this implement in a way which will adversely affect its performance.
- ▲ Do not grease or oil implement while it is in operation.
- ▲ Remove buildup of grease, oil, or debris.
- ▲ Always make sure any material and waste products from the repair and maintenance of the implement are properly collected and disposed.
- ▲ Remove all tools and unused parts from equipment before operation.
- ▲ Do not weld or torch on galvanized metal as it will release toxic fumes.

Listed below are common practices that may or may not be applicable to the products described in this manual.

Prepare for Emergencies

- ▲ Be prepared if a fire starts.
- ▲ Keep a first aid kit and fire extinguisher handy.
- ▲ Keep emergency numbers for doctor, ambulance, hospital, and fire department near the phone.

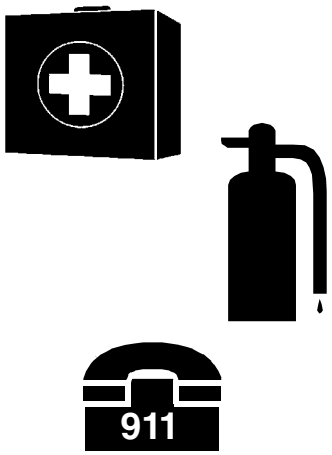

Wear Personal Protective Equipment (PPE)

- ▲ Wear protective clothing and equipment appropriate for the job such as safety shoes, safety, glasses, hard hat, dust mask, and ear plugs.
- ▲ Clothing should fit snug without fringes and pull strings to avoid entanglement with moving parts.
- ▲ Prolonged exposure to loud noise can cause hearing impairment or hearing loss. Wear suitable hearing protection such as earmuffs or earplugs.
- ▲ Operating a machine safely requires the operator's full attention. Avoid wearing headphones while operating equipment.

Avoid High Pressure Fluids

- ▲ Escaping fluid under pressure will penetrate the skin or eyes causing serious injury.
- ▲ Relieve all residual pressure before disconnecting hydraulic lines or performing work on the hydraulic system.
- ▲ Make sure all hydraulic fluid connections are properly tightened/torqued and all hydraulic hoses and lines are in good condition before applying pressure to the system.
- ▲ Use a piece of paper or cardboard, NOT BODY PARTS, to check for suspected leaks.
- ▲ Wear protective gloves and safety glasses or goggles when working with hydraulic systems.
- ▲ **DO NOT DELAY.** If an accident occurs, seek immediate emergency medical care or gangrene may result.

Use Safety Lights and Devices

- ▲ A slow moving power machine can create a hazard when driven on public roads. They are difficult to see, especially at night.
- ▲ Flashing warning lights and turn signals are recommended whenever driving on public roads.
- ▲ For tractors and other agriculture equipment, a Slow Moving Vehicle (SMV) sign is required when traveling on public roads.

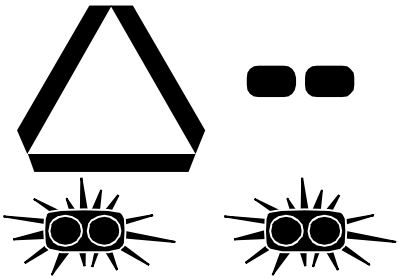

Use Seat Belt and ROPS

- ▲ Land Pride recommends the use of a CAB or roll-over-protective-structures (ROPS) and seat belt in almost all power machines. Combination of a CAB or ROPS and seat belt will reduce the risk of serious injury or death if the power machine should be upset.
- ▲ If ROPS is in the locked-up position, fasten seat belt snugly and securely to help protect against serious injury or death from falling and machine overturn.

Keep Riders Off Machinery

- ▲ Never carry riders on the tractor or implement.
- ▲ Riders obstruct operator's view and interfere with the control of the power machine.
- ▲ Riders can be struck by objects or thrown from the equipment.
- ▲ Never use the tractor or implement to lift or transport riders.

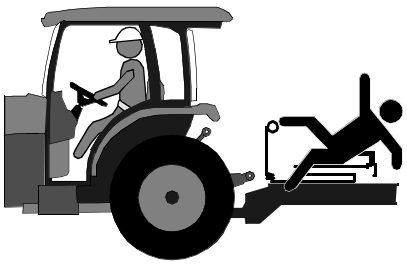

Listed below are common practices that may or may not be applicable to the products described in this manual.

Avoid Crystalline Silica (Quartz) Dust

Because crystalline silica is a basic component of sand and granite, many activities at construction sites produce dust containing crystalline silica. Trenching, sawing, and boring of material containing crystalline silica can produce dust containing crystalline silica particles. This dust can cause serious injury to the lungs (silicosis).

There are guidelines which should be followed if crystalline silica (quartz) is present in the dust.

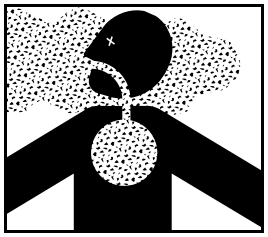

- ▲ Be aware of and follow OSHA (or other local, State, or Federal) guidelines for exposure to airborne crystalline silica.
- ▲ Know the work operations where exposure to crystalline silica may occur.
- ▲ Participate in air monitoring or training programs offered by the employer.
- ▲ Be aware of and use optional equipment controls such as water sprays, local exhaust ventilation, and enclosed cabs with positive pressure air conditioning if the machine has such equipment. Otherwise respirators shall be worn.
- ▲ Where respirators are required, wear a respirator approved for protection against crystalline silica containing dust. Do not alter respirator in any way. Workers who use tight-fitting respirators can not have beards/ mustaches which interfere with the respirator seal to the face.
- ▲ If possible, change into disposable or washable work clothes at the work site; shower and change into clean clothing before leaving the work site.
- ▲ Do not eat, drink, use tobacco products, or apply cosmetics in areas where there is dust containing crystalline silica.
- ▲ Store food, drink, and personal belongings away from the work area.
- ▲ Wash hands and face before eating, drinking, smoking, or applying cosmetics after leaving the exposure area.

Handle Chemicals Properly

- ▲ Protective clothing should be worn.
- ▲ Handle all chemicals with care.
- ▲ Follow instructions on container label.
- ▲ Agricultural chemicals can be dangerous. Improper use can seriously injure persons, animals, plants, soil, and property.
- ▲ Inhaling smoke from any type of chemical fire can be a serious health hazard.
- ▲ Store or dispose of unused chemicals as specified by the chemical manufacturer.

Dig Safe - Avoid Underground Utilities

- ▲ **USA: Call 811**
  CAN: digsafecanada.ca
  Always contact your local utility companies (electrical, telephone, gas, water, sewer, and others) before digging so that they may mark the location of any underground services in the area.
- ▲ Be sure to ask how close you can work to the marks they positioned.

This page left blank intentionally.

Safety Labels

Your Flail Mower comes equipped with all safety labels in place. They were designed to help you safely operate your implement. Read and follow their directions.

1. *Keep all safety labels clean and legible.*
2. *Refer to this section for proper label placement. Replace all damaged or missing labels. Order new labels from your nearest Land Pride dealer. To find your nearest dealer, visit our dealer locator at www.landpride.com.*
3. *Some new equipment installed during repair requires safety labels to be affixed to the replaced component as specified by Land Pride. When ordering new components make sure the correct safety labels are included in the request.*
4. *Refer to this section for proper label placement.*
   To install new labels:
   a. *Clean surface area where label is to be placed.*
   b. *Spray soapy water onto the cleaned area.*
   c. *Peel backing from label and press label firmly onto the surface.*
   d. *Squeeze out air bubbles with edge of a credit card or with a similar type of straight edge.*

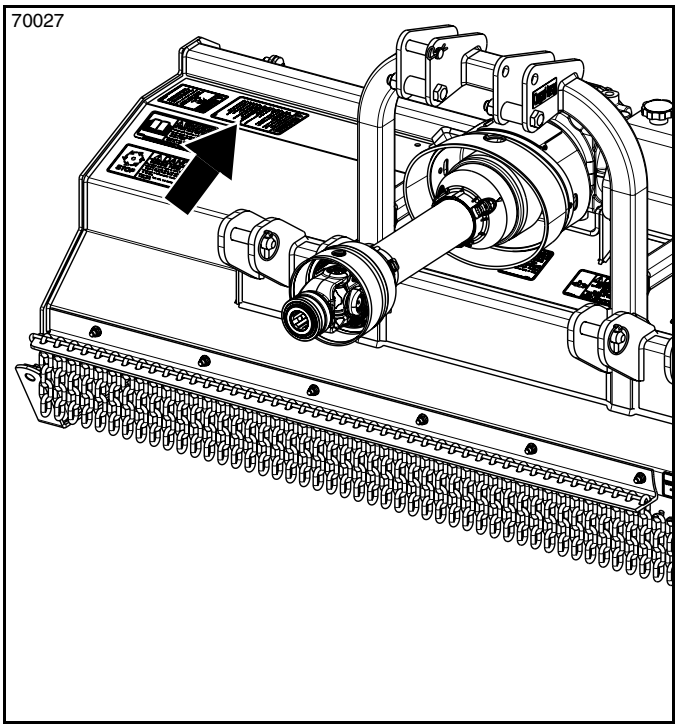

70269

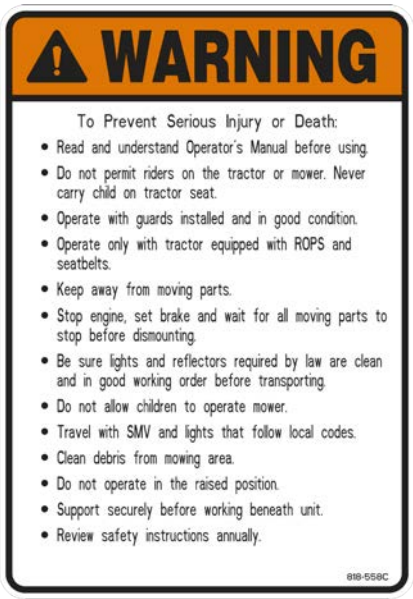

818-558C
Warning: General Mower Hazard
1 Place

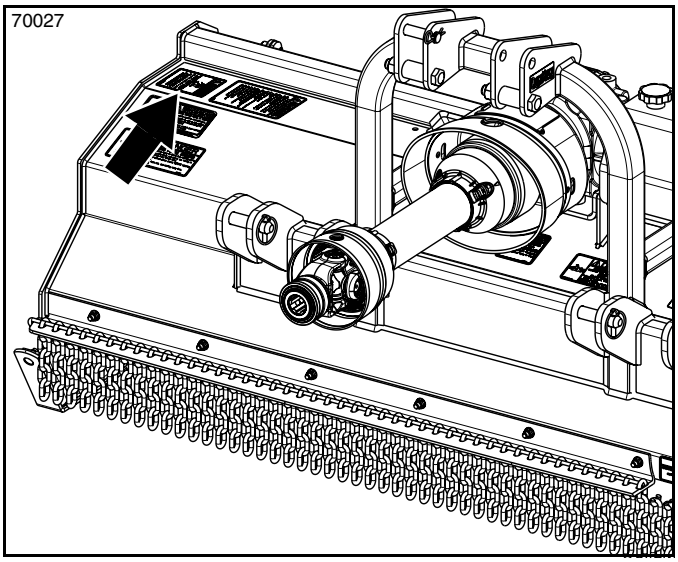

70376

818-556C
Danger: Thrown Object Hazard
1 Place

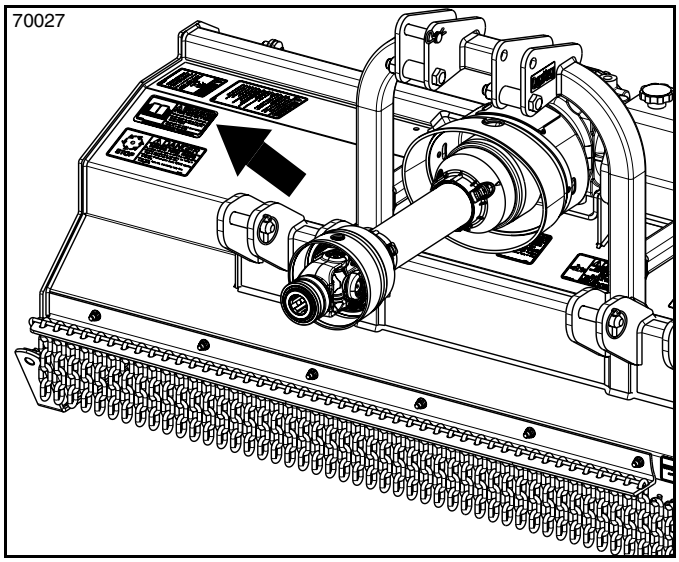

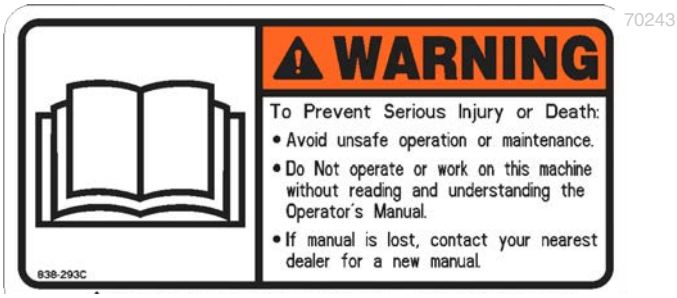

838-293C
Warning: Read Operator's Manual - General Warning
1 Place

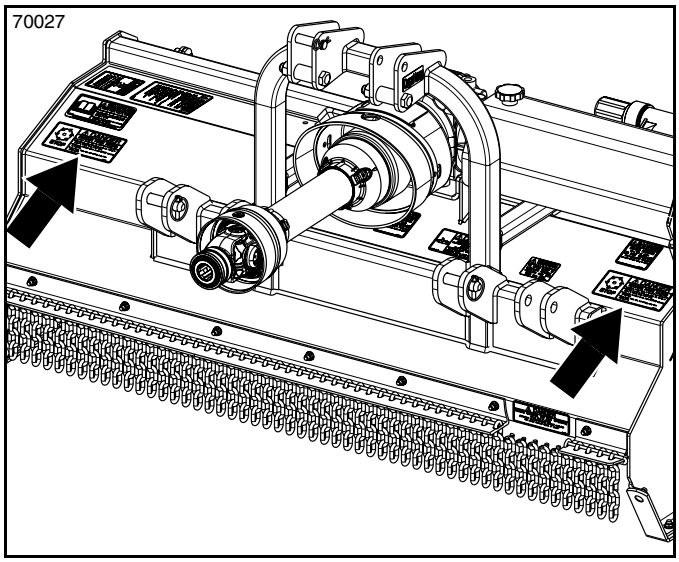

838-079C
Danger: Rotating Knives Hazard
2 Places

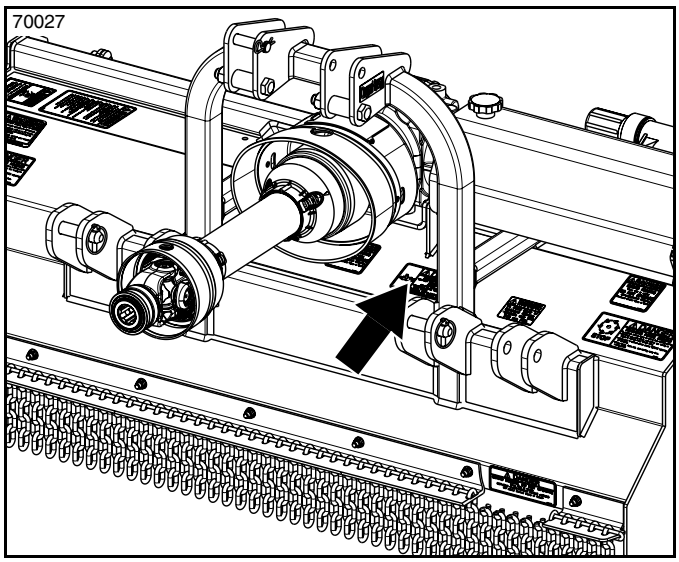

818-142C
Danger: Rotating Driveline Entanglement Hazard
1 Place

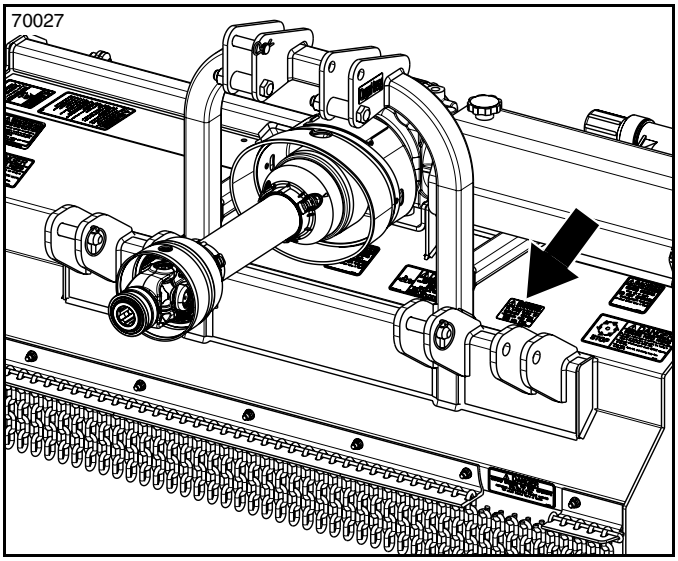

70382

818-130C
Warning: Operate with 540 rpm Power Take-off Speed
1 Place

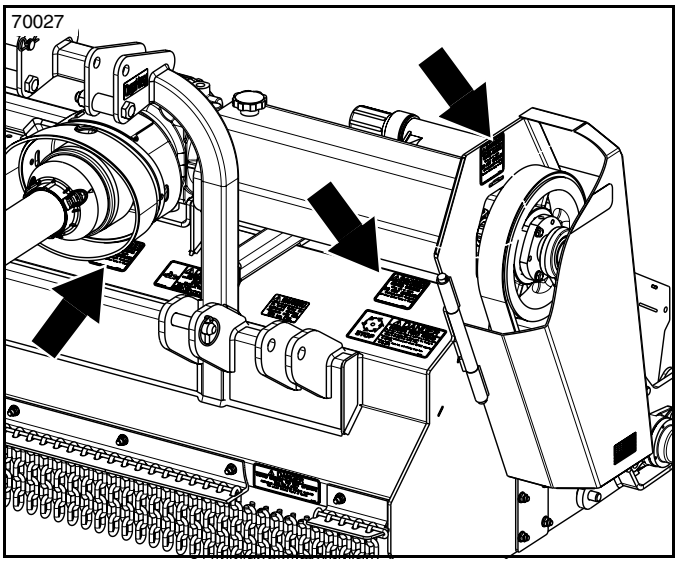

70358

818-543C
Danger: Guard Missing Hazard - Do not Operate
3 Places

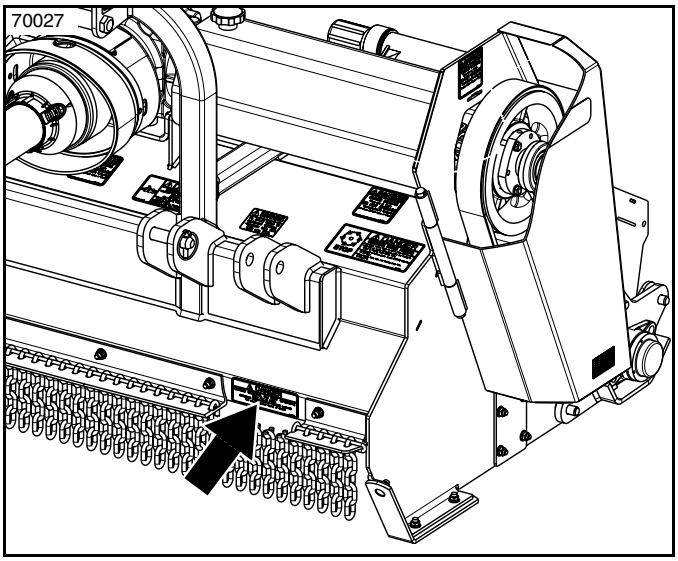

7025

848-088C
Danger: Guard Missing Hazard, Do Not Operate
1 Place

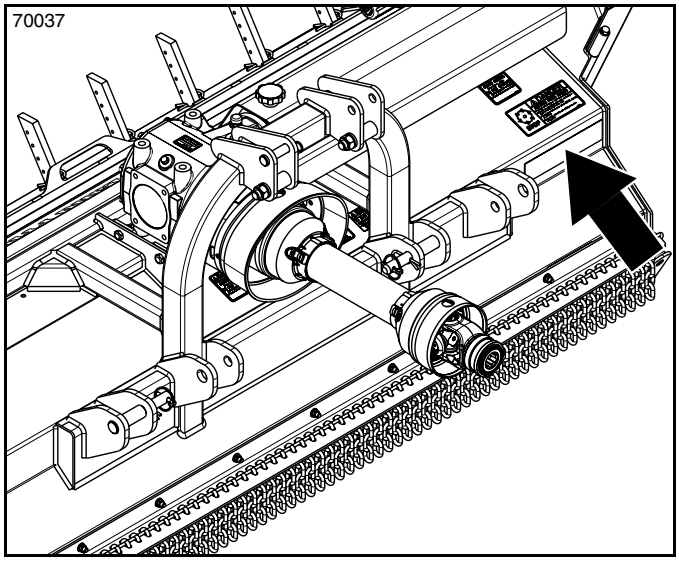

73138

838-615C
Amber Reflector: 2" x 9"
1 Place

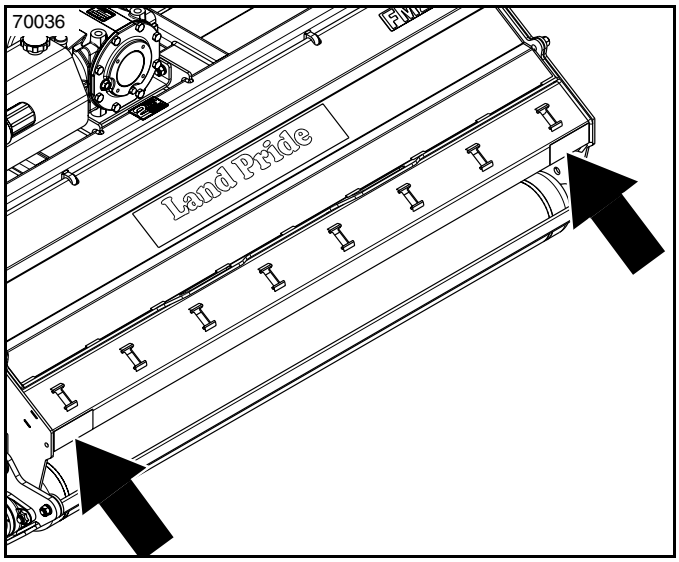

70486

858-095C (FM2548 & FM2560 only)
Red Reflector: 2" x 4 1/2"
2 Places

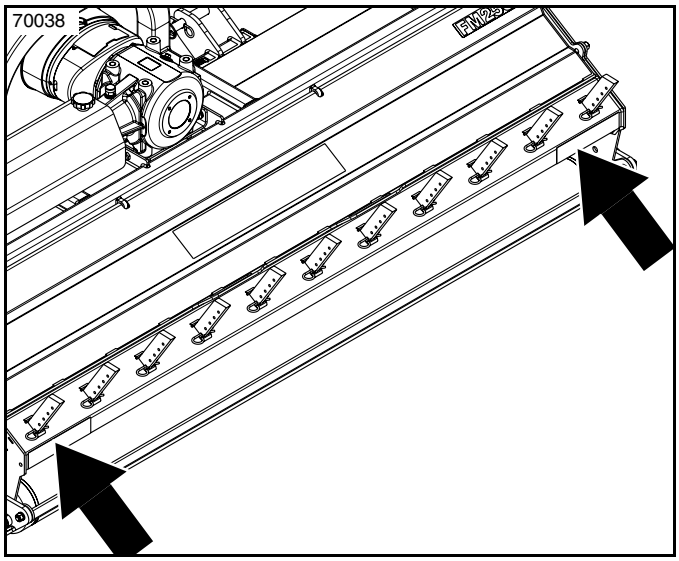

838-614C (FM2572 & FM2584 only)
Red Reflector: 2" x 9"
2 Places

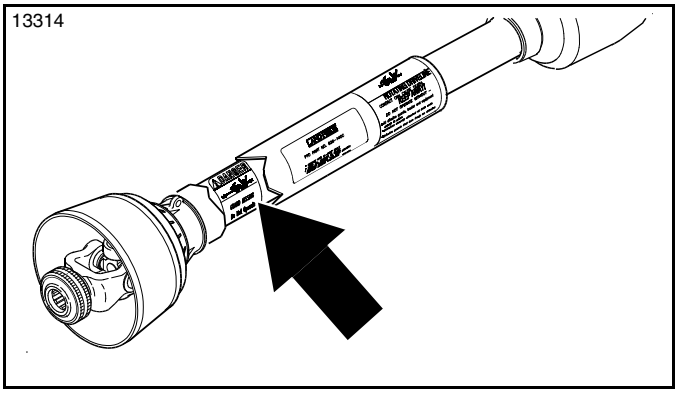

70374

818-540C
Danger: Guard Missing - DO NOT Operate
1 Place: On the driveline's inner profile

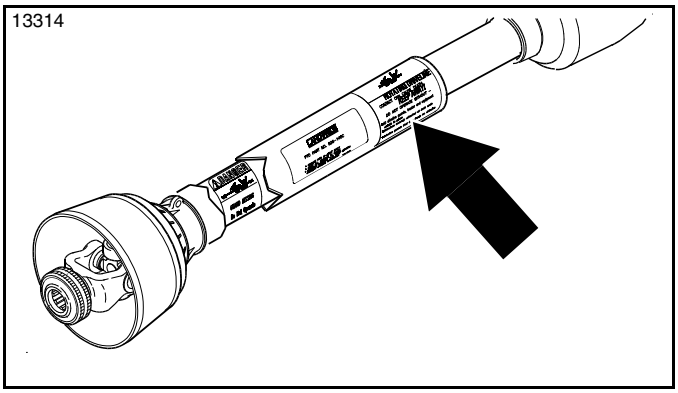

70375

818-552C
Danger: Rotating Driveline - Keep Away
1 Place: On the driveline's outer profile

This page left blank intentionally.

Land Pride welcomes you to the growing family of new product owners. This Flail Mower has been designed with care and built by skilled workers using quality materials. Proper assembly, maintenance, and safe operating practices will help you get years of satisfactory use from this implement.

Application

The heavy-duty FM25 Series Flail Mowers are designed and built to provide excellent cutting and shredding performance on gently sloping or slightly contoured right-of ways, roadsides, ditches, pastures, vineyards, orchards, nurseries, and smaller fields of row crop stalks and residual agricultural growth.

The Flail Mowers are available in four models (FM2548, FM2560, FM2572, and FM2584) with the last two digits in the model number designating mowing width in inches. All models are designed with a 540 rpm Cat. 4 main driveline for attaching to tractors with maximum 80 hp rating. The FM2548 and FM2560 have a Cat. I 3-point hitch and FM2572 and FM2584 have a Cat. I and Cat. II 3-point hitch. The Flail Mowers can be offset to the right for a closer cut alongside buildings, fences, roadsides and around trees with extremely low hanging branches. Their horizontal rotor design greatly reduces the potential of launching projectiles out from under the unit making it an excellent choice for state and municipal mowing.

The FM25 Series are capable of mowing from 0-6 inches (0-15 cm) high and can be equipped with one of three blade options: ducksfoot, heavy-duty Y, and hammer. The ducksfoot blade, capable of cutting through 1" (2.5cm) brush, provides a very respectable quality of mowing for grooming yards, municipal parks, medians, and right-of-ways. The heavy-duty Y blade can cut brush up to 1 1/2" (4 cm) and the machined hammer blade can cut brush up to 2" (5 cm). The heavy-duty Y and hammer blades are well suited for nursery and agricultural applications where heavy grass, brush, prunings, saplings, corn stocks, and other row crop debris are present. Refer to pages 32, 33, and 34 for detailed illustrations of each blade.

The rake teeth are designed to contain brush, small branches, stalks, and other debris in the rotor housing longer to reduce them into mulch-like chips.

See **“Specifications & Capacities”** on page 40 and **“Features & Benefits”** on page 41 for additional information and performance enhancing options.

Using This Manual

- This Operator’s Manual is designed to help familiarize the operator with safety, assembly, operation, adjustments, troubleshooting, and maintenance. Read this manual and follow the recommendations to help ensure safe and efficient operation.
- The information contained within this manual was current at the time of printing. Some parts may change slightly to assure you of the best performance.
- To order a new Operator’s or Parts Manual, contact your authorized dealer. Manuals can also be downloaded, free-of-charge, from our website at www.landpride.com

Terminology

“Right” or “Left” as used in this manual is determined by the direction the operator faces while sitting in the operator’s seat looking forward unless otherwise stated.

Owner Assistance

The dealer should complete the Online Warranty Registration at the time of purchase. This information is necessary to provide you with quality customer service.

The parts on your Flail Mower have been specially designed by Land Pride and should only be replaced with genuine Land Pride parts. Contact a Land Pride dealer if customer service or repair parts are required. Your Land Pride dealer has trained personnel, repair parts, and equipment needed to service the implement.

Serial Number

For quick reference and prompt service, record model and serial number on the inside cover page and again on the warranty page. Always provide model number and serial number when ordering parts and in all correspondences with your Land Pride dealer. For location of your serial number plate, see Figure 1.

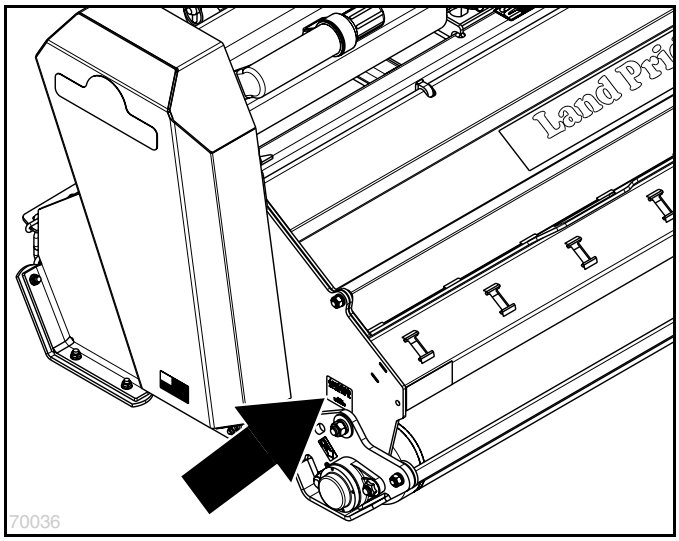

Serial Number Plate Location
Figure 1

Further Assistance

Your dealer wants you to be satisfied with your new Flail Mower. If for any reason you do not understand any part of this manual or are not satisfied with the service received, the following actions are suggested:

1. Discuss any problems you have with your implement with your dealership service personnel so they can address the problem.
2. If you are still not satisfied, seek out the owner or general manager of the dealership, explain the question/problem, and request assistance.
3. For further assistance write to:

Land Pride Service Department
1525 East North Street

P.O. Box 5060
Salina, Ks. 67402-5060

E-mail address
lpservicedept@landpride.com

Tractor Requirements

Tractor horsepower should be within the range noted below. Tractors outside the horsepower range must not be used.

Hitch category
- FM2548 & FM2560 . . . . . 3-Point Cat. I
- FM2572 & FM2584 . . . . . 3-Point Cat. I & Cat. II

Power take-off speed . . . . . .540 rpm

Horsepower requirements: (See note below)
- FM2548. . . . . 28-80 hp (21-60 kW)
- FM2560 . . . . . 33-80 hp (24-60 kW)
- FM2572 . . . . . 42-80 hp (31-60 kW)
- FM2584 . . . . . 49-80 hp (36-60 kW)

NOTE: Minimum horsepower requirements will vary depending on speed, terrain, material load, and material moisture content.

WARNING

To avoid serious injury or death:

Lightweight tractors with rear attached implements may need weights added to the front to maintain steering control. Consult your tractor Operator's Manual to determine proper weight requirements and maximum weight limitations.

Tractor Shutdown Procedure

The following are basic tractor shutdown procedures. Follow these procedures and any additional shutdown procedures provided in your tractor Operator's Manual before leaving the operator's seat.

1. Reduce engine speed and disengage power take-off if engaged.
2. Park tractor and implement on level, solid ground.
3. Lower implement to ground or onto non-concrete support blocks.

NOTE: Due to the over running clutch, the rotor blades will continue to spin after the driveline stops.

4. Put tractor in park or set park brake, turn off engine, and remove switch key to prevent unauthorized starting.
5. Relieve all hydraulic pressure to auxiliary hydraulic lines.
6. Wait for all components to come to a complete stop before leaving the operator's seat.
7. Use steps, grab-handles and anti-slip surfaces when stepping on and off the tractor.

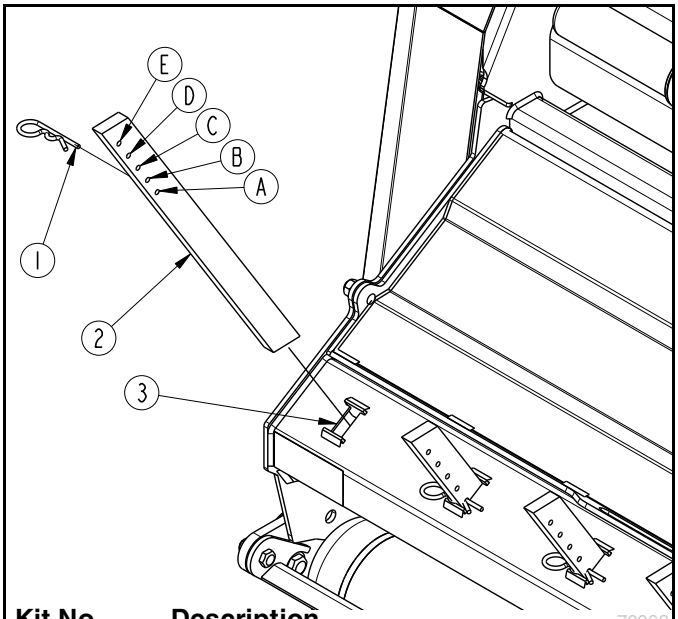

Kit No.	Description
333-090A	FM2548 BRUSH RAKE ASSEMBLY
333-091A	FM2560 BRUSH RAKE ASSEMBLY
333-092A	FM2572 BRUSH RAKE ASSEMBLY
333-093A	FM2584 BRUSH RAKE ASSEMBLY

Optional Brush Rake Assembly
Figure 1-1

Optional Brush Rake Assembly

Refer to Figure 1-1:

The rake teeth are designed to contain brush, small branches, stalks, and other debris in the rotor housing longer to reduce them into mulch-like chips. They work best when used on Flail Mowers fitted with hammer blades or heavy-duty Y blades. For mowing efficiency, remove rake teeth when mowing only grass and when mowing 5" (13 cm) or higher.

The optional Brush Rake Kits can be purchased with the Flail Mower or added to the mower later. Order the kit that matches the Flail Mower's model number.

1. Insert hairpin cotter (#1) in bottom hole A.
2. Position rake tooth (#2) with hairpin cotter holes (A-E) at the top and to the back of the tooth as shown.
3. Insert rake tooth (#2) in slot (#3) until hairpin cotter (#1) is resting on the mower housing.
4. Repeat steps 1-3 to install remaining rake teeth (#2).
5. For adjustment instructions, see **"Adjust Optional Rake Teeth"** on page 25.

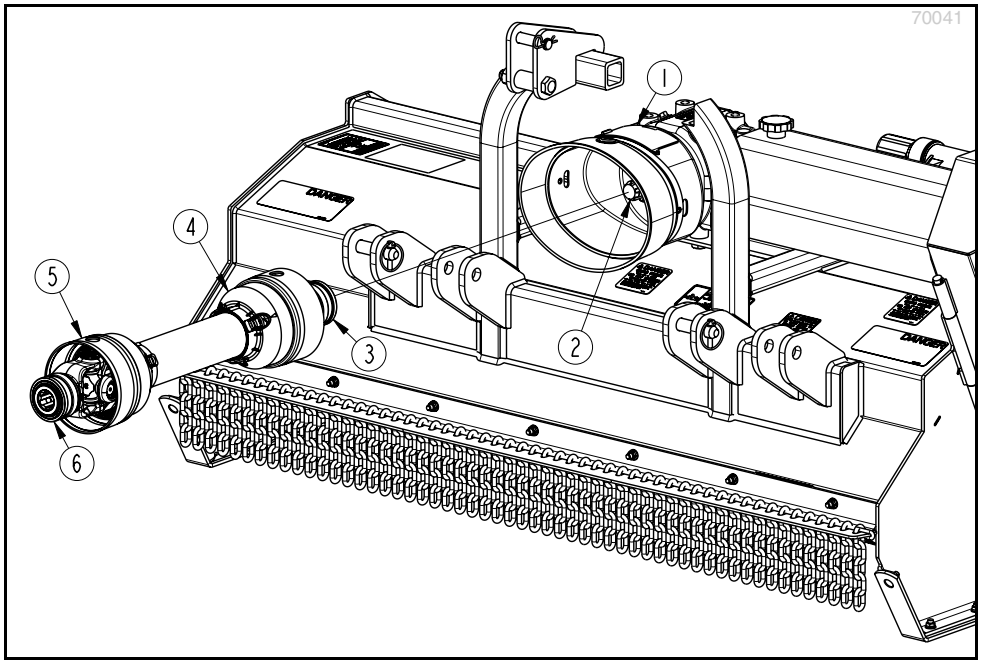

Driveline Installation
Figure 1-2

Driveline Installation

IMPORTANT: An additional driveline may be required if implement is attached to more than one tractor or if a Quick Hitch is used. Refer to the Quick Hitch Operator's Manual for special hook-up instructions.

IMPORTANT: To avoid damaging the driveline, it must be lubricated before putting it into service.

Refer to Figure 1-2:

1. It is easier if driveline (#4) is lubricated before installing it. Refer to **"Main Driveline"** and **"Main Driveline Profile"** on page 38.
2. Unsnap upper cone door (#1) and rotate door 180 degrees.
3. Pull back on driveline inner yoke locking collar (#3) and slide inner yoke onto gearbox input shaft (#2).
4. Release locking collar (#3) and continue to push inner yoke onto the input shaft until locking collar snaps/locks in place.
5. Pull on inner yoke (#4) to verify locking collar (#3) has locked in place.
6. Fully collapse outer driveline (#5) over inner driveline (#4) by pushing outer driveline against inner driveline.
7. Rotate door (#1) shut and snap in place.

Tractor Hook-Up to FM2548 & FM2560

DANGER

To avoid serious injury or death:

A crushing hazard exists while hooking-up and unhooking the implement. Keep people and animals away while backing-up to the implement or pulling away from the implement. Do not operate hydraulic controls while a person or animal is directly behind the power machine or near the implement.

WARNING

To avoid serious injury or death:

Always follow "Tractor Shutdown Procedure" provided in this manual before dismounting the tractor.

IMPORTANT: Always use center hook-up when attaching Flail Mower to any tractor for the first time. This hook-up will provide the shortest distance between tractor and Flail Mower. For additional information, refer to **"Check Driveline Collapsible Length"** on page 19.

Refer to Figure 1-3:

1. The draw bar should be checked for clearance when the Flail Mower is attached for the first time. Move drawbar ahead or remove if it interferes.
2. Remove hairpin cotter (#4), hitch pin (#3), linchpins (#2), and hitch pins (#1).
3. Slowly back tractor up to the mower while using tractor's 3-point hydraulic controls to align lower 3-point arm hitch holes with lower hitch clevis holes using one of two predetermined hook-ups below:
   - Cat. I lower center hitch clevises
   - Cat. I lower 8" (20 cm) offset hitch clevises
4. Shut tractor down properly before dismounting. Refer to **"Tractor Shutdown Procedure"** on page 14.
5. Attach tractor to the mower:

   Center Hook-Up

   a. Attach lower 3-point arms to the lower center hitch clevises with hitch pins (#1) and secure with linchpins (#2).

   b. Attach center 3-point link to the upper center hitch clevis with hitch pin (#3) and secure with hairpin cotter (#4).

   8" Offset Hook-Up

   a. Attach lower 3-point arms to the lower 8" (20 cm) offset hitch clevises with hitch pins (#1) and secure with linchpins (#2).

   b. Attach center 3-point link to the upper 8" (20 cm) offset hitch clevis with hitch pin (#3) and secure with hairpin cotter (#4).
6. Continue with **"Driveline Hook-Up"** on page 18.

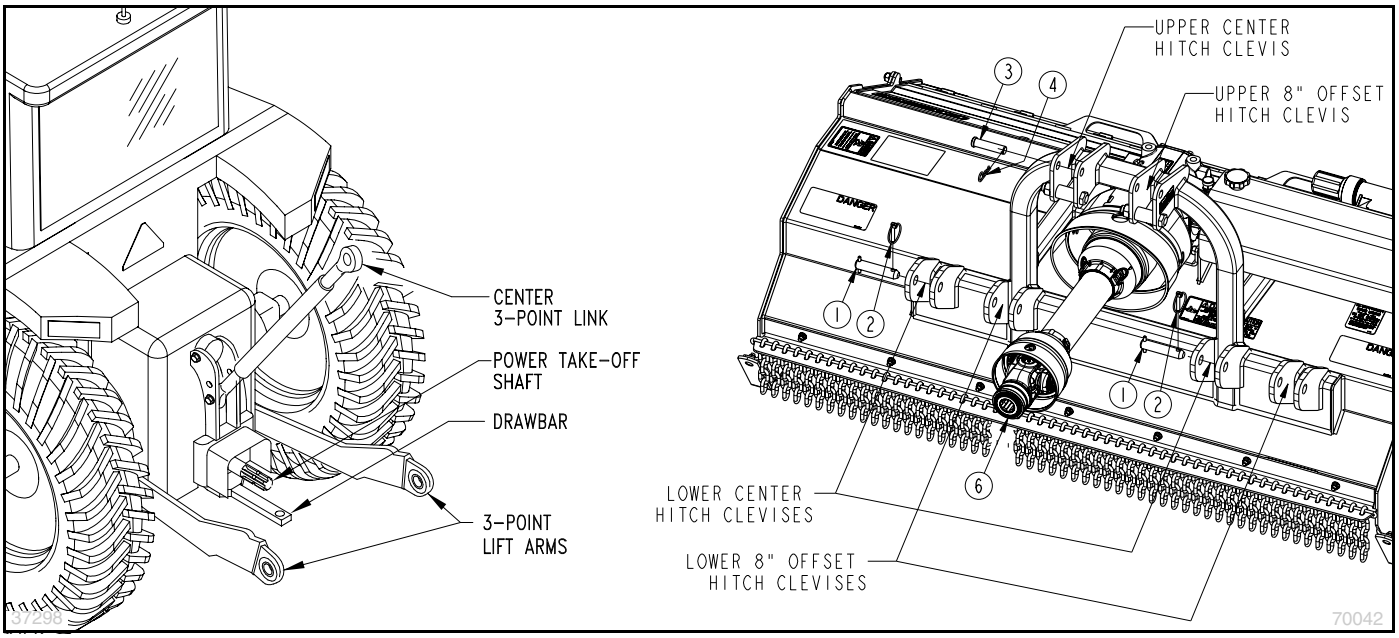

Tractor Hook-up to FM2548 & FM2560
Figure 1-3

Tractor Hook-Up to FM2572 & FM2584

DANGER

To avoid serious injury or death:

A crushing hazard exists while hooking-up and unhooking the implement. Keep people and animals away while backing-up to the implement or pulling away from the implement. Do not operate hydraulic controls while a person or animal is directly behind the power machine or near the implement.

WARNING

To avoid serious injury or death:

Always follow "Tractor Shutdown Procedure" provided in this manual before dismounting the tractor.

IMPORTANT: Always use center hook-up when attaching Flail Mower to any tractor for the first time. This hook-up will provide the shortest distance between tractor and Flail Mower. For additional information, refer to **"Check Driveline Collapsible Length"** on page 19.

Refer to Figure 1-4:

1. The draw bar should be checked for clearance when Flail Mower is attached for the first time. Move drawbar ahead or remove if it interferes.
2. Remove hairpin cotter (#5), hitch pin (#4), linchpins (#3), hairpin cotters (#2), and hitch pins (#1).
3. Slowly back tractor up to the mower while using tractor's 3-point hydraulic controls to align lower 3-point arm hitch holes with lower hitch clevis holes using one of four predetermined hook-ups below:
   - Cat. I lower center hitch clevises
   - Cat. I lower 10" (25 cm) offset hitch clevises
   - Cat. II lower center hitch clevis holes
   - Cat. II lower 10" (25 cm) offset hitch clevis holes
4. Shut tractor down properly before dismounting. Refer to **"Tractor Shutdown Procedure"** on page 14.
5. Attach tractor to mower:

   Hook-Up to 3-Point Cat. I Hitch

   a. Attach lower 3-point arms to lower center hitch clevis or lower 10" (25 cm) offset hitch clevises with hitch pins (#1) and secure with linchpins (#3).

   b. Mover lower 3-point arms against the inside clevises and insert hairpin cotters (#2) in hitch pins (#1) for safe keeping.

   c. Attach center 3-point link to the upper center hitch clevis or upper 10" (25 cm) offset hitch clevis with hitch pin (#4) and secure with hairpin cotter (#5).

   Hook-Up to 3-Point Cat. II Hitch

   a. Attach lower 3-point arms to lower center hitch clevises or lower 10" (25 cm) offset hitch clevises with hitch pins (#1) and secure with hairpin cotters (#2). Store linchpins (#3) in holes provided on the end of hitch pins (#1).

   b. Attach center 3-point link to upper center hitch clevis or upper 10" (25 cm) offset hitch clevis with hitch pin (#4), accessory bushing (#7), and hairpin cotter (#5). Accessory bushing to be purchased by customer (Land Pride #333-240D).
6. Continue with **"Driveline Hook-Up"** on page 18.

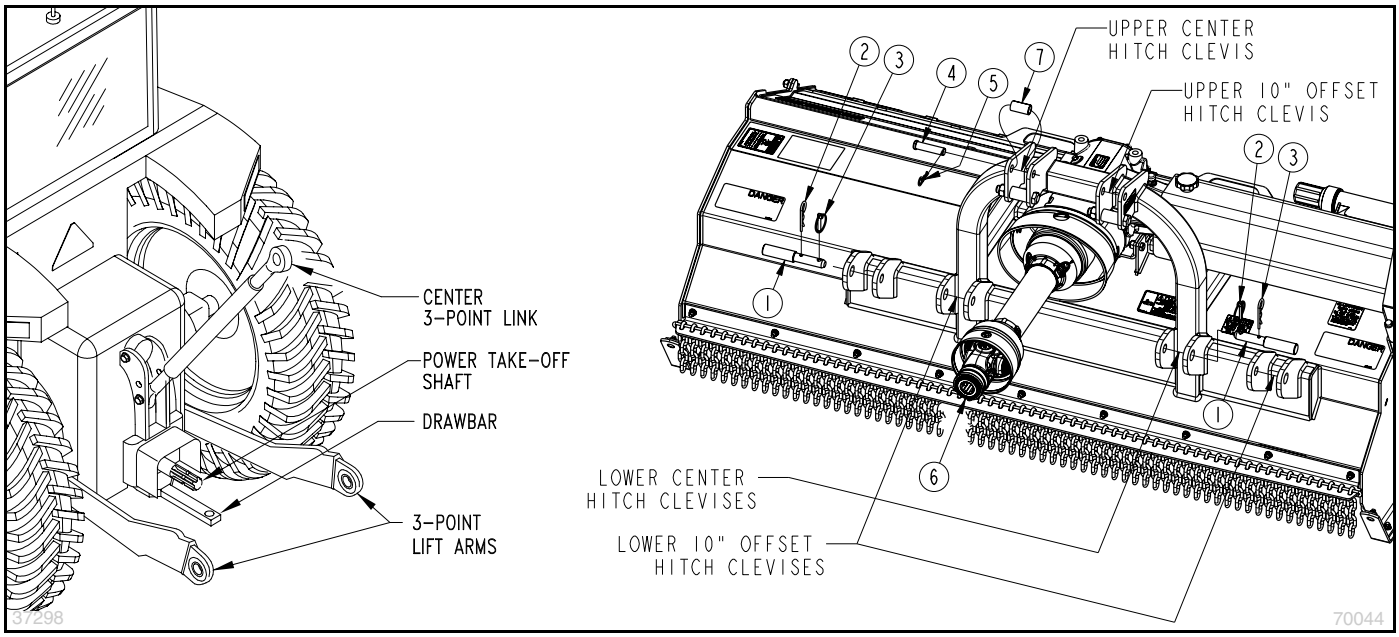

Tractor Hook-up to FM2572 & FM2584
Figure 1-4

Driveline Hook-Up

DANGER

To avoid serious injury or death:

- *All guards and shields must be installed and in good working condition while operating the implement.*
- *Do not engage power take-off while hooking-up or unhooking the driveline, or while someone is standing near the driveline. A person's body and/or clothing can become entangled in the driveline.*
- *Do not use a power take-off adapter. The adapter will increase strain on the tractor's power take-off shaft causing possible damage to shaft and driveline. It will also defeat the purpose of the tractor's power take-off shield.*
- *Make certain driveline yokes are securely fastened at each end. A loose yoke can work free allowing the driveline to rotate uncontrollably.*

WARNING

To avoid serious injury or death:

- *Always follow "Tractor Shutdown Procedure" provided in this manual before dismounting the tractor.*
- *Check driveline when lowering implement to make sure it does not interfere with the tractor drawbar at maximum depth. If needed, shut tractor off and move or remove drawbar to prevent driveline damage.*
- *Some tractors are equipped with two power take-off speeds. Be certain your tractor's power take-off shaft is set-up to operate the implement at its rated power take-off speed. Do not exceed implement's rated power take-off speed. Excessive speed can damage drive components, cutter blades, and/or increase risk of throwing an object. RC models are rated for 540 rpm and RCM models are rated for 1000 rpm.*

IMPORTANT: An additional driveline may be required if implement is attached to more than one tractor or if a Quick Hitch is used.

IMPORTANT: Check driveline minimum collapsible length before completing **"Driveline Hook-Up"** on this page. Structural damage to the tractor and implement can occur if this check is not made. Refer to **"Check Driveline Collapsible Length"** on page 19.

Refer to Figure 1-3 on page 16:

1. If driveline collapsible length has not been checked, go to **"Check Driveline Collapsible Length"** on page 19. Otherwise, continue with step 2 below.
2. Park tractor and implement on a level surface.
3. Shut tractor down before dismounting. Refer to **"Tractor Shutdown Procedure"** on page 14.
4. If tractor drawbar interferes with the driveline during hook-up, disconnect driveline and move drawbar forward, to the side, or remove.
5. Collapse driveline by pushing tractor end of driveline toward the cutter gearbox.
6. Pull back on driveline pull collar (#6) and push yoke onto the tractor power take-off shaft. Release pull collar and continue to push driveline yoke forward until pull collar pops out and locks in place.
7. Pull on driveline yokes at the tractor and implement end to make sure they are secured to the tractor power take-off shaft and implement gearbox shaft.
8. Continue with **"Check Driveline Interference"** on page 20.

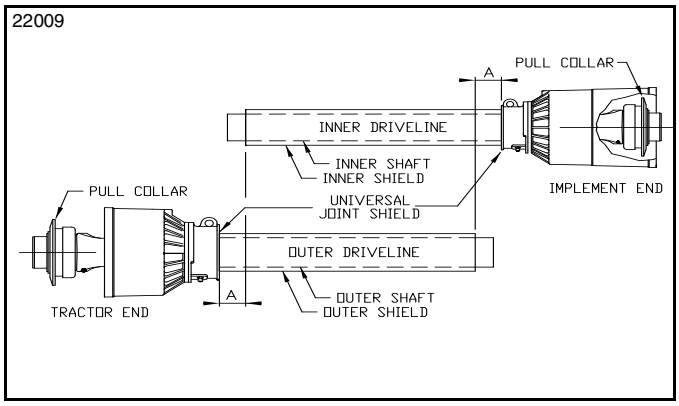

Check Driveline Minimum Length
Figure 1-5

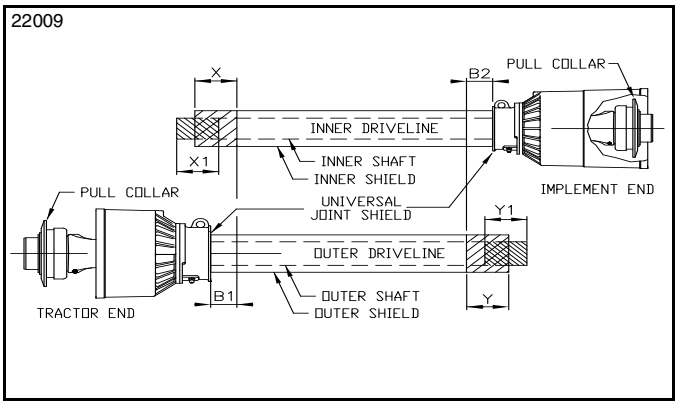

Driveline Shortening
Figure 1-6

Check Driveline Collapsible Length

Refer to Figure 1-5:

> **IMPORTANT:** A driveline that is too long can bottom out causing structural damage to the tractor and implement. Always check driveline minimum length during initial setup, when connecting to a different tractor, and when alternating between using a quick hitch and a standard 3-point hitch. More than one driveline may be required to fit all applications.
>
> **IMPORTANT:** The power take-off shaft and gearbox input shaft must be aligned and level with each other when checking driveline minimum length. A driveline that is too long can damage tractor and implement.

1. Make sure tractor is hooked to the mower's center hitch clevises. If not, reattach the implement to the center hitch clevis before checking driveline collapsible length.
2. With driveline attached only to the 3-point implement, remove outer driveline (tractor end) from inner driveline to separate the two profiles.
3. Park tractor and implement on a level surface.
4. Raise implement until gearbox input shaft is level with tractor power take-off shaft. Securely block implement at this height to keep unit from lowering.
5. Shut tractor down without removing support blocks. Refer to **"Tractor Shutdown Procedure"** on page 14.
6. Attach outer driveline to the tractor's power take-off shaft. Refer to steps 5 -7 under **"Driveline Hook-Up"** on page 18.
7. Hold inner and outer drivelines parallel to each other as shown and measure distance "A".
   - If "A" is less than 1" (2.5 cm) , continue with step 8.
   - If "A" is greater than or equal to 1" (2.5 cm), skip to **"Check Driveline Maximum Length"** on page 20.

Refer to Figure 1-6:

8. Shorten driveline as follows:
   a. Measure 1" (2.5 cm) (**"B1"** dimension) back from outer driveline shield and make a mark at this location on the inner driveline shield.
   b. Measure 1" (2.5 cm) (**"B2"** dimension) back from the inner driveline shield and make a mark at this location on the outer driveline shield.
9. Remove outer driveline from the tractor power take-off shaft and inner driveline from the implement's gearbox shaft.
10. Cut off non-yoke end of inner driveline as follows:
    a. Measure from end of inner shield to scribed mark (**"X"** dimension) and record.
    b. Cut off inner shield at the mark. Cut same amount off the inner shaft (**"X1"** dimension).
11. Cut off non-yoke end of outer driveline as follows:
    a. Measure from end of outer shield to scribed mark (**"Y"** dimension) and record.
    b. Cut off outer shield at the mark. Cut same amount off the outer shaft (**"Y1"** dimension).
12. Remove all burrs and cuttings.
13. Continue with **"Check Driveline Maximum Length"** on page 20.

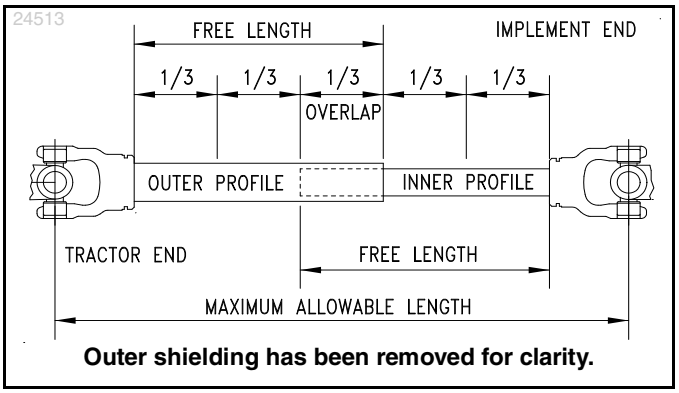

Driveline Maximum Extended Length
Figure 1-6

Check Driveline Maximum Length

Refer to Figure 1-6:

The driveline maximum allowable length must, when fully extended, have a minimum overlap of profile tubes by not less than 1/3 the free length with both inner and outer profile tubes being of equal length.

1. Apply multi-purpose grease to the inside of the outer shaft and reassemble the driveline.
2. Assemble the two driveline profiles together with just 1/3 overlapping of the profile tubes as shown. Once assembled, measure and record maximum allowable length here. _____
3. Reattach driveline to the tractor power take-off shaft and gearbox input shaft. Refer to **"Driveline Installation"** on page 15 and **"Driveline Hook-Up"** on page 18.
4. Continue with **"Check Driveline Interference"** below.

Check Driveline Interference

Refer to Figure 1-F:

WARNING

To avoid serious injury or death:

A rotating driveline must not exceed an angle of 25 degrees up or down, and never engage a driveline while at an angle exceeding 25 degrees up or down. The driveline can break and send projectiles.

1. Start tractor and raise implement slightly off the support blocks used to **"Check Driveline Collapsible Length"**. Drive forward until the implement is clear of the support blocks.

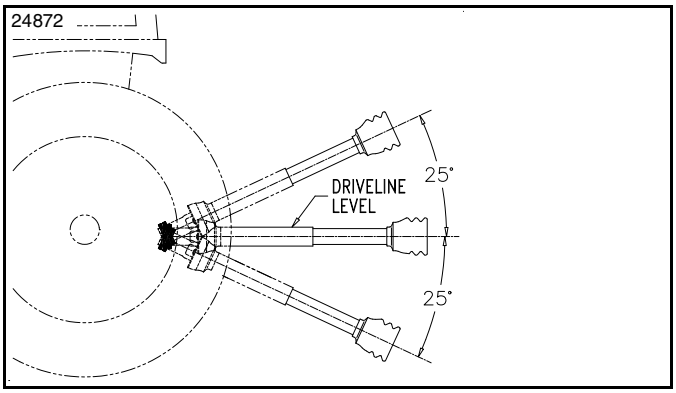

Maximum Driveline Movement During Operation
Figure 1-F

2. Slowly and carefully lower and raise the implement to ensure drawbar, tires, and other equipment on the tractor do not contact the implement's frame. If there is an interference:
   a. Back implement over the support blocks and lower it onto the blocks.
   b. Shut tractor down before dismounting. Refer to **"Tractor Shutdown Procedure"** on page 14
   c. Move or remove drawbar if it interferes with the implement and make any other necessary corrections.
   d. Repeat steps 1-2 to verify the implement does not interfere with the tractor.
3. Start tractor, raise implement fully up. Back implement over the support blocks. Do not lower implement onto the support blocks.
4. Without changing the 3-point lift height, shut tractor down using **"Tractor Shutdown Procedure"** on page 14.
5. Check to make sure driveline does not exceed any of the limits listed below:
   - Driveline does not maximum length recorded in step 2 under **"Check Driveline Maximum Length"** on this page.
   - Driveline angle does not exceed 25° above horizontal.
6. If driveline exceeds maximum allowable length or 25 degrees up:
   a. Adjust tractor 3-point lift limiter to the height that will keep the driveline within the recommended limits.
   b. If the 3-point left lever does not have a lift height limiter, make a mark with tape or other means to indicate maximum lift height.
7. Start tractor, raise implement slightly, and drive forward enough to clear the support blocks.
8. Lower implement to ground and shut tractor down using **"Tractor Shutdown Procedure"** on page 14.

Unhook FM2548 & FM2560

DANGER

To avoid serious injury or death:

A crushing hazard exists while hooking-up and unhooking the implement. Keep people and animals away while backing-up to the implement or pulling away from the implement. Do not operate hydraulic controls while a person or animal is directly behind the power machine or near the implement.

WARNING

To avoid serious injury or death:

Always follow "Tractor Shutdown Procedure" provided in this manual before dismounting the tractor.

Refer to Figure 1-8:

1. See **"Long-Term Storage"** on page 36 if unit is to be stored for a long time.
2. Shut tractor down properly before dismounting. Refer to **"Tractor Shutdown Procedure"** on page 14.
3. Pull back on driveline pull collar (#6) and hold while pulling driveline yoke from tractor power take-off shaft.
4. Collapse driveline by pushing tractor end of driveline towards the reservoir.
5. Support collapsed driveline off the ground to keep dirt away from driveline pull collars and bearings.
6. Remove top center hairpin cotter (#4) and hitch pin (#3). If provided, place center 3-point link in tractor's holding clip.
7. Reinstall hitch pin (#3) in upper clevis and secure with hairpin cotter (#4).
8. Remove linchpins (#2) and hitch pins (#1) from lower 3-point lift arms.
9. Restart tractor and drive forward several feet while making sure lower 3-point arms do not catch on the implement.
10. Shut tractor down properly before dismounting.
11. Reinstall hitch pins (#1) in lower hitch clevises, and secure with linchpins (#2) for safe keeping.

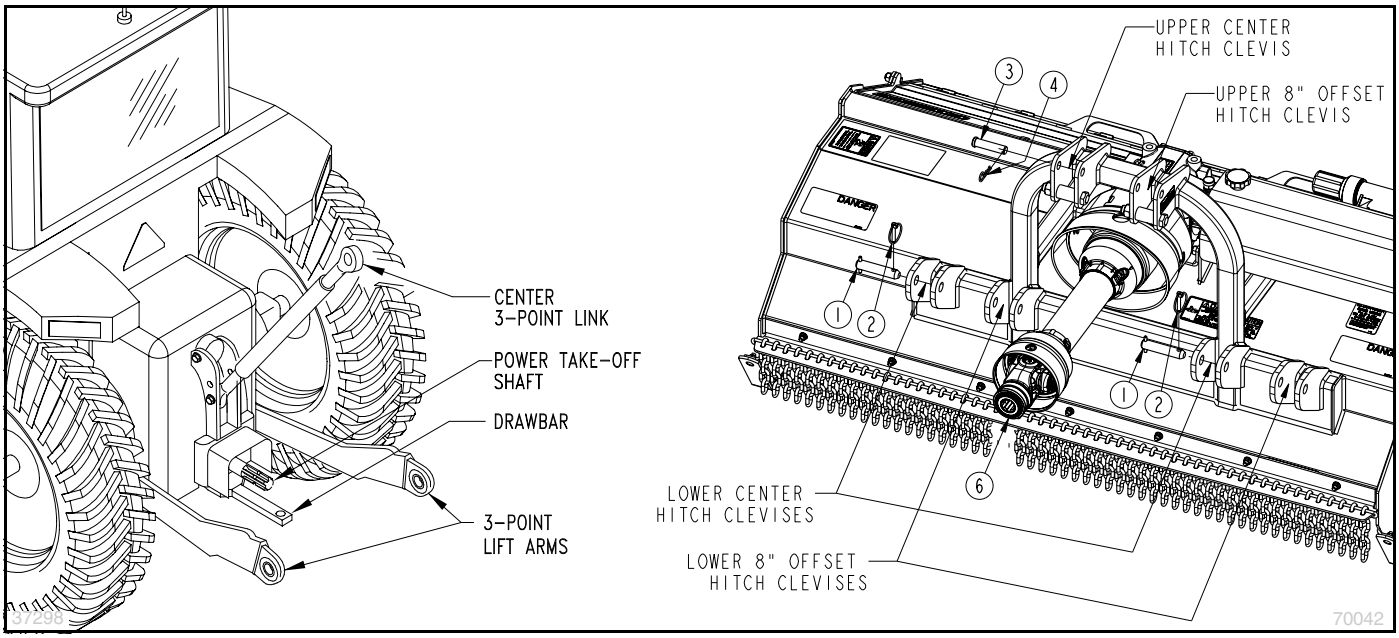

Tractor Hook-up to FM2548 & FM2560
Figure 1-8

Unhook FM2572 & FM2584

DANGER

To avoid serious injury or death:

A crushing hazard exists while hooking-up and unhooking the implement. Keep people and animals away while backing-up to the implement or pulling away from the implement. Do not operate hydraulic controls while a person or animal is directly behind the power machine or near the implement.

WARNING

To avoid serious injury or death:

Always follow "Tractor Shutdown Procedure" provided in this manual before dismounting the tractor.

Refer to Figure 1-9:

1. See **"Long-Term Storage"** on page 36 if unit is to be stored for a long time.
2. Shut tractor down properly before dismounting. Refer to **"Tractor Shutdown Procedure"** on page 14.
3. Pull back on driveline pull collar (#6) and hold while pulling driveline yoke from tractor power take-off shaft.
4. Collapse driveline by pushing tractor end of driveline towards the reservoir.
5. Support collapsed driveline off the ground to keep dirt away from driveline pull collars and bearings.
6. Remove top center hairpin cotter (#5), hitch pin (#4), and accessory bushing (#7). If provided, place center 3-point link in tractor's holding clip.
7. Reinstall hitch pin (#4) and accessory bushing (#7) in upper clevis and secure with hairpin cotter (#5).
8. Remove linchpins (#3), hairpin cotters (#2), and hitch pins (#1) from lower 3-point lift arms.
9. Restart tractor and drive forward several feet while making sure lower 3-point arms do not catch on the implement.
10. Shut tractor down properly before dismounting.
11. Reinstall hitch pins (#1) in lower hitch clevises, and secure with hairpin cotters (#2) and linchpins (#3) for safe keeping.

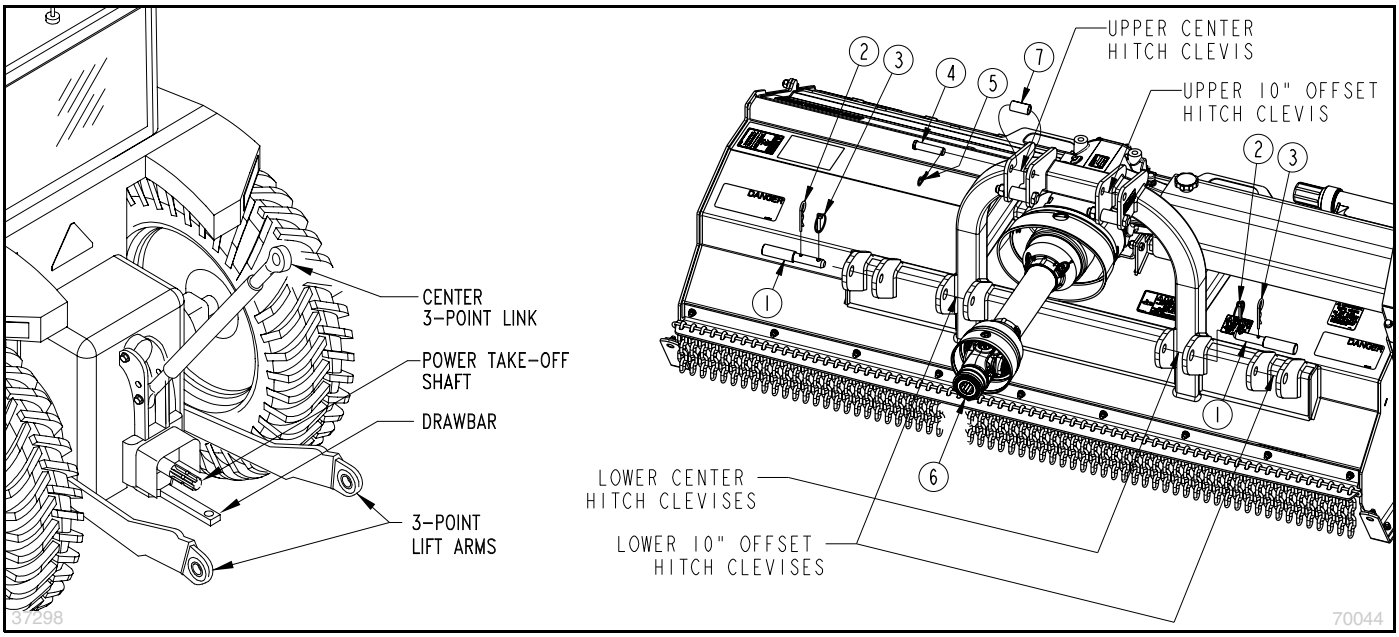

Tractor Hook-up to FM2572 & FM2584
Figure 1-9

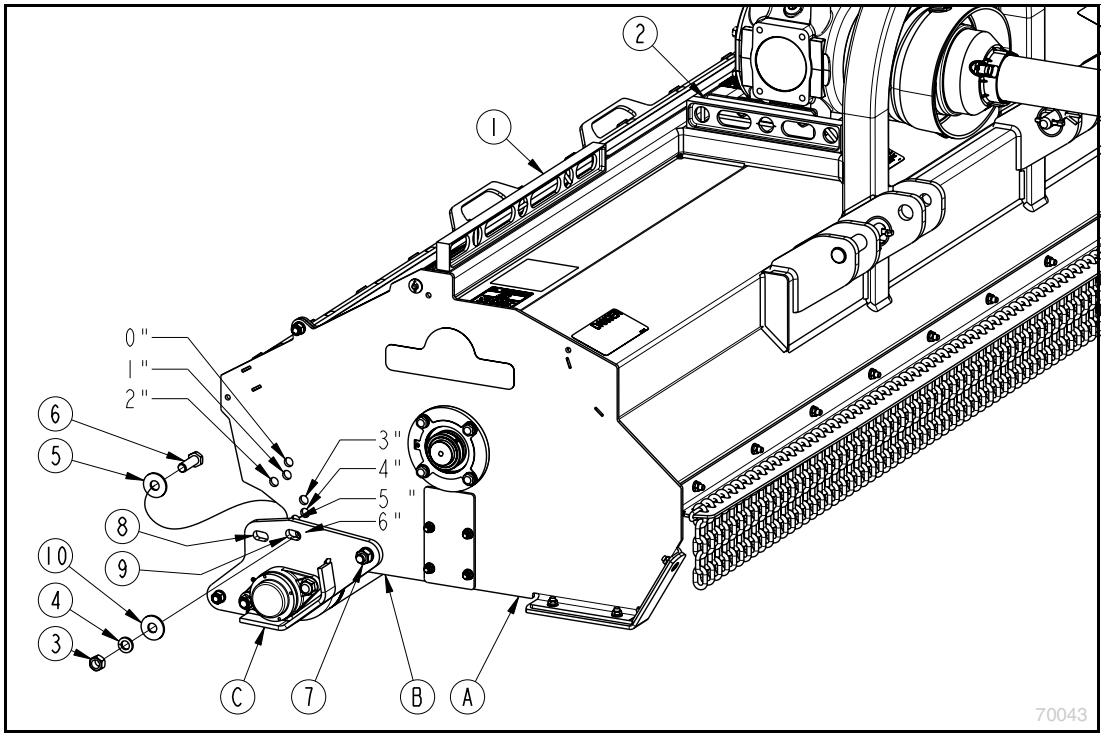

Cutting Height Adjustment & Leveling (Shown at Maximum 6" (15 cm) Cutting Height)
Figure 2-1

Cutting Height Adjustment

Refer to Figure 2-1:

The flail mower can be adjusted to cut seven different heights ranging from 0"-6" (0-15 cm) in increments of 1" (2.5 cm). The first three cutting heights [0"-2" (0-5 cm)] align with slot (#8). The next four cutting heights [3"-6" (8-15 cm)] align with slot (#9).

1. Shut tractor down properly before dismounting. Refer to **"Tractor Shutdown Procedure"** on page 14.
2. Remove hex nut (#3), lock washer (#4), large flat washer (#10), flat washer (#5), and hex bolt (#6) on the left side and right side of mower.
3. Loosen hex nut (#7) on both sides of the mower. Do not remove nut.
4. Return to the tractor seat and raise 3-point lower arms until mower is at the desired cutting height or slightly higher.
5. Without changing 3-point arm height, shut tractor down properly before dismounting.
6. If needed, use a pry bar under bearing guard (A) to raise rear roller until slot (#8 or #9) align with desired mowing height hole (0", 1", 2", 3", 4", 5", or 6") (0, 3, 5, 8, 10, 13, or 15 cm).
7. Insert bolt (#6) through flat washer (#5), desired cutting height hole (0", 1", 2", 3", 4", 5", or 6") (0, 3, 5, 8, 10, 13, or 15 cm) and slot (#8 or #9) in rear roller pivot plate.
8. Secure bolt (#6) with large flat washer (#10), lock washer (#4) and nut (#3). Draw nut up snug. Do not tighten at this time.
9. Repeat steps 6-8 on the other side of the mower.
10. Tighten hex nuts (#3 & #7) on both sides of the mower to the correct torque for a 5/8"-11 GR5 bolt.

Level Flail Mower

Refer to Figure 2-1:

For optimum cutting performance, always level the mower after adjusting its cutting height.

1. Park tractor on a level surface and shut tractor down properly before dismounting. Refer to **"Tractor Shutdown Procedure"** on page 14.
2. Place level (#2) on the mainframe as shown and adjust tractor's center 3-point link longer or shorter until mower is level from front to back.
3. Place level (#1) on the mainframe as shown and adjust one of the tractor's lower 3-point arms up or down to level the mower left to right.
4. Recheck levelness front to back and left to right. If needed, repeat steps 2 & 3 until mower is level in both directions.

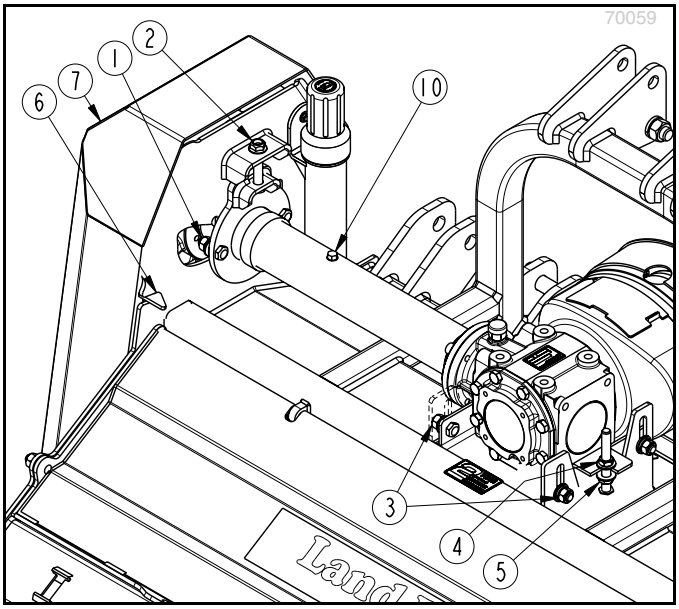

Adjust FM2548 Belt Drive Tension
Figure 2-2

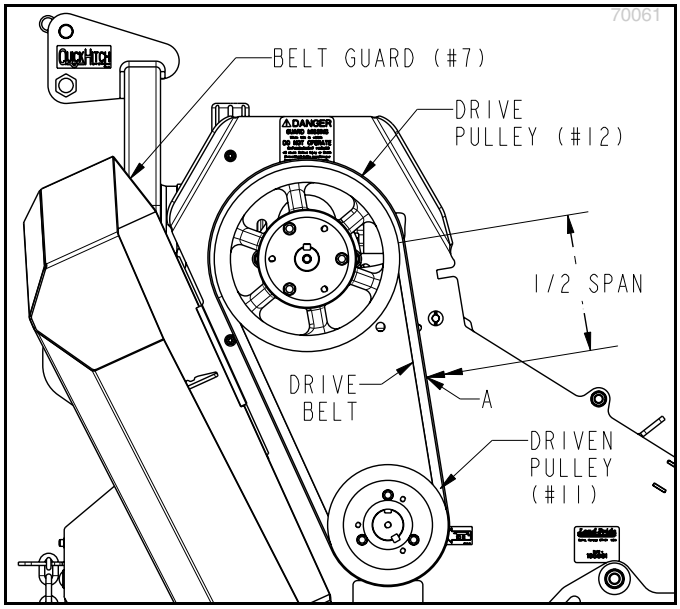

Measure Belt Tension Force at Mid Span
Figure 2-3

Tension FM2548 Drive Belt

Refer to Figure 2-2 & Figure 2-3:

Check Drive Belt Tension

> **IMPORTANT:** Excessive belt tension can damage drive belt and drive components. Insufficient belt tension can cause excessive belt slippage, loss of rotor rpm, and destroy drive belt.
>
> **IMPORTANT:** Belt tension should be rechecked on new belts after approximately 20 hours of operation.

1. Shut tractor down properly before dismounting. Refer to **"Tractor Shutdown Procedure"** on page 14.
2. Pull back on latch (#6) and open belt guard (#7).
3. Check belt tension by applying force at 1/2 the belt span (arrow "A") with a tension tester until belt deflects 1/4" (6 mm). The force required to get this deflection should be 13-14 lbs (5.9-6.4 kgs).

Increase Drive Belt Tension

The gearbox and drive pulley must be adjusted up equally to maintain drive and driven pulley alignment.

1. Loosen two hex nuts (#1) located inside belt guard (#7) and four hex nuts (#3) located on both sides of the gearbox.
2. Loosen upper nut (#4) 3 or more full turns.
3. Adjust drive pulley (#12) up with hex flange lock nut (#2). Count number of turns locknut (#2) makes to increase drive belt tension.
4. Adjust lower jam nut (#5) up the same number of turns locknut (#2) was adjusted to level output shaft (#10) and align drive and driven belt pulleys.
5. Check belt tension at 1/2 belt span to verify it is 13-14 lbs (5.9-6.4 kgs) with 1/4" (6 mm) deflection.
6. If needed, adjust hex flange locknut (#2) and lower jam nut (#5) up or down equal number of turns until belt tension of 13 to 14 lbs is achieved.
7. Tighten upper jam nut (#4) against jam nut (#5).
8. Tighten hex nuts (#1 & #4) to the correct torque for 1/2"-13 GR5 bolt.
9. Close belt guard (#7). Make sure latch (#6) is caught on the belt guard back plate.

Decrease Drive Belt Tension

The gearbox and drive pulley must be adjusted down equally to maintain drive and driven pulley alignment.

1. Loosen two hex nuts (#1) located inside belt guard (#7) and four hex nuts (#3) located on both sides of the gearbox.
2. Loosen upper nut (#4) 3 or more full turns.
3. Adjust drive pulley (#12) down with hex flange lock nut (#2). Count number of turns locknut (#2) makes to decrease drive belt tension.
4. Adjust lower jam nut (#5) down the same number of turns locknut (#2) was adjusted to level output shaft (#10) and align drive and driven belt pulleys.
5. Check belt tension at 1/2 belt span to verify it is 13-14 lbs (5.9-6.4 kgs) with 1/4" (6 mm) deflection.
6. If needed, adjust hex flange locknut (#2) and lower jam nut (#5) up or down equal number of turns until belt tension of 13 to 14 lbs is achieved.
7. Tighten upper jam nut (#4) against jam nut (#5).
8. Tighten hex nuts (#1 & #4) to the correct torque for 1/2"-13 GR5 bolt.
9. Close belt guard (#7). Make sure latch (#6) is caught on the belt guard back plate.

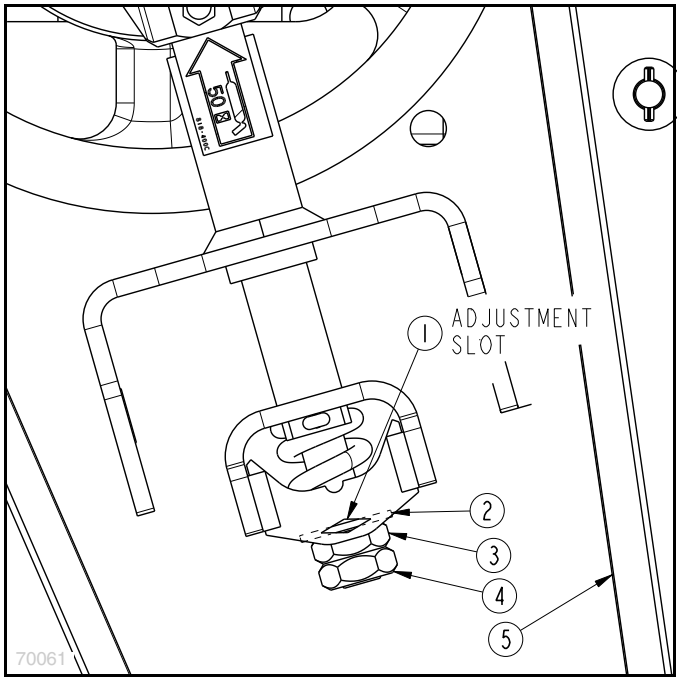

Adjust FM2560, FM2572, & FM2584 Belt Drive Tension
Figure 2-4

Tension FM2560/72/84 Drive Belt

Refer to Figure 2-4:

> **IMPORTANT:** Excessive belt tension can damage drive belt and drive components. Insufficient belt tension can cause excessive belt slippage, loss of rotor rpm, and destroy drive belt.
>
> **IMPORTANT:** Belt tension should be rechecked on new belts after approximately 20 hours of operation.

1. Shut tractor down properly before dismounting. Refer to **"Tractor Shutdown Procedure"** on page 14.
2. **Refer to Figure 2-2 on page 24:** Pull back on spring-loaded latch (#6) and open belt guard (#7).
3. Check belt tension by verifying flat washer (#2) is centered in adjustment slot (#1) as shown.
4. If washer (#2) is not centered in adjustment slot (#1), loosen lower jam nut (#4) and tighten or loosen upper jam nut (#3) until flat washer (#2) is centered in adjustment slot (#1).
5. Tighten jam nut (#4) to the correct torque against jam nut (#3).
6. **Refer to Figure 2-2 on page 24:** Close belt guard door (#7). Make sure latch (#6) is caught on the belt guard back plate.

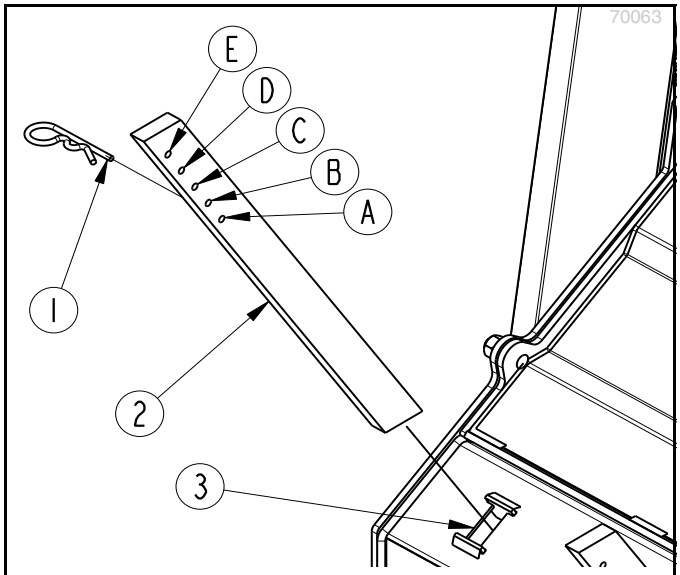

Mowing Height	Cotter Pin Position
0" (0 cm)	Hole A
1" (3 cm)	Hole B
2" (5 cm)	Hole C
3" (8 cm)	Hole D
4" (10 cm)	Hole E
5" (13 cm)	Remove teeth
6" (15 cm)	Remove teeth

Adjust Optional Rake Teeth
Figure 2-5

Adjust Optional Rake Teeth

Refer to Figure 2-5:

The rake teeth are designed to float over the ground while mowing between 0" and 4" (0 and 10 cm). They should not be used when cutting only grass, when cutting 5" (13 cm) and higher, and when mulching is not needed.

> **IMPORTANT:** Make sure hairpin cotter (#1) is always used and inserted in correct hole (A-E) for the mowing height. Rake teeth (#2) can be damaged if hairpin cotter (#1) is not inserted into the correct hole or not used.

1. Shut tractor down properly before dismounting. Refer to **"Tractor Shutdown Procedure"** on page 14.
2. Pull rake tooth (#2) out of slot (#3) and remove cotter pin (#1).
3. Check table in Figure 2-5. Replace cotter pin (#1) in hole (A-E) that corresponds to the hight the mower is set to cut. Example: If mowing height is 3" (8 cm), place cotter pin (#1) in hole D.
4. Insert rake tooth (#2) in slot (#3) until cotter pin (#1) is resting on the mower housing.
5. Repeat steps 2-4 for the remaining rake teeth (#2).

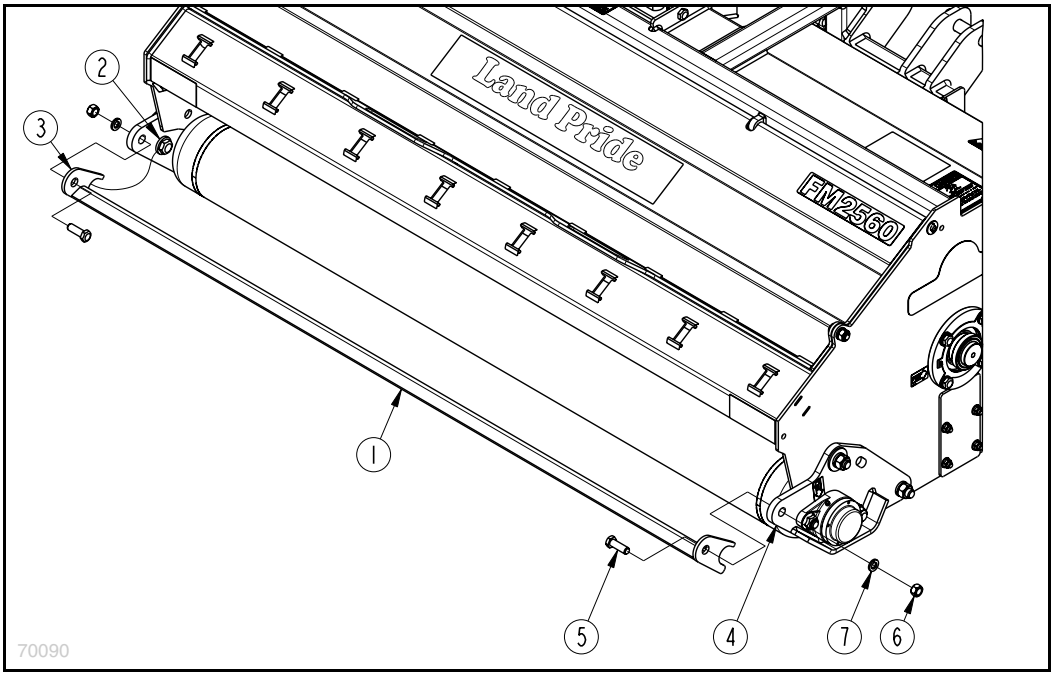

Rear Roller Scraper
Figure 2-6

Rear Roller Scraper

Refer to Figure 2-6:

The rear roller scraper is standard on the Flail Mower. Its main function is to remove moist dirt and/or wet clumps of debris collecting on the roller. The scraper should be removed when it is preventing grass from exiting the rear of the mower.

Scraper Removal

1. Shut tractor down properly before dismounting. Refer to **"Tractor Shutdown Procedure"** on page 14.
2. Remove hex nuts (#6), lock washers (#7), hex head bolts (#5), and roller scraper (#1).
3. Store scraper (#1) with hardware (#5,# 6, & #7) in a dry location for reattaching to remove building-up of wet grass and dirt on the rear roller.

Scraper Attachment

1. Shut tractor down properly before dismounting. Refer to **"Tractor Shutdown Procedure"** on page 14.
2. Slide open flanged ends (#3) over flat washers (#2).
3. Attach flanged ends (#3) to end mounts (#4) with 1/2"-13 x 1 1/2" GR5 hex head bolts (#5), lock washers (#7) and hex nuts (#6).
4. Tighten hex nuts (#6) to the correct torque.

Operator's Responsibilities

Hazard control and accident prevention are dependent upon the awareness, concern, prudence, and proper training involved in the operation, transport, storage, and maintenance of the Flail Mower. Therefore, it is absolutely essential that no one operates the mower unless they are have read, fully understood, and are totally familiar with the Operator's Manual. Make sure the operator has paid particular attention to:

Important Safety Information, page 1

- **Section 1: Assembly & Set-up,** page 14
- **Section 2: Adjustments,** page 23
- **Section 3: Operating Procedures,** page 27
- **Section 4: Maintenance & Lubrication,** page 30

Perform the following inspections before using your Flail Mower.

Operating Checklist

✔	Check	pg
	Read and follow safety information carefully. Refer to "Important Safety Information".	1
	Make sure all guards and shields are in place. Refer to "Important Safety Information".	1
	Read and follow tractor hook-up instructions. Refer to "Section 1: Assembly & Set-up".	14
	Read and make all required adjustments. Refer to "Section 2: Adjustments".	23
	Read and follow all operating procedures. Refer to "Section 3: Operating Procedures".	27
	Read and follow all maintenance instructions. Refer to "Section 4: Maintenance & Lubrication".	30
	Read and follow all lubrication instructions. Refer to "Lubrication Points".	37
	Make sure the gearbox is properly lubricated. Refer to "Gearbox Lubrication"	39
	Check mower initially and periodically for loose bolts and pins. Especially make sure mower blade bolts are tight. Refer to "Torque Values Chart".	42

Safety Information

DANGER

To avoid serious injury or death:

- *All guards and shields must be installed and in good working condition while operating the implement.*
- *Do not engage power take-off while hooking-up or unhooking the driveline, or while someone is standing near the driveline. A person's body and/or clothing can become entangled in the driveline.*
- *Do not allow anyone near the tractor or implement while operating. Stop operation if bystanders are too close. They can be hit by flying projectiles, become entangled in the equipment, or ran over.*

WARNING

To avoid serious injury or death:

- *Allow only persons to operate this implement who have fully read and comprehended this manual, and who have been properly trained in the safe operation of this implement. Serious injury or death can result from the inability to read, understand, and follow instructions provided in this manual.*
- *Never operate Flail Mower without rear rotor access door secured in the closed position. The power take-off must be disengaged, tractor engine turned off, and switch key removed before opening the door. Always secure door shut before starting tractor.*
- *Never carry riders on the implement or tractor. Riders can obstruct the operator's view, interfere with controls, be pinched by moving components, become entangled in rotating components, struck by objects, thrown about, fall off and be run over, etc.*
- *Do not operate and/or travel across inclines where the tractor and/or implement can rollover. Consult your tractor's manual for acceptable inclines the tractor is capable of traveling across.*
- *Always follow "Tractor Shutdown Procedure" provided in this manual before dismounting the tractor.*
- *The ducksfoot blade is designed to cut grass and brush up to 1" (2.5 cm) diameter, heavy-duty Y blades up to 1 1/2" (4 cm) diameter, and hammer blades up to 2" (5 cm) diameter. Using this mower for any other type of work can damage the cutting components, drive components, mower frame, and tractor.*
- *Select a safe ground speed that will allow adequate control of steering and stopping. Never exceed 20 mph (32.2 km/h) with attached equipment. Rough terrain requires a slower speed.*
- *Do not use implement as a man lift, work platform or as a wagon to carry objects. It is not properly designed or guarded for this use.*
- *Do not use implement to lift objects; to pull objects such as fence posts, stumps, etc; or to push objects. The unit is not designed or guarded for these uses.*
- *A rotating driveline must not exceed an angle of 25 degrees up or down, and never engage a driveline while at an angle exceeding 25 degrees up or down. The driveline can break and send projectiles.*
- *Do not operate a broken or bent driveline. Such a driveline will break apart while rotating at high speeds. Always remove the implement from use until the damaged driveline can be repaired or replaced.*
- *Some tractors are equipped with two power take-off speeds. Be certain your tractor's power take-off shaft is set-up to operate at 540 rpm. Do not exceed 540 rpm power take-off speed. Excessive speed can damage drive components, cutter blades, and/or increase risk of throwing an object.*

Transporting

WARNING

To avoid serious injury or death:

When traveling on roadways, travel in such a way that other vehicles may pass you safely. Always use LED lights, clean reflectors, and a slow moving vehicle sign that is visible from the back to warn operators in other vehicles of your presence. Always comply with all federal, state, and local laws.

NOTE: Always disengage power take-off before raising mower to transport position.

1. When raising mower to transport position, be sure driveline does not contact tractor or mower. If needed, adjust and set tractor 3-point lift height to limit mower movement and to protect driveline.
2. Be sure to reduce tractor ground speed when turning, leaving enough clearance so that the mower does not contact obstacles such as buildings, trees, fences, etc.
3. Select a safe ground travel speed when transporting from one area to another. When traveling on roadways, transport in such a way that faster moving vehicles may pass safely.
4. When traveling over rough or hilly terrain, shift tractor to a lower gear.

Mowing Instructions

1. Clear area to be mowed of objects and debris that might be picked up and thrown by the mower blades. Do not use mower on stony ground.
2. Make the following machine checks before operating the mower.
   - All hook-up pins should be secured.
   - All guards and shields should be secured in place.
   - All bolts and nuts should be present and tight.
   - Make sure all blades are properly secured and in good working order.
3. Grass is best cut when dry. Mowing wet grass can cause plugging and leave clumps of cut grass.
4. Grass should be mowed frequently as shorter clippings deteriorate faster.
5. If mowing extremely tall grass, it is best to cut the area with mower set at 6" (15 cm) cutting height. After completing the cut at 6" (15 cm) high, cut the area again with mower set at the desired cutting height.

Brush Rake Teeth

If Flail Mower is equipped with adjustable rake teeth, adjust teeth closer to the ground to allow continued chopping of brush, branches, stalks, etc into fine cuttings or raise teeth up to discharge material quickly. See **"Adjust Optional Rake Teeth"** on page 25.

Operating Instructions

CAUTION

To avoid minor or moderate injury:

Excessive wear may occur to the mower blades when mowing in sandy soil. Frequent inspection should be made and blades replaced if worn excessively or damaged.

The following inspection and checks should be made with the tractor and mower shut down properly. Refer to **"Tractor Shutdown Procedure"** on page 14.

1. Check oil level in gearbox. Refer to **"Gearbox Lubrication"** on page 39.
2. Check all plugs in the gearbox and output shaft housing [48" (122 cm) only] to make sure they are in place and tight.
3. Be sure all mower blades, bolts, and nuts are tight.
4. Make sure all guards and shields are in place and secure.
5. Grease all zerk fittings and driveline profiles.
6. Clear area to be mowed of rocks, large limbs, and other foreign objects. Do not use mower on stony ground.
7. Return to the tractor seat and with mower on the ground, start tractor. Set engine speed at low idle and engage power take-off to start blades rotating. Once blades are operating smoothly, increase engine speed to power take-off speed of 540 rpm.
8. At first, begin mowing in a lower gear and shift up until desired ground speed is achieved with engine operating at 540 rpm power take-off speed.
9. After mowing the first 50 feet, stop and check mower to make sure it is adjusted properly.

IMPORTANT: Turning with mower on the ground will cause premature rear roller bearing wear.

10. Always raise mower up to make sharp turns and to back-up. **Do not** back up or make sharp turns with mower on the ground.
11. Stay away from steep inclines and sharp drop-offs.
12. **Do not** engage power take-off with mower fully raised. **Do not** engage power take-off at full throttle. **Do not** lift mower fully up with power take-off engaged.
13. Keep everyone away while mower is operating. **Do not** get off the tractor with the mower operating.
14. Periodically shut tractor down properly and check for foreign objects wrapped around the rotor. Remove any foreign object before returning to the tractor to continue mowing.

General Operating Instructions

Now that you have familiarized yourself with the Operator's Manual, completed Operator's Checklist, properly attached your Flail Mower to your tractor, made the right offset or center adjustments, and preset your cutting height, you're almost ready to begin using your Land Pride FM25 Series Flail Mower.

It's now time to do a running operational safety check. If at any time during this safety check you detect a malfunction in either the mower or tractor shut the tractor off immediately, remove switch key, and make necessary repairs or adjustments before continuing on.

Make sure the tractor's park brake is engaged, the tractor's power take-off is disengaged, and the mower is resting on the ground. Start tractor and then back tractor throttle off until the engine is at low idle. With the tractor's rear hydraulic 3-point lift control lever, raise mower to transport position making sure that the driveline is not in a bind and does not come in contact with the mower frame. Lower unit to cutting position and, with the tractor still at low idle, engage power take-off. If everything is running smoothly at this point, increase engine rpm until the tractor's engine reaches full power take-off operating speed, which will be 540 rpm. Slowly raise mower to transport height to make sure the driveline does not bind or chatter. Then return engine to low idle, disengage power take-off, and position adjustable stops on the tractor's hydraulic lift lever control console so the cutter can be consistently returned to the same cutting and transport height.

You should now be ready to move to the cutting site and begin mowing. Make sure you have inspected the area you will be cutting and have removed any debris or objects that should not be cut with the mower. Never assume an area is clear. Extremely tall grass or brush should be cut twice to detect potential hazards. In the event you do strike an object, stop the tractor and mower immediately to inspect the rotor and make any necessary repairs before resuming operation. It pays to inspect a new area and to develop a plan before you cut.

Normal mowing speed is between 2-5 mph with power take-off speed maintained at 540 rpm to produce a clean cut. Make tractor gear and range selection that will maintain this combination. Generally the quality of cut or degree of debris pulverization will be better at lower ground speeds. Cutting denser ground cover or heavier brush may create the need to slow down. Always cut downward on slopes and avoid crossing the face of steep slopes. Avoid sharp drop offs and cross diagonally through dips to prevent tractor and mower hang ups. Slow down when turning and avoid sharp turns if at all possible. Remember to look back often.

Now you're prepared and well briefed so let's begin cutting. Reduce the tractor's engine rpm, make sure the mower is on the ground and in cutting position, engage the power take-off, raise the engine rpm to the appropriate power take-off speed, and begin mowing. Operators must plan ahead and choose a cutting route that allows safe turns. Try increasing or decreasing ground speed to determine the effect on quality of cut. With a little practice you will be pleased with what you and your Land Pride Flail Mower can do.

If you are cutting with the Flail Mower and using the hammer blades and the standard brush rake teeth you will accumulate and force more material into the rotor for pulverization. This will require more horsepower and will require you to slow down especially if you are encountering material up to 2" (5 cm) in diameter. The ducksfoot blades on the Flail Mower are much better suited for a finer quality of cut in grass cutting applications and in no case should ducksfoot blades be used for cutting material greater than 1" (2.5 cm) in diameter.

The FM25 flail mower is equipped to perform well in shredding applications, and can effectively shred prunings in between vineyard and orchard rows, overgrown weeds, and many other forms of agricultural residue. Adjustment of the rear roller and brush rakes is critical to achieve optimum shredding performance in your specific application.

Lowering the rear roller to increase mowing height (3 to 4 inches), adjusting the brush rakes accordingly, and leveling the mower will allow more material to enter the mower housing and provide better material flow while shredding. These adjustments will help prevent loose material from catching on the chain guards and piling up in front of the mower.

To finely shred material, the rear discharge opening of the flail mower must be as small as possible. The rear roller must be set to a cut height of 0-2 inches, and the brush rakes must be installed to constrict material discharge flow for a more complete pulverization. The tractor must be driven at a slow ground speed while shredding material this fine.

Shredding conditions will be unique to your situation, but with a little effort and experimentation, the FM25 can be adjusted to meet your shredding needs.

When you are done mowing, need to take a break, or just need to make a few adjustments to the mower, remember to always do the following. Reduce tractor engine rpm, disengage power take-off, stop on level ground, set tractor park brake, turn off the engine, and remove switch key.

Maintenance

Proper servicing and adjustments are key to the long life of any implement. With careful inspection and routine maintenance, you can avoid costly downtime and repair.

After using the mower for several hours, check all bolts to be sure they are tight and check drive belt tension. Refer to **"Tension FM2548 Drive Belt"** on page 24 or **"Tension FM2560/72/84 Drive Belt"** on page 25.

Replace any worn, damaged, or illegible safety labels by obtaining new labels from your Land Pride dealer.

Lubricate components as listed under **"Lubrication Points"** on page 37.

DANGER

To avoid serious injury or death:

Always secure equipment with solid, non-concrete supports before working under it. Never go under equipment supported by concrete blocks or hydraulics. Concrete can break, hydraulic lines can burst, and/or hydraulic controls can be actuated even when power to hydraulics is off.

WARNING

To avoid serious injury or death:

- *Make sure controls are all in neutral position or park before starting the power machine.*
- *Perform scheduled maintenance. Check for loose hardware, missing parts, broken parts, structural cracks, and excessive wear. Make repairs before putting the implement back into service.*
- *Allow only persons to perform maintenance on this implement who have been properly trained in its safe operation.*
- *Do not alter implement or replace parts on the implement with other brands. Other brands may not fit properly or meet OEM (Original Equipment Manufacturer) specifications. They can weaken the integrity and impair the safety, function, performance, and life of the implement. Replace parts only with genuine OEM parts.*
- *Always keep your body extremities out from under the rake teeth and cutting blades while removing, installing, and adjusting them.*
- *Always shut tractor down using "Tractor Shutdown Procedure" provided in this manual before servicing, adjusting, cleaning, or maintaining this implement.*

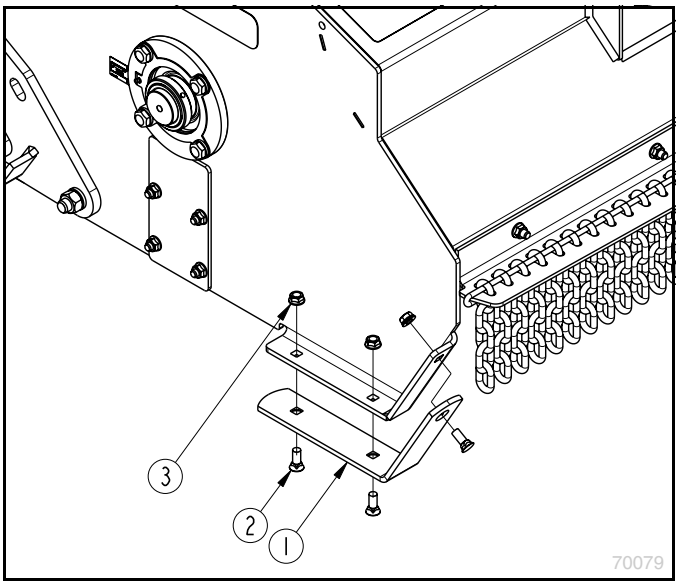

Replace Skid Shoes
Figure 4-1

Replace Skid Shoes

Refer to Figure 4-1:

Item	Pt. No.	Description for 1 Skid Shoe	Qty
1	333-077D	FM25 Replaceable Skid Shoes	1
2	802-603C	Plow bolt 3/8"-16 x 1" GR5	3
3	803-198C	Nut, Hex Whiz 3/8" - 16 PLT	3

1. Remove hex whiz nuts (#3), plow bolts (#2), and skid shoe (#1).
2. Inspect plow bolts (#2) and hex whiz nuts (#3) for wear. Replace as needed.
3. Attach new skid shoe (#1) to the right-hand-side with existing or new 3/8"-16 x 1" GR5 plow bolts (#2) and secure with hex whiz nuts (#3). Tighten hex whiz nuts to the correct torque.
4. Repeat steps 1-3 above for the left-hand side.

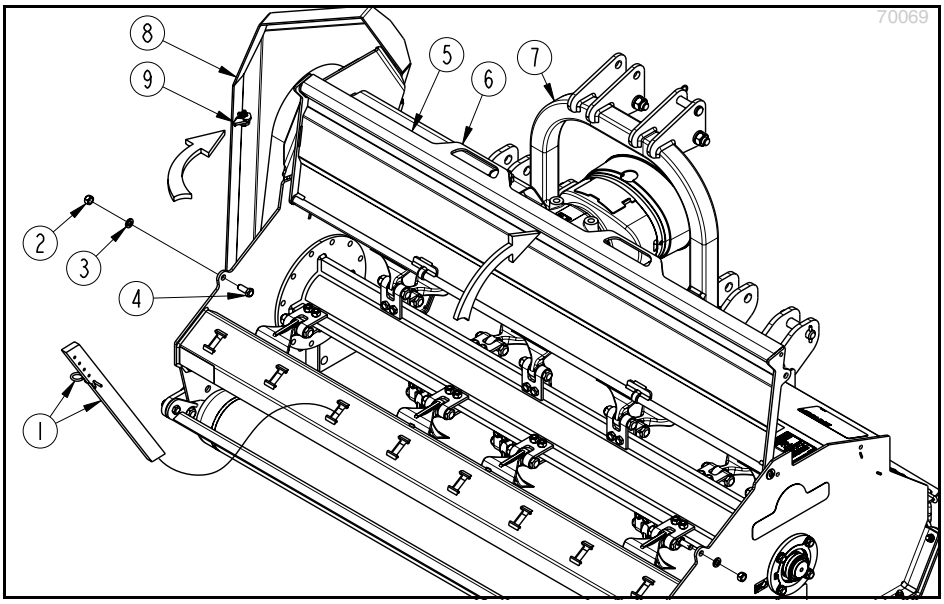

Rear Rotor Access Door
Figure 4-2

Rear Rotor Access Door

Refer to Figure 4-2:

DANGER

To avoid serious injury or death:

Never operate Flail Mower without rear rotor access door secured in the closed position. The power take-off must be disengaged, tractor engine turned off, and switch key removed before opening the door. Always secure door shut before starting tractor.

Open Rear Door

Open rear door (#5) to access rotor, blades, and to clean out plugged trash.

1. Shut tractor down properly before dismounting. Refer to **"Tractor Shutdown Procedure"** on page 14.
2. Remove all optional rake teeth (#1) from the rear.
3. Remove hex nuts (#2), lock washers (#3), and hex head bolts (#4) from both ends of the mower.
4. Open belt guard (#8) to remove interference with latch (#9) while opening rear access door (#5).
5. Rotate rear access door (#5) up as shown.
6. Secure rear door (#5) in the up position by tying cover handle (#6) to hitch frame (#7) with rope, bungee cord, or similar material.

Close Rear Door

1. Remove cord from door handle (#6) and lower door (#5) down slowly until it is closed.
2. Close belt guard (#7). Make sure latch (#6) is caught on the belt guard back plate.
3. Secure rear access door (#5) with 1/2"-13 x 1 1/4" GR5 hex head bolts (#4), lock washers (#3), and hex nuts (#2). Tighten hex nuts to the correct torque.
4. Remove cord from hitch frame (#7) to keep it from become tangled in the driveline.
5. If removed, replace optional rake teeth (#1).

Rotor Blade Replacement

IMPORTANT: Do not mix used blades with new blades, mix used mounting hardware with new mounting hardware, or sharpen blades. Doing any of the above can cause the rotor to be out-of-balance and damage bearings, rotor, and other components.

IMPORTANT: There are three optional rotors. Each rotor assembly is designed and balanced to receive one specific style of blade. Be sure to replace components on the rotor assembly with original Land Pride parts.

IMPORTANT: Should one of the other blade styles be desired, an optional rotor assembly complete with blades is available. Have your dealer order and change out the rotor assembly.

Frequently check rotor blades to make sure they are in good working condition and properly secured to the rotor. Replace all blades when one or more blades become damaged or excessively worn.

Determine type of blade the Flail Mower is equipped with and corresponding blade replacement instructions below. Refer to:

- **"Rotor With Ducksfoot Blades"** on page 32
- **"Rotor With Heavy-Duty Y Blades"** on page 33.
- **"Rotor With Hammer Blades"** on page 34

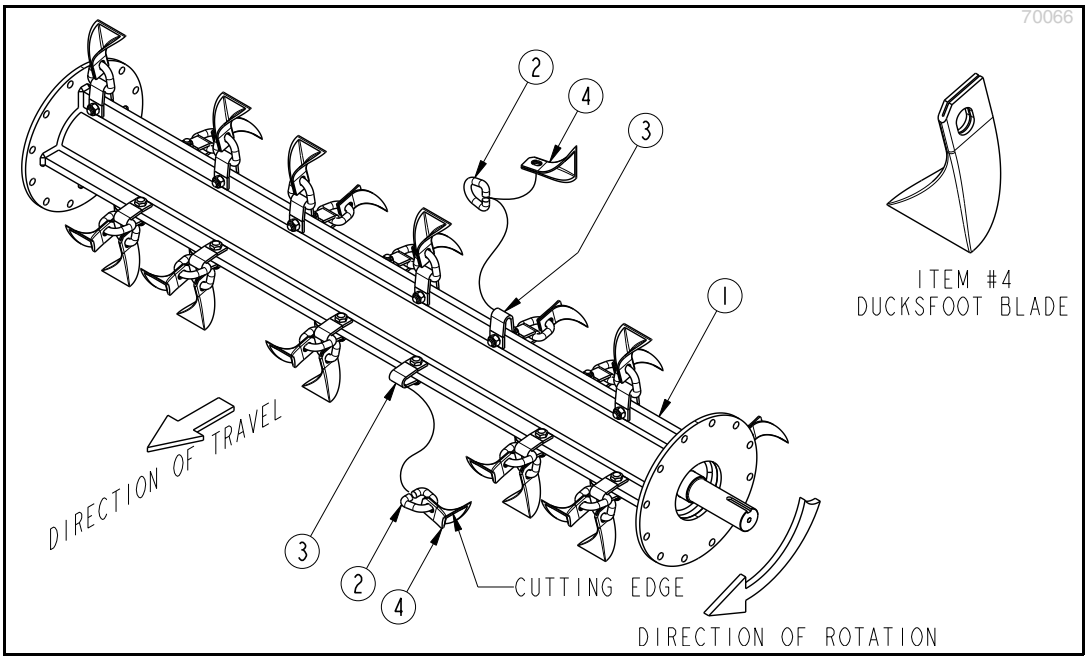

Rotor Assembly With Duck Blades
Figure 4-3

Rotor With Ducksfoot Blades

Refer to Figure 4-3:

Item	Pt. No.	Description	Qty
1	333-038A	FM2548 Rotor Duck Blade Assembly	1
1	333-039A	FM2560 Rotor Duck Blade Assembly	1
1	333-040A	FM2572 Rotor Duck Blade Assembly	1
1	333-041A	FM2584 Rotor Duck Blade Assembly	1
2	891-444C	FM D-Ring 1/2" Wire	48" = 20
			60" = 24
			72" = 28
			84" = 32
3	891-471C	U-Bar Hanger	48" = 20
			60" = 24
			72" = 28
			84" = 32
4	891-472C	Ducksfoot Blade	48" = 20
			60" = 24
			72" = 28
			84" = 32

NOTE: To help avoid installing blades backward, remove and install one ducksfoot blade at a time.

1. Shut tractor down properly before dismounting. Refer to **"Tractor Shutdown Procedure"** on page 14.
2. Open rear access door. Refer to**"Rear Rotor Access Door"** on page 31.
3. Rotate D-ring (#2) 90° as shown and remove from U-bar (#3).
4. Slide ducksfoot blade (#4) off of D-ring (#2).
5. Slide new ducksfoot blade (#4) onto D-ring (#2).
6. Rotate D-ring (#2) until cutting edge of ducksfoot blade (#4) is leading in the direction of rotor rotation.
7. Slide D-ring (#2) onto U-bar (#3) and rotate D-ring 90° to lock it in place.
8. Repeat steps 3-7 until all ducksfoot blades are installed.
9. Inspect all ducksfoot blades (#4) to verify the cutting edge is leading in the direction of rotation.
10. When finished, close rear door and secure it shut with removed hardware. Refer to**"Rear Rotor Access Door"** on page 31.

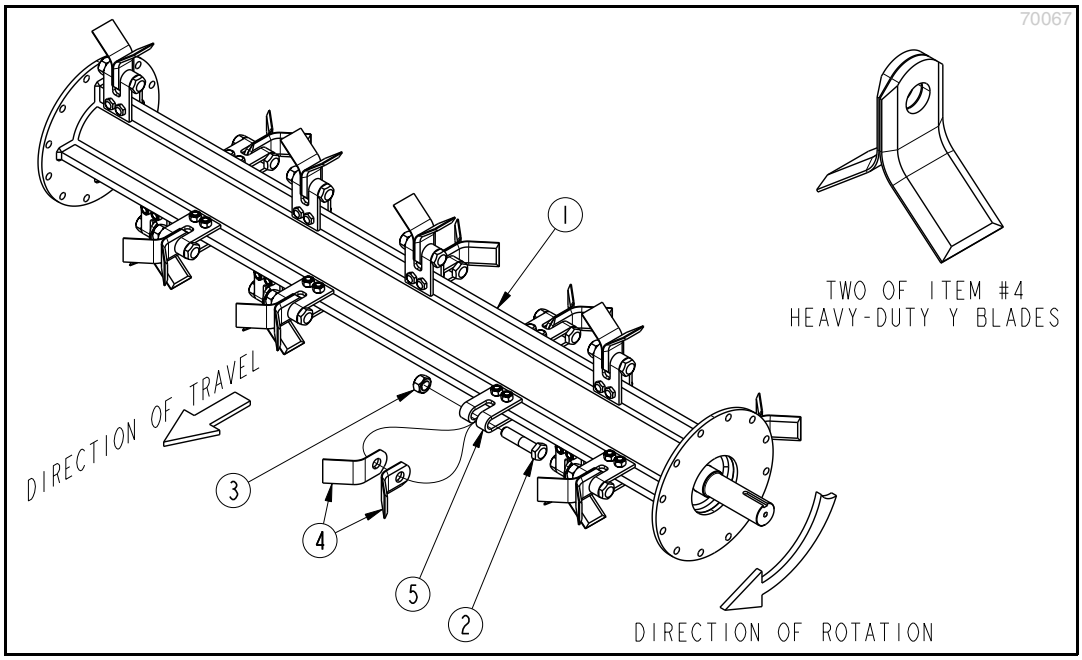

Rotor Assembly With Heavy-Duty Y Blades
Figure 4-4

Rotor With Heavy-Duty Y Blades

Refer to Figure 4-4:

Item	Pt. No.	Description	Qty
1	333-080A	FM2548 Rotor Heavy-Y Blade Assembly	1
1	333-081A	FM2560 Rotor Heavy-Y Blade Assembly	1
1	333-082A	FM2572 Rotor Heavy-Y Blade Assembly	1
1	333-083A	FM2584 Rotor Heavy-Y Blade Assembly	1
2	802-160C	Hex Head Cap Screw	48" = 12
		5/8"-11 x 3 1/4" GR5	60" = 16
			72" = 20
			84" = 24
3	803-271C	Nut, Hex Top Lock	48" = 12
		5/8"-11 PLT	60" = 16
			72" = 20
			84" = 24
4	891-469C	Heavy-Duty Y Blade	48" = 24
			60" = 32
			72" = 40
			84" = 48
5	891-470C	U-Bar Hanger - Heavy Y Blade	48" = 12
			60" = 16
			72" = 20
			84" = 24

The heavy-duty Y blades have a cutting edge on both the leading and trailing edges. When the leading edge wears out, turn existing pair of blades around 180 degrees and reinstall with new top locknuts.

1. Shut tractor down properly before dismounting. Refer to **"Tractor Shutdown Procedure"** on page 14.
2. Open rear access door. Refer to**"Rear Rotor Access Door"** on page 31.

> **IMPORTANT:** Locknuts lose their ability to lock once removed. Always replace removed locknuts with new locknuts.

3. Remove top locknut (#3) and bolt (#2).
4. Remove existing heavy-duty Y blades (#4) or turn existing pair of blades around 180 degrees and reinstall.
5. Install heavy-duty Y blades (#4) with existing 3/4"-10 x 3 1/4" GR8 hex head bolt (#2) and new top locknut (#3).
6. Tighten top locknut to the correct torque.
7. Repeat steps 3-6 until all heavy-duty Y blades are inverted or replaced with new blades.
8. When finished, close rear door and secure it shut with removed hardware. Refer to**"Rear Rotor Access Door"** on page 31.

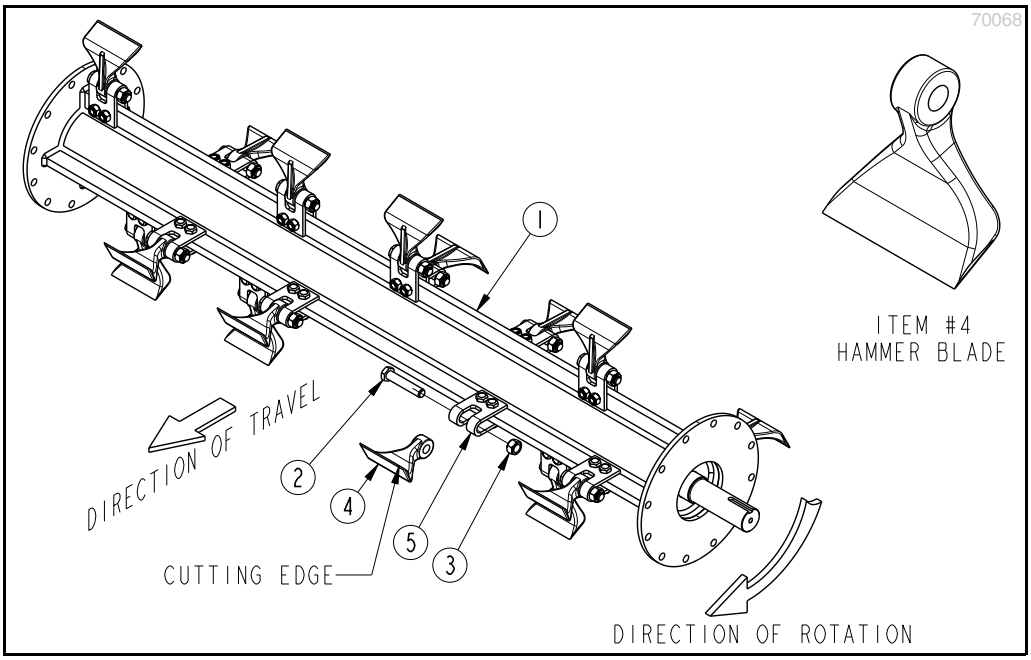

Rotor Assembly With Hammer Blades
Figure 4-5

Rotor With Hammer Blades

Refer to Figure 4-5:

Item	Pt. No.	Description	Qty
1	333-134A	FM2548 Rotor Hammer Blade Assembly	1
1	333-135A	FM2560 Rotor Hammer Blade Assembly	1
1	333-136A	FM2572 Rotor Hammer Blade Assembly	1
1	333-137A	FM2584 Rotor Hammer Blade Assembly	1
2	802-160C	Hex Head Cap Screw	48" = 12
		5/8"-11 x 3 1/4" GR5	60" = 16
			72" = 20
			84" = 24
3	803-271C	Nut, Hex Top Lock	48" = 12
		5/8"-11 PLT	60" = 16
			72" = 20
			84" = 24
4	891-469C	Hammer Blade	48" = 12
			60" = 16
			72" = 20
			84" = 24
5	891-502C	U-Bar Hanger - Hammer Blade	48" = 12
			60" = 16
			72" = 20
			84" = 24

1. Shut tractor down properly before dismounting. Refer to **"Tractor Shutdown Procedure"** on page 14.
2. Open rear access door. Refer to**"Rear Rotor Access Door"** on page 31.

> **IMPORTANT:** Locknuts lose their ability to lock once removed. Always replace removed locknuts with new locknuts.

3. Remove top locknut (#3) and bolt (#2).
4. Remove existing hammer blade (#4).
5. Install new hammer blade (#4) with existing 5/8"-11 x 3 1/4" GR5 hex head bolt (#2) and new top locknut (#3).
6. Tighten top locknut to the correct torque.
7. Repeat steps 3-6 until all hammer blades are replaced with new blades.
8. When finished, close rear door and secure it shut with removed hardware. Refer to**"Rear Rotor Access Door"** on page 31.

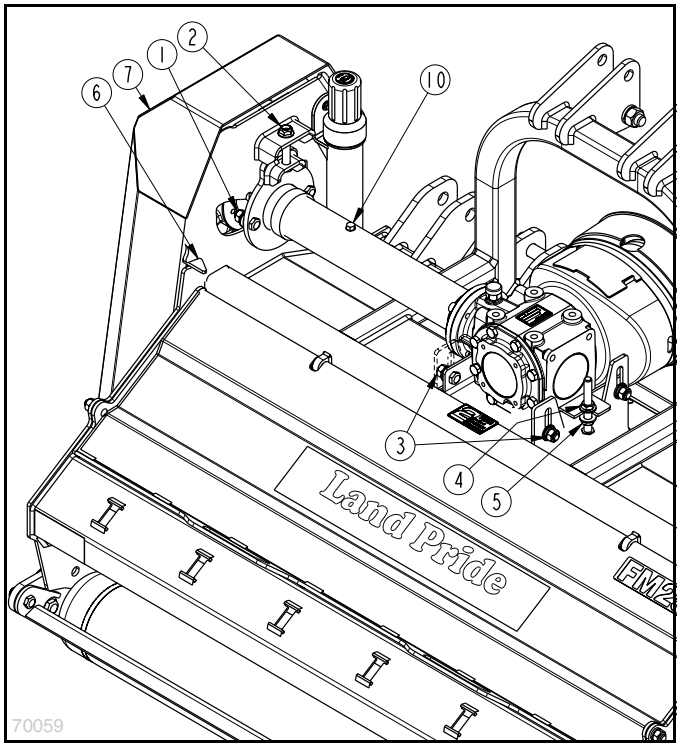

FM2548 Drive Belt Replacement
Figure 4-6

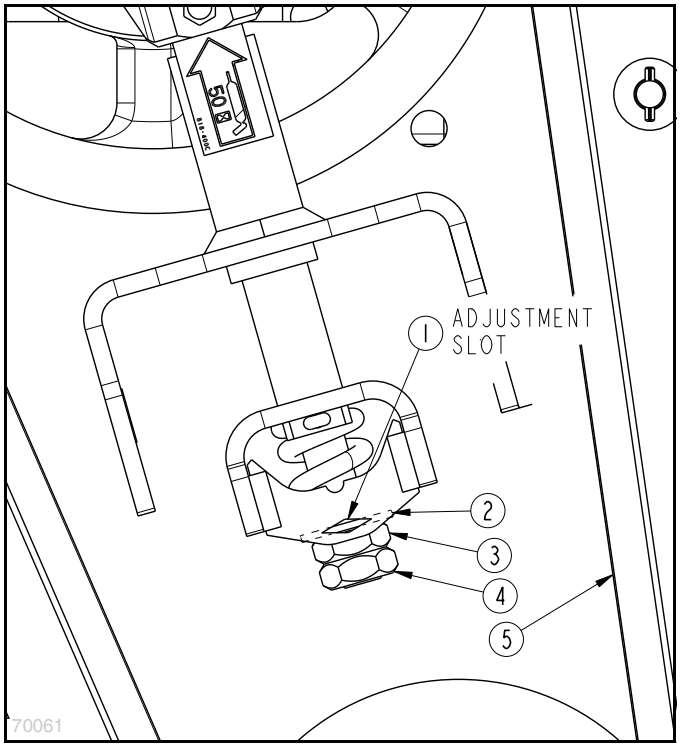

FM2560, FM2572, & FM2584 Drive Belt Replacement
Figure 4-7

Replace Drive Belt (FM2548)

Refer to Figure 4-6:

The gearbox and drive pulley must be adjusted equal amounts to keep drive pulley in line and parallel with driven pulley.

> **IMPORTANT:** Belt tension should be rechecked on new belts after approximately 20 hours of operation.

1. Shut tractor down properly before dismounting. Refer to **"Tractor Shutdown Procedure"** on page 14.
2. Pull back on latch (#6) and open belt guard (#7).
3. Loosen two hex nuts (#1) located inside belt guard (#7) and four hex nuts (#3) located on both sides of the gearbox.
4. Loosen upper nut (#4) 3 or more full turns.
5. Adjust drive pulley down with hex flange lock nut (#2) and lower nut (#5). Count number of turns nuts (#2 & #5) make while adjusting drive pulley down. They should both be adjusted down an equal number of turns.
6. Remove existing drive belt from pulleys and install new drive belt.
7. Adjust drive belt to the proper tension. Refer to **"Tension FM2548 Drive Belt"** on page 24**.**
8. Close belt guard (#7). Make sure latch (#6) is caught on the belt guard back plate.

Replace Drive Belt (FM2560/72/84)

Refer to Figure 4-7:

> **IMPORTANT:** Belt tension should be rechecked on new belts after approximately 20 hours of operation.

1. Shut tractor down properly before dismounting. Refer to **"Tractor Shutdown Procedure"** on page 14.
2. **Refer to Figure 4-6:** Pull back on latch (#6) and open belt guard (#7).

Refer to Figure 4-7:

3. Loosening jam nut (#4) and hex nut (#3) until the drive belt (#5) can be removed.
4. Remove existing drive belt (#5) from pulleys and install new drive belt.
5. Adjust belt (#5) to the proper tension. Refer to **"Tension FM2560/72/84 Drive Belt"** on page 25**.**
6. **Refer to Figure 4-6:** Close belt guard (#7). Make sure latch (#6) is caught on the belt guard back plate.

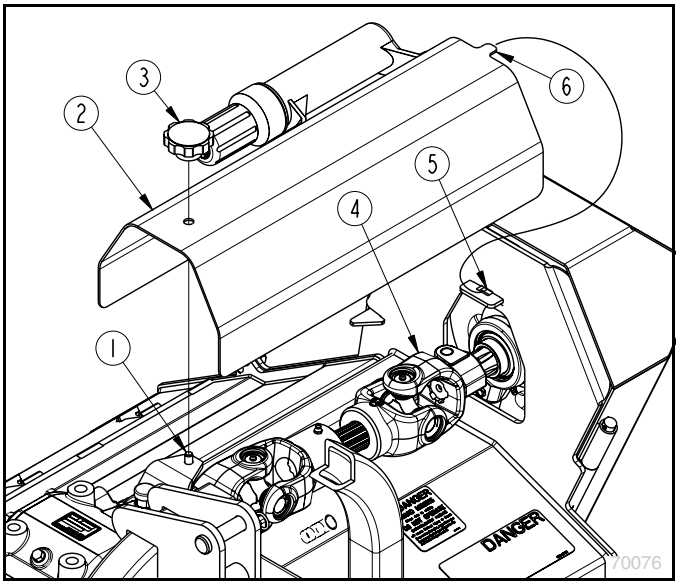

Access Driveline Zerks on FM2560, FM2572, & FM2584
Figure 4-8

Access Intermediate Driveline Zerks

Refer to Figure 4-8:

The intermediate driveline is provided on FM2560, FM2572, and FM2584 Flail Mowers only. The Drive pulley for the FM2548 Flail Mower mounts directly to the gearbox output shaft.

1. Unscrew hand knob (#3). Remove driveline cover (#2) from stud (#1) and slot (#5).
2. Lubricate driveline (#4) as needed. Refer to **"Intermediate Driveline"** on page 38 for detailed instructions.
3. Insert cover tab (#6) in slot (#5) and opposite end of driveline cover (#2) over stud (#1).
4. Secure driveline cover (#2) with hand knob (#3). Tighten hand knob until tight.

Long-Term Storage

Clean, inspect, service, and make necessary repairs to the implement when storing it for long periods and at the end of the season. This will help to ensure the unit is ready for field use the next time you hook-up to it.

DANGER

To avoid serious injury or death:

Always secure equipment with solid, non-concrete supports before working under it. Never go under equipment supported by concrete blocks or hydraulics. Concrete can break, hydraulic lines can burst, and/or hydraulic controls can be actuated even when power to hydraulics is off.

1. Remove any dirt and grease that may have accumulated on the mower and moving parts. Scrape off compacted dirt from under the hood and then wash the surface thoroughly with a garden hose.
2. Check rotor, blades, blade mounts, and blade bolts for wear and replace if necessary. See **"Rotor Blade Replacement"** on page 31.
3. Inspect mower for loose, damaged, or worn parts and adjust or replace as needed.
4. Repaint parts where paint is worn or scratched to prevent rust. Ask your Land Pride dealer for aerosol touch-up paint. Paint is also available in touch-up bottles with brush, quarts, and gallon sizes by adding TU, QT, or GL to the end of the aerosol part number.

Land Pride Touch-up Paint

Part No.	Part Description
821-066C	PAINT ORANGE SPRAY CAN
821-070C	PAINT GP GLOSS BLACK SPRAY CAN

5. Replace all damaged or missing decals.
6. A light coat of oil or grease may also be applied to areas where paint has worn off to minimize oxidation.
7. Lubricate as noted under **"Lubrication Points"** on page 37.
8. Store mower on a level surface in a clean, dry place. Inside storage will reduce maintenance and make for a longer mower life. Lower unit onto a flat surface to a suitable 3-point height. Ensure that the main frame is stable.
9. Store driveline yoke off the ground.

Lubrication Points

Lubrication Legend


Multi-purpose spray lube


Multi-purpose grease lube


Multi-purpose oil lube

Intervals in hours at which lubrication is required

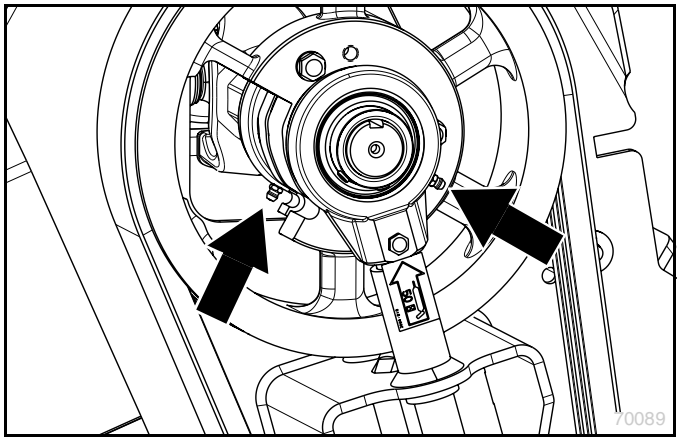

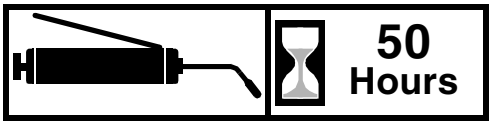

Hanger Bearings

FM2560, FM2572, & FM2584 only

2 - Zerks
Type of Lubrication: Multi-purpose Grease
Quantity: As required

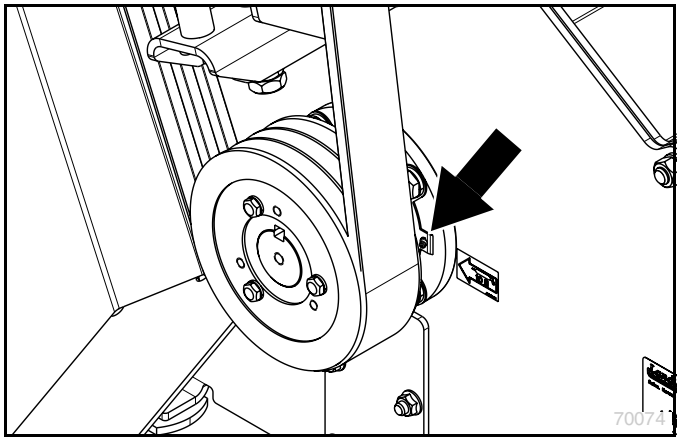

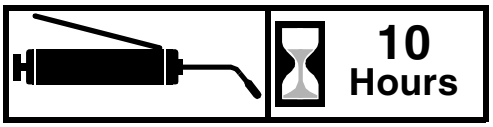

Rotor Bearings

2- Zerks (1 on each end of rotor)
Type of Lubrication: Multi-purpose Grease
Quantity: As required

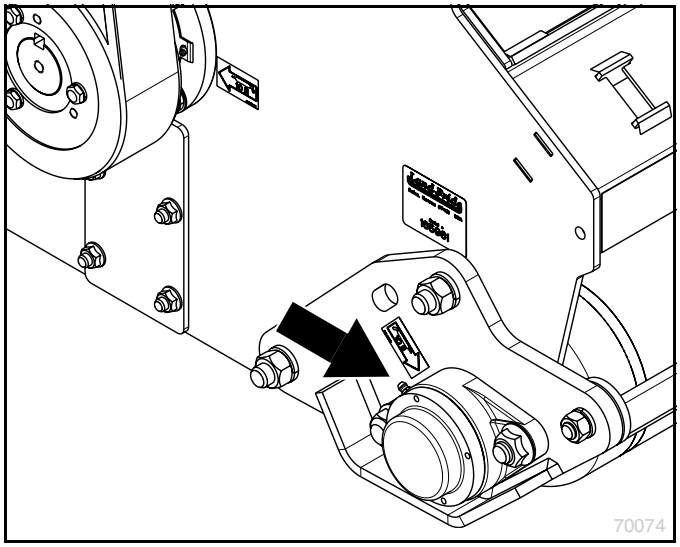

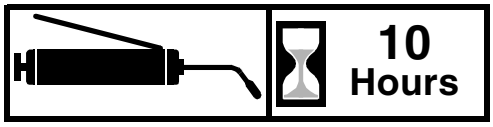

Rear Roller Bearings

2- Zerks (1 on each end of rear roller)
Type of Lubrication: Multi-purpose Grease
Quantity: As required

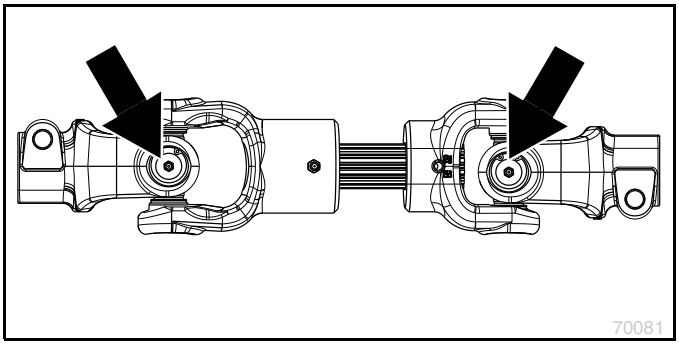

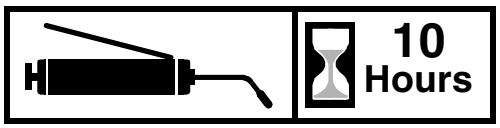

Intermediate Driveline

FM2560, FM2572, & FM2584 only

2- Zerks
Type of Lubrication: Multi-purpose Grease
Quantity: As required

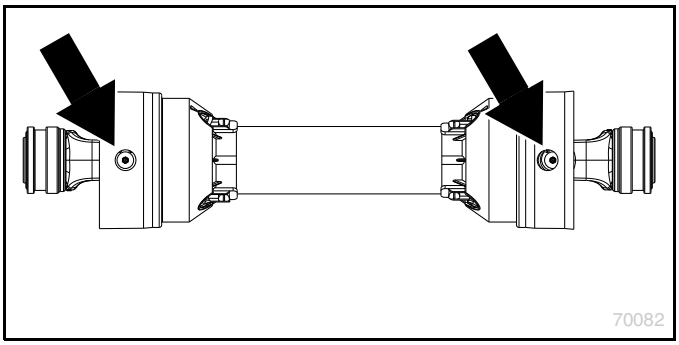

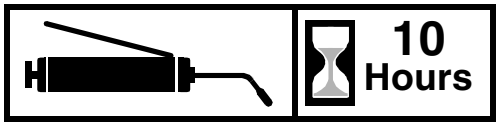

Main Driveline

2- Zerks
Type of Lubrication: Multi-purpose Grease
Quantity: As required

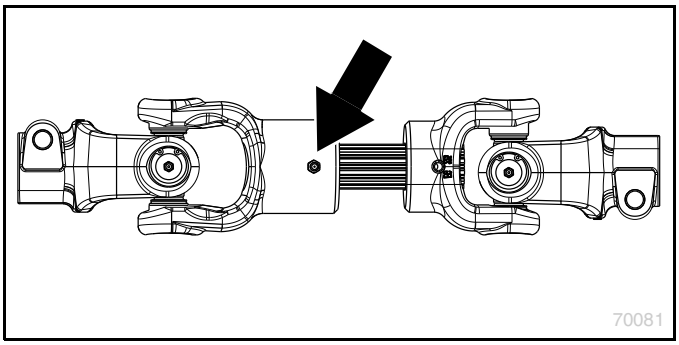

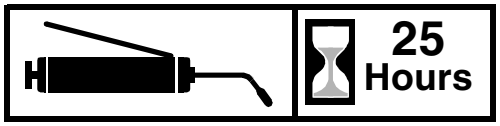

Intermediate Driveline Profile

FM2560, FM2572, & FM2584 only

1- Zerk
Type of Lubrication: Multi-purpose Grease
Quantity: As required

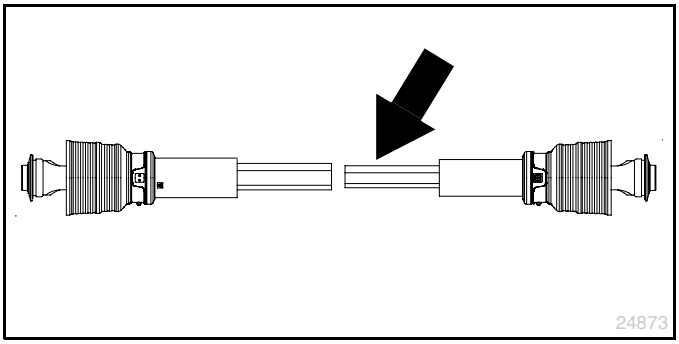

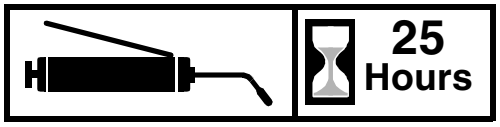

Main Driveline Profile

Type of Lubrication: Multi-purpose Grease

Quantity - Clean and coat inner profile tube of driveline with a light film of grease and then reassemble.

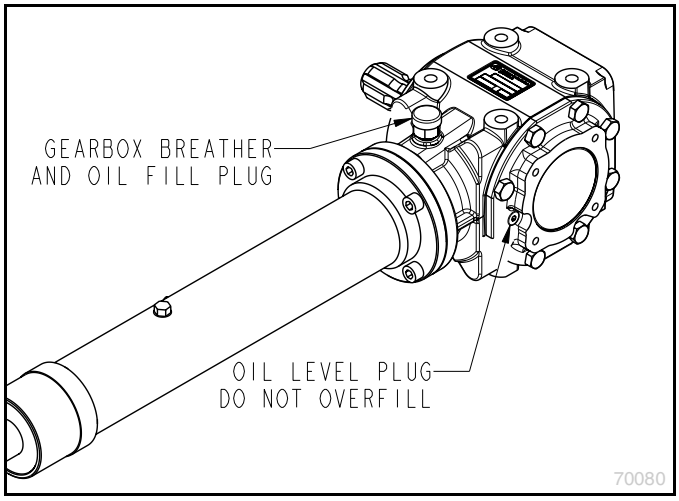

Gearbox Lubrication

FM2548 only

> **IMPORTANT:** The mower should be level when checking oil in gearbox**!**

Type of Lubrication: SAE EP 90W Gear Lube

Check oil level in gearbox by removing oil level plug. Oil should be level with bottom of plug hole. If needed, remove oil fill plug and add oil through oil fill hole until oil flows from oil level plug hole. Reinstall both plugs and tighten. **Do not overfill!**

Should your gearbox require service, take it to your nearest Land Pride dealer.

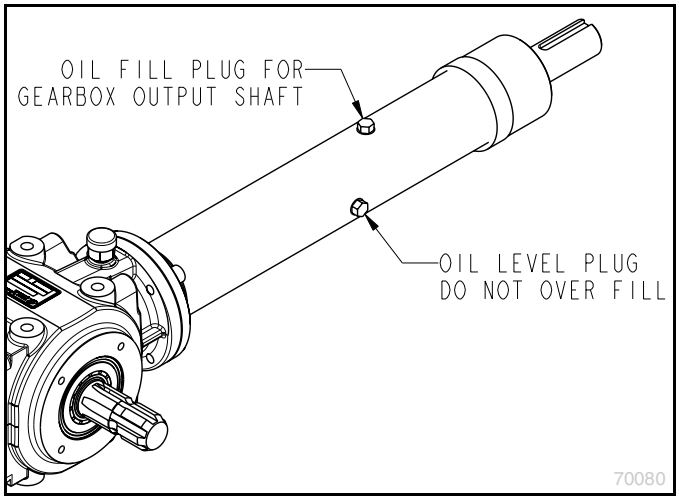

Gearbox Output Shaft Lubrication

FM2548 only

> **IMPORTANT:** The mower should be level when checking oil in the output shaft**!**

Type of Lubrication: SAE EP 90W Gear Lube

Check oil level in output shaft by removing oil level plug. Oil should be level with bottom of plug hole. If needed, remove oil fill plug and add oil through oil fill hole until oil flows from oil level plug hole. Reinstall both plugs and tighten. **Do not overfill!**

Should your gearbox output shaft require service, take it to your nearest Land Pride dealer.

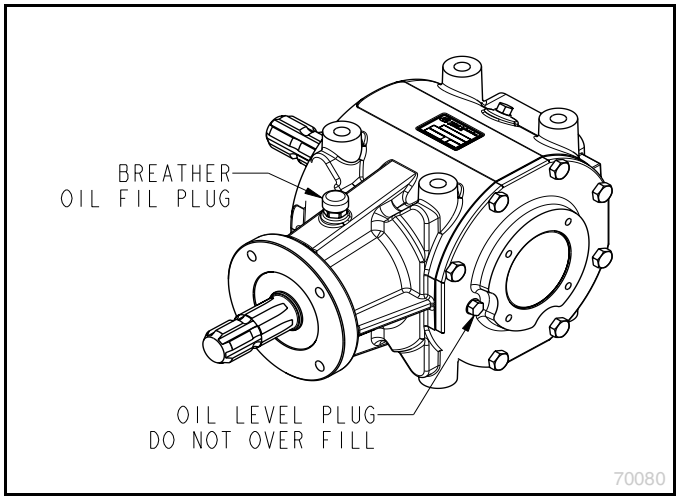

Gearbox Lubrication

FM2560, FM2572, & FM2584 only

> **IMPORTANT:** The mower should be level when checking oil in gearbox**!**

Type of Lubrication: SAE EP 90W Gear Lube

Check oil level in gearbox by removing oil level plug. Oil should be level with bottom of plug hole. If needed, remove oil fill plug and add oil through oil fill hole until oil flows from oil level plug hole. Reinstall both plugs and tighten. **Do not overfill!**

Should your gearbox require service, take it to your nearest Land Pride dealer.

FM25 Series Flail Mowers

Specifications & Capacities					
	Units	**FM2548**	**FM2560**	**FM2572**	**FM2584**
Weight of Standard unit with optional ducksfoot rotor	lbs (kg)	780 (353.8)	965 (437.7)	1040 (471.7)	1236 (560.6)
Weight of optional rotors: **Rotor with ducksfoot blades** **Rotor with heavy-duty Y blades** **Rotor with hammer blades**	lbs (kg)	**Blades / weight** 20 ea / 161(73) 24 ea / 177(80.3) 12 ea / 182(82.6)	**Blades / weight** 24 ea / 191(86.6) 32 ea / 215(97.5) 16 ea / 222(100.7)	**Blades / weight** 28 ea / 221(100.2) 40 ea / 535(242.7) 20 ea / 261(118.4)	**Blades / weight** 32 ea / 250(113.4) 48 ea / 292(132.4) 24 ea / 301(136.5)
Optional brush rake assembly	lbs (kg)	34 (15.4)	45 (20.4)	53 (24)	62 (28.1)
Working width	inch (m)	48 (1.22)	60 (1.52)	72 (1.83)	84 (2.13)
Overall width	inch (m)	60 (1.52)	72 (1.83)	84 (2.13)	96 (2.44)
Drive cover height	inch (cm)	33 (83.8)			
Rotor rpm		2450			
Hitch		Cat. I		Cat. I & II	
Gearbox rating	hp (kW)	80 (59.7)			
Driveline		Cat. 4			
Offset hitch	inch (cm)	Center or 8 (20.3) Right		Center or 10 (25.4) Right	
Blade tip speed	fpm (mps)	12,046 (61.2)			
Blade attachment		D-ring for ducksfoot blades, C-clamp for heavy-duty Y and hammer blades			
Rotor bearings		Spherical roller bearing			
Brush rakes (standard)		8	8	9	11
Rotor diameter	inch (cm)	5 (12.7) With reinforcing bars			
Rotor rotation		Reverse			
Cutting height	inch (cm)	0"- 6" (0- 15.2)			
Cutting capacity	inch (cm)	Ducksfoot: 1 (2.54) Heavy-duty Y blades: 1.5 (3.81) Hammer blades: 2 (5)			
Rear roller diameter	inch (cm)	5.56 (14.1)			
Hood/deck thickness	Ga (mm)	10 Ga (3.4)			

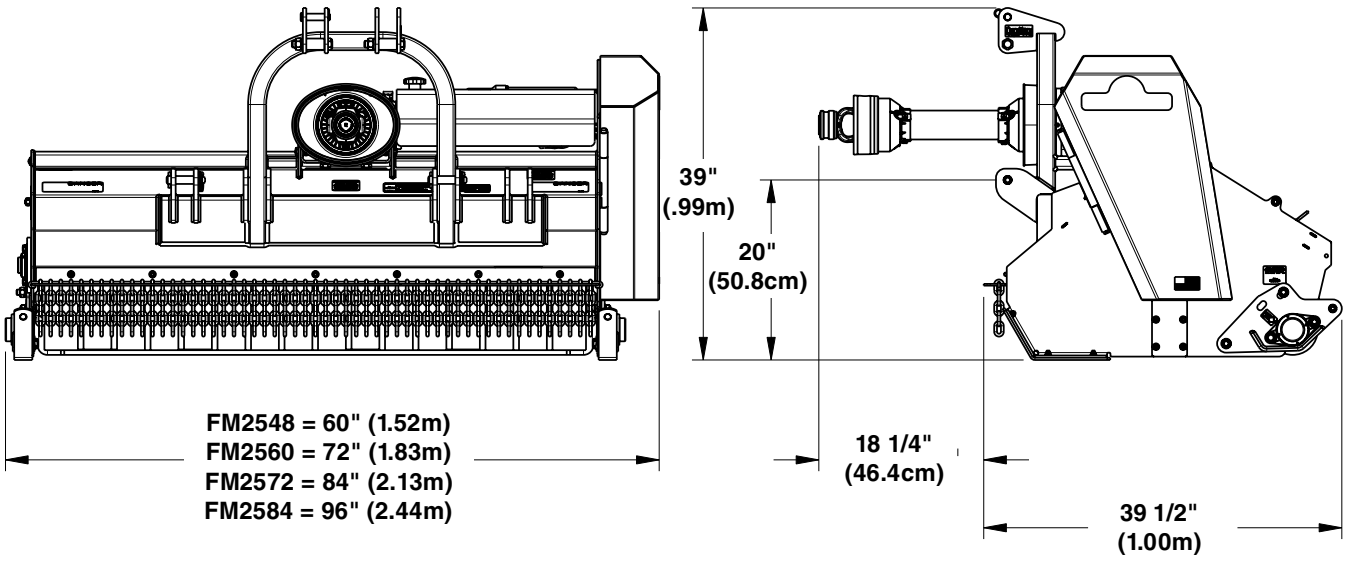

FM25 Series Flail Mowers

Features	Benefits
48", 60", 72", & 84" Cutting widths (122, 152, 183, 213 cm)	Wide selection of cutting widths to meet specific applications.
30-80 hp tractor	Fits a large array of tractors to meet the needs of consumers, municipalities, and landscapers.
Spring-loaded, self-indicating, belt-tensioning system (FM2560-FM2584)	Available on 60", 72", and 84" (152, 183, 213cm) models. Belt tensioner system brings the belt to proper tension by turning a jam nut. Makes maintaining proper belt tension easy, and increases belt life.
0"- 6" (0 - 15.2 cm) Cutting height	Variable cutting height allows operators to scalp the ground, or leave a 1" (2.54cm) to 6" (15.2cm) cut.
1", 1 1/2", & 2" (2.54, 3.81, & 5 cm) Blade cutting capacity	Ducksfoot blade can cut up to 1" (2.54cm) small brush. Heavy-duty Y blade can cut up to 1 1/2" (3.81cm) brush. Hammer blade can cut up to 2" (5cm) small saplings.
Sealed heavy-duty tapered roller rotor bearings	Sealed for protection from dust and debris. Withstand shock loads and deflection from heavy use.
Reverse rotor rotation	Brings the cut material up and over which allows it to be dispersed more evenly. Allows material to be shredded completely.
High knife tip speed	Knife tip speed 12,046 fpm (61.2 mps) provides a clean cut, creates a vacuum effect when using hammer or ducksfoot blades, and slices through saplings with great force when using heavy-duty Y blades.
Full width rear access door	Allows for easy access to blades and rotor for replacing blades and cleaning out debris.
Quick-change D-ring blade system	Replace ducksfoot blades without any tools.
3- "5V" Section Powerband Belt	Powerband belt distributes load evenly, which prevents the belts from jumping off the drive when a shock load occurs.
Hitch offset: 8" (20.3cm) for FM2548-60 10" (25.4cm) for FM2572-84	The two position hitch allows the mower to be offset to the right for a closer cut alongside buildings, fences, and roadsides.
Three blade options: ducksfoot, hammer, heavy-duty Y	Three blade options to meet specific applications.
Accessible rotor	Rotor can be removed by unbolting cover plates and bearings.
Grease zerks on end caps of driveline cross journals	Intermediate and main driveline cross journals are easier to grease.
Standard removable roller scraper mounted with only two bolts	Keeps roller clean for consistent cutting height in wet conditions. Two bolt mounting makes it easy to remove to allow heavy dry cuttings flow freely over the roller.
Front safety chains	Protects operator and bystanders from debris.
Replaceable skid shoes	Prevents wear on end panels from ground contact.

Torque Values Chart for Common Bolt Sizes

Bolt Size (inches)	Bolt Head Identification: Grade 2		Grade 5		Grade 8	
in-tpi [1]	N · m [2]	ft-lb [3]	N · m	ft-lb	N · m	ft-lb
1/4" - 20	7.4	5.6	11	8	16	12
1/4" - 28	8.5	6	13	10	18	14
5/16" - 18	15	11	24	17	33	25
5/16" - 24	17	13	26	19	37	27
3/8" - 16	27	20	42	31	59	44
3/8" - 24	31	22	47	35	67	49
7/16" - 14	43	32	67	49	95	70
7/16" - 20	49	36	75	55	105	78
1/2" - 13	66	49	105	76	145	105
1/2" - 20	75	55	115	85	165	120
9/16" - 12	95	70	150	110	210	155
9/16" - 18	105	79	165	120	235	170
5/8" - 11	130	97	205	150	285	210
5/8" - 18	150	110	230	170	325	240
3/4" - 10	235	170	360	265	510	375
3/4" - 16	260	190	405	295	570	420
7/8" - 9	225	165	585	430	820	605
7/8" - 14	250	185	640	475	905	670
1" - 8	340	250	875	645	1230	910
1" - 12	370	275	955	705	1350	995
1-1/8" - 7	480	355	1080	795	1750	1290
1-1/8" - 12	540	395	1210	890	1960	1440
1-1/4" - 7	680	500	1520	1120	2460	1820
1-1/4" - 12	750	555	1680	1240	2730	2010
1-3/8" - 6	890	655	1990	1470	3230	2380
1-3/8" - 12	1010	745	2270	1670	3680	2710
1-1/2" - 6	1180	870	2640	1950	4290	3160
1-1/2" - 12	1330	980	2970	1950	4820	3560

Bolt Size (Metric)	Bolt Head Identification: Class 5.8		Class 8.8		Class 10.9	
mm x pitch [4]	N · m	ft-lb	N · m	ft-lb	N · m	ft-lb
M 5 X 0.8	4	3	6	5	9	7
M 6 X 1	7	5	11	8	15	11
M 8 X 1.25	17	12	26	19	36	27
M 8 X 1	18	13	28	21	39	29
M10 X 1.5	33	24	52	39	72	53
M10 X 0.75	39	29	61	45	85	62
M12 X 1.75	58	42	91	67	125	93
M12 X 1.5	60	44	95	70	130	97
M12 X 1	90	66	105	77	145	105
M14 X 2	92	68	145	105	200	150
M14 X 1.5	99	73	155	115	215	160
M16 X 2	145	105	225	165	315	230
M16 X 1.5	155	115	240	180	335	245
M18 X 2.5	195	145	310	230	405	300
M18 X 1.5	220	165	350	260	485	355
M20 X 2.5	280	205	440	325	610	450
M20 X 1.5	310	230	650	480	900	665
M24 X 3	480	355	760	560	1050	780
M24 X 2	525	390	830	610	1150	845
M30 X 3.5	960	705	1510	1120	2100	1550
M30 X 2	1060	785	1680	1240	2320	1710
M36 X 3.5	1730	1270	2650	1950	3660	2700
M36 X 2	1880	1380	2960	2190	4100	3220

[1] in-tpi = nominal thread diameter in inches-threads per inch

[2] N· m = newton-meters

[3] ft-lb= foot pounds

[4] mm x pitch = nominal thread diameter in millimeters x thread pitch

Torque tolerance + 0%, -15% of torquing values. Unless otherwise specified use torque values listed above.
All locknuts or lubricated fasteners: Use 75% of torque value. (i.e. 1/2"-13 GR5 = 76 ft-lb; 75% of 76 or .75 x 76 = 57 ft-lb)

Warranty

Land Pride warrants to the original purchaser that this Land Pride product will be free from defects in material and workmanship beginning on the date of purchase by the end user according to the following schedule when used as intended and under normal service and conditions for personal use.

Overall Unit and Driveline: One year Parts and Labor

Gearbox: Two years on all components.

Blades and Belts: Considered wear items.

This Warranty is limited to the repair or replacement of any defective part by Land Pride and the installation by the dealer of any such replacement part, and does not cover common wear items. Land Pride reserves the right to inspect any equipment or parts which are claimed to have been defective in material or workmanship.

This Warranty does not apply to any part or product which in Land Pride's judgment shall have been misused or damaged by accident or lack of normal maintenance or care, or which has been repaired or altered in a way which adversely affects its performance or reliability, or which has been used for a purpose for which the product is not designed. Misuse also specifically includes failure to properly maintain oil levels, grease points, and driveline shafts.

Claims under this Warranty should be made to the dealer which originally sold the product and all warranty adjustments must be made through an authorized Land Pride dealer. Land Pride reserves the right to make changes in materials or design of the product at any time without notice.

This Warranty shall not be interpreted to render Land Pride liable for damages of any kind, direct, consequential, or contingent to property. Furthermore, Land Pride shall not be liable for damages resulting from any cause beyond its reasonable control. This Warranty does not extend to loss of crops, any expense or loss for labor, supplies, rental machinery or for any other reason.

No other warranty of any kind whatsoever, express or implied, is made with respect to this sale; and all implied warranties of merchantability and fitness for a particular purpose which exceed the obligations set forth in this written warranty are hereby disclaimed and excluded from this sale.

This Warranty is not valid unless registered with Land Pride within 30 days from the date of original purchase.

IMPORTANT: The Online Warranty Registration should be completed by the dealer at the time of purchase. This information is necessary to provide you with quality customer service.

Model Number _____ **Serial Number** _____

Corporate Office: P.O. Box 5060
Salina, Kansas 67402-5060 USA
www.landpride.com