All-Flex Mower

AFM4216

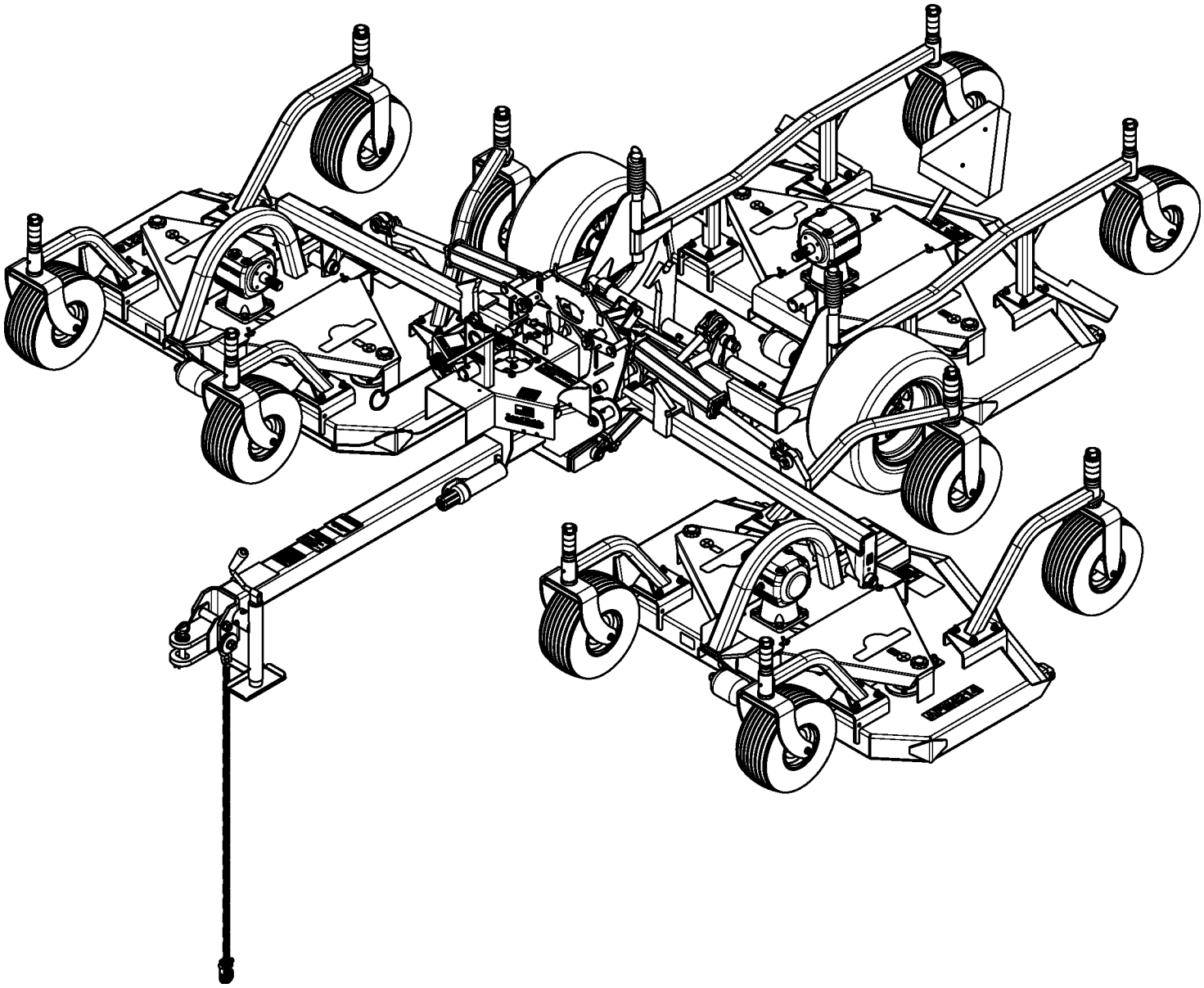

315-587P
Parts Manual

Read the Operator's Manual entirely. When you see this symbol, the subsequent instructions and warnings are serious - follow without exception. Your life and the lives of others depend on it!

© Copyright 2024 Printed 01/23/2024

Cover photo may show optional equipment not supplied with standard unit.

Table Of Contents

Section 1: Introduction **2**
- *Using This Manual* *2*
- *Manual Replacement Information* *2*
- *Manual Revisions* *2*
- *Touch-up Paint* *2*
- *Hardware Legend* *3*
- *Replacement Hardware* *3*
- *Serial Numbers* *3*
- *Part Number Service Coding* *3*

Section 2: Frame **4**
- *Center Deck Pivot* *4*
- *Frame* *6*
- *Pull Latch Cord Lock-Up* *8*
- *Right Hand and Left Deck Pivot* *10*
- *Tire and Hub* *12*

Section 3: Drivelines **14**
- *Driveline (826-371C) Comer* *14*
- *Driveline (826-371C) Eurocardan* *16*
- *Driveline Arrangement* *18*
- *Driveline (826-111C) Walterscheid* *20*
- *Driveline (826-143C) Walterscheid* *22*
- *Driveline (826-370C) Eurocardan* *24*
- *Driveline (826-842C) Weasler* *26*
- *Driveline Slip Clutch (053314) Walterscheid* *28*
- *Driveline Slip Clutch (1466607) Eurocardan* *30*
- *Driveline Slip Clutch (1466707) Eurocaran* *32*

Section 4: Decks **34**
- *Belt Drive Center and Right Hand Deck* *34*
- *Belt Drive Left Hand Deck* *38*
- *Channel Center Deck* *42*
- *Channel Left Hand Deck* *44*
- *Channel Right Hand Deck* *46*
- *Deck and Roller* *48*

Section 5: Light Kit & Gauge Wheels **50**
- *AFM Light Kit S/N 1522478-* *50*
- *AFM Light Kit S/N 1522479+* *52*
- *Gauge Wheel (15" Dia) Center Deck* *54*
- *Gauge Wheel (15" Dia.) Left & Right Deck S/N 923214-* *56*
- *Gauge Wheel (15" Dia.) Left & Right Deck S/N 923215+* *58*
- *Gauge Wheel (18" Dia.) Center Deck* *62*
- *Gauge Wheel (18" Dia.) Left & Right Deck S/N 923214-* *64*
- *Gauge Wheel (18" Dia.) Left & Right Deck S/N 923215+* *68*
- *Hub Assembly (815-104C)* *70*
- *Tire & Wheel 15 X 6-6NHS 4 PR (814-357C)* *72*
- *Tire & Wheel 18 X 9.50-8 (814-118C & 814-408C)* *74*

Section 6: Gear Boxes **76**
- *Gearbox (826-326C) Comer* *76*
- *Gearbox (826-274C) OMNI* *78*
- *Gearbox (826-274C) SD LLC* *80*
- *Gearbox (826-327C) Comer* *82*

Section 7: Hydraulics **84**
- *Hydraulic Cylinder (810-150C) Midway* *84*
- *Hydraulic Cylinder (810-150C) Cross* *86*
- *Hydraulic Cylinder (810-200C) Midway* *88*
- *Hydraulic Arrangement* *90*
- *Hydraulic Cylinder (810-150C) Red Lion* *92*
- *Hydraulic Cylinder (810-200C) Red Lion* *94*

Section 8: Options & Accessories **96**
- *Hydraulic Cylinder (801-555C) Midway* *96*
- *Hydraulic Wing Unlock (315-722A)* *98*
- *SMV Sign* *100*

Section 9: Decals **102**
- *Decal Placement Decks* *102*
- *Decal Placement Transport Frame* *104*
- *Land Pride Touch-up Paints* *106*

This Page Intentionally Left Blank

General Information

Using This Manual

This manual is divided into sections. The first section contains General Information. The remaining sections divide the machine into segments (i.e. Frames, Drives, Hydraulics, etc.) which illustrate and list all parts. A Parts Number Index is located at the back of the book.

The Land Pride parts in this manual are specially designed for this machine and should be replaced with Land Pride parts only.

The information in this manual is current at time of printing. Some parts may change to assure top performance.

Right-hand and left-hand as used in this manual are determined by facing the direction the machine will travel while in use.

Below is an example of two facing pages from a parts manual. Familiarize yourself with the type of information contained on these pages.

Manual Replacement Information

Replacement manuals are available. Refer to our website at www.landpride.com or e-mail us at lit@landpride.com for additional information. Our website continues to provide the most up-to-date manuals available.

Touch-up Paint

Repaint parts where paint is worn or scratched to prevent rust. Aerosol cans, quart cans, gallon cans and touch-up bottles with brush applicator are available through your local dealer.

Land Pride color descriptions and part numbers are listed on the “Land Pride Touch-up Paints” page in the “Decals” section of this book.

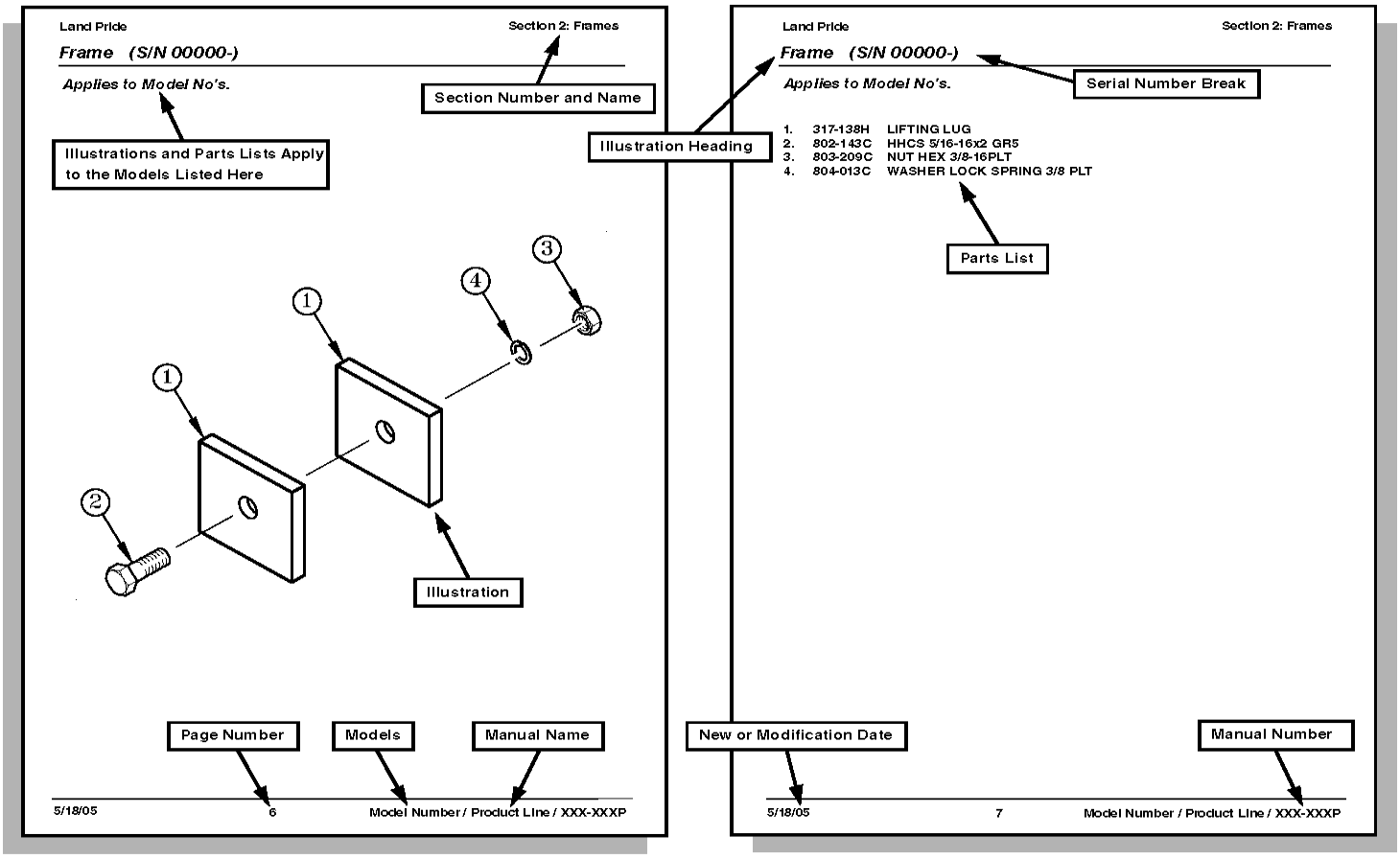

© Copyright 2023. All rights Reserved

Land Pride provides this publication “as is” without warranty of any kind, either expressed or implied. While every precaution has been taken in the preparation of this manual, Land Pride assumes no responsibility for errors or omissions. Neither is any liability assumed for damages resulting from the use of the information contained herein. Land Pride reserves the right to revise and improve its products as it sees fit. This publication describes the state of this product at the time of its publication, and may not reflect the product in the future. The illustrations in this manual are not intended for safe and proper assembly or disassembly of equipment. The illustrations are intended for ordering parts only.

Land Pride is a registered trademark.

All other brands and product names are trademarks or registered trademarks of their respective holders.

Printed in the United States of America.

Hardware Legend

AR	As Required
BLADE	Blade Bolt
C	Cap Screw
CP	Cotter Pin
CPHSSS	Cup Point Hex Socket Set Screw
CPSHSS	Cup Point Square Head Set Screw
CPSQHSS	Cup Point Square Head Set Screw
CRFCHMS3	Cross Recess Flat Countersunk Head Machine Screw
CRPHMS	Cross Recess Pan Head Machine Screw
CRPHTFS	Cross Recess Pan Head Thread Forming
CRRHMS	Cross Recess Round Head Machine Screw
CRTHMS	Cross Recess Truss Head Machine Screw
CSNB	Countersunk Square Neck Bolt
FHMS	Flat Head Machine Screw
FTC	Full Thread Cap Screw
H	Hex Nut
HCLN	Hex Center Lock Nut
HFLCS	Hex Flange Lock Cap Screw
HFS	Hex Flange Screw
HFSLN	Hex Flange Serrated Lock Nut
HFSS	Hex Flange Serrated Screw
HHCS	Hex Head Cap Screw or Metric Bolt
HSBHCS	Hex Socket Button Head Cap Screw
HSFCHCS	Hex Socket Flat Countersunk Head Cap Screw
HSHCS	Hex Socket Head Cap Screw
HSSS	Hex Socket Head Screw
HTLN	Hex Top Lock Nut
HWHCS	Hex Washer Head Cap Screw
HWHMS	Hex Washer Head Machine Screw
HXBHCS	Hex Socket Button Head Cap Screw
J	Hex Jam Nut
JIC	37 Degree Tapered Thread
L	Helical Spring Lock Washer
LUG	Lug Bolt
NFC	National Fine Cap Screw
NPSM	National Pipe Straight Mechanical
NPTF	National Pipe Taper Fuel
P	Wide Plain Washer
PHMS	Pan Head Machine Screw
PLOW	Plow Bolt
RHMS	Round Head Machine Screw
RHSNB	Round Head Square Neck Bolt
SCREW LEVELING	Leveling Screw
SCREW THUMB	Thumb Screw
SCREW WELD	Weld Screw
SFCHMS	Slotted Flat Countersunk Head Machine Screw
SFHMS	Slotted Fillister Head Machine Screw
SP	Special
SP SCREW	Special Screw
SQHSS	Square Head Set Screw
SRHMS	Slotted Round Head Machine Screw
SSS	Socket Set Screw
STCS	Self Tapping Cap Screw
STHMS	Slotted Truss Head Machine Screw
WHEEL	Wheel Studs and Hub Long Bolts
WING	Wing Bolt

Replacement Hardware

The **Hardware Legend** above lists hardware abbreviations used in the parts list. All bolts and nuts are Grade 5 unless otherwise noted. The use of improper grades of hardware can result in personal injury, damage to equipment, or loss of property.

Colored Replacement Parts

Land Pride offers replacement parts in factory standard colors and also on select models in Green, Orange, Red and Blue. Because of the variety of colors available, special attention must be given to the part number to prevent ordering the wrong replacement part.

A suffix number corresponding to one of the colors below must be added at the end of Land Pride's part number when ordering a replacement part with that color.

81 . . . . . Green **83 . . . . .Red**
82 . . . . . Orange **84 . . . . .Blue**

For example, if you are ordering a replacement part with part number 555-555C and the part you need is red, then add the suffix 83 to the end of the number to make the part number read 555-555C83. Parts ordered without a suffix number will be supplied in factory standard colors.

Black Replacement Parts

Some parts are factory standard black and some must be special ordered black. If your part is special ordered black, a second part number with the additional suffix number 85 on the end will be available. In this situation you must order that part with the suffix number for it to be black. Parts that are factory standard black will not have the suffix number.

Part Number Service Coding

Within the parts list some part numbers are coded for revisions and interchangeability. See notations in revision column.

Serial Numbers

Always use the serial and model number when ordering parts. Refer to the Operator's Manual for serial number plate location.

(S/N 20001+)	Includes serial numbers 20001 and above (to the latest number)
(S/N 10001 to 20000)	Includes serial numbers between and including 10001 and 20000
(S/N 10000-)	Includes serial numbers 10000 and below (to the earliest number)

Center Deck Pivot

Applies to Models: AFM4216

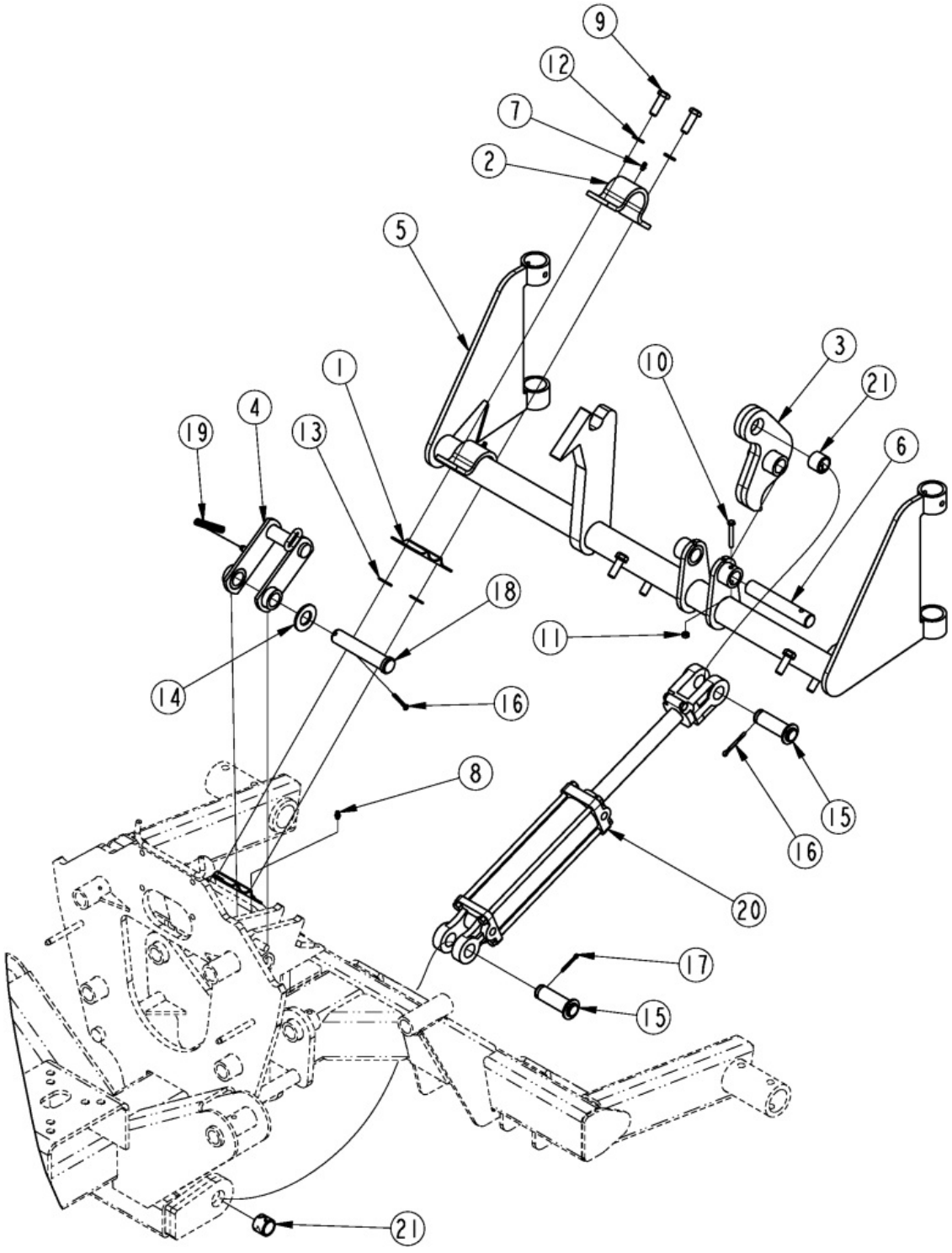

Center Deck Pivot

Applies to Models: AFM4216

Ref.	Part No.	Part Description	Comments
	DWG 25909	Drawing Image Number	
1	175-060D	PIVOT TUBE WEAR PAD	
2	175-061D	PUSH, PVT TB HALF CLMP	
3	315-183H	REAR DECK CYL LUG WELD	
4	315-186H	FLIP LATCH WLDMNT RH	
5	315-420H	AFM4014 & 16 REAR DECK PIVOT	
6	315-487D	REAR DECK CYL LUG PIN	
7	800-001C	GREASE ZERK STRAIGHT 1/4-28	
8	800-080C	GREASE ZERK 1/4-28 THD FORMING	Changed to 800-001C at S/N 1126297+
9	802-091C	HHCS 1/2-13X1 1/2 GR5	
10	802-152C	HHCS 1/4-20X2 GR5	
11	803-007C	NUT LOCK 1/4-20 PLT	
12	804-015C	WASHER LOCK SPRING 1/2 PLT	
13	804-016C	WASHER FLAT 1/2 SAE PLT	
14	804-029C	WASHER FLAT 1 SAE	
15	805-004C	PIN CLVS 1.0X2.75 USBL	
16	805-017C	PIN COTTER 3/16 X 1 3/4 PLT	
17	805-045C	PIN COTTER 5/32 X 1 1/4 LG	
18	805-131C	PIN CLVS 1.0X4.69 USBL	
19	807-026C	PIVOT STOP SPRING	
20	810-200C	CYL 2.5X8X1.12 ROD (TIE)1 PIN	
21	890-005C	BUSHING CYL 1 1/4 X 1 X 1	

Frame

Applies to Models: AFM4216

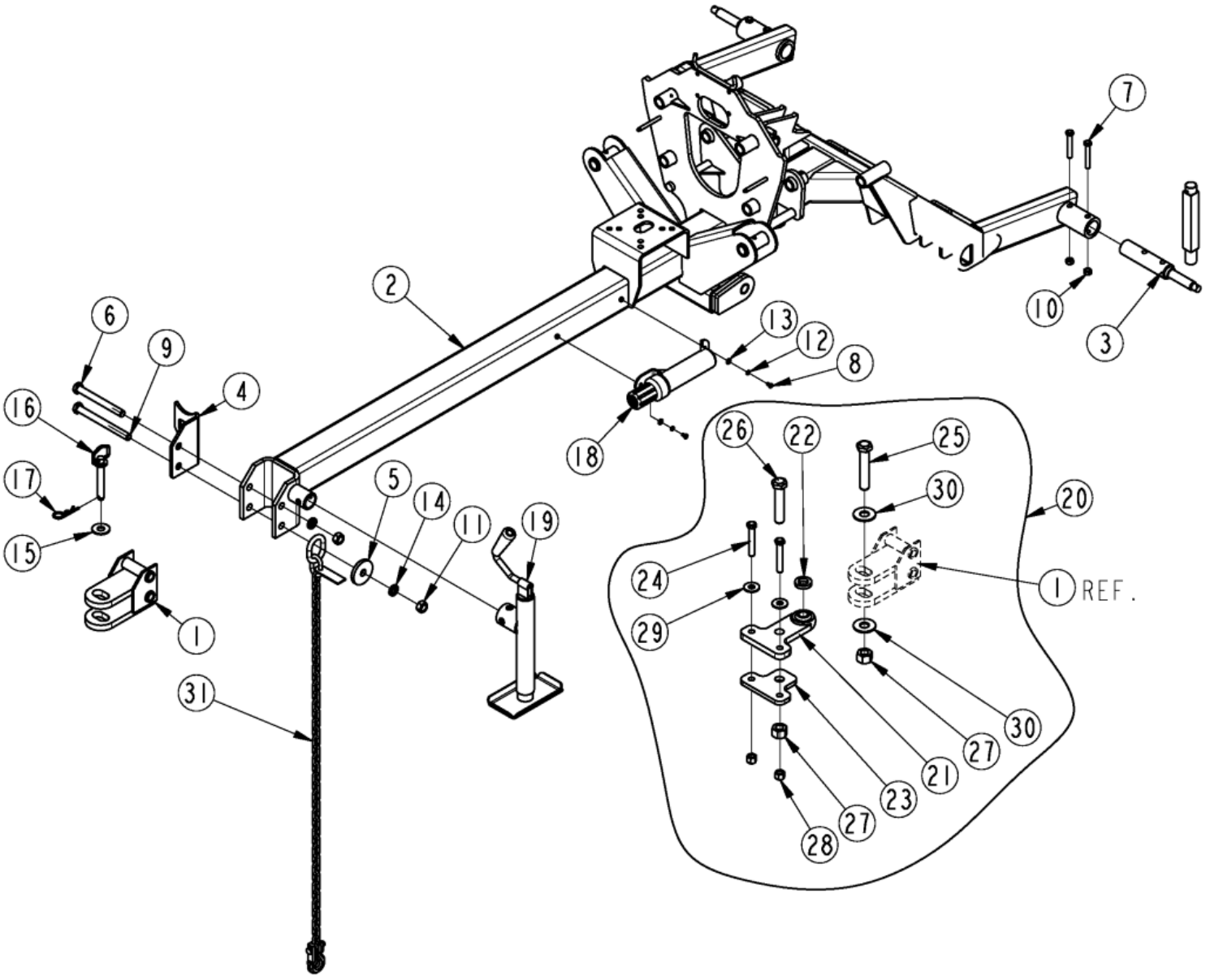

Frame

Applies to Models: AFM4216

Ref.	Part No.	Part Description	Comments
	DWG 25910	Drawing Image Number	
1	315-274H	FRONT HITCH LUG WELDMENT	
2	315-450H	AFM4014/16 TRANSPORT FRAME	S/N 779997+ W/ Adjustable Hitch
3	315-821D	AFM4014/16 BOLT-IN SPINDLE	
4	332-030D	AFM DRVLN REST-HITCH MOUNT	S/N 1059573+
5	401-372D	WASHER, SAFETY CHAIN	
6	802-095C	HHCS 3/4-10X7 GR5	S/N 1059573+
6	802-360C	HHCS 3/4-10X6 1/2 GR5	S/N 1059572-
7	802-099C	HHCS 1/2-13X3 1/4 GR5	
8	802-283C	HHCS 1/4-20X1/2 GR2	
9	802-469C	HHCS 3/4-10X8 GR5 PLT	S/N 1059573+
9	802-280C	HHCS 3/4-10X7 1/2 GR5	S/N 1059572-
10	803-019C	NUT LOCK 1/2-13 PLT	
11	803-027C	NUT HEX 3/4-10 PLT	
12	804-006C	WASHER LOCK SPRING 1/4 PLT	
13	804-007C	WASHER FLAT 1/4 SAE PLT	
14	804-023C	WASHER LOCK SPRING 3/4 PLT	
15	804-237C	3/4 USS PLATED HARDENED WASHER	
16	805-081C	PIN HTCH .75X4.25 USBL W/PIN	
17	805-088C	PIN, HAIR COTTER 3/16 WIRE DIA	
18	816-504C	MANUAL STORAGE CONTAINER	
19	890-118C	SCREW JACK 2000# 14-24 TOP-WND	
20	315-370A	BALL SWIVEL HITCH ASSEMBLY	Optional Ball Swivel Hitch Includes items 21 thru 30
21	315-369H	BALL SWIVEL MOUNT PLATE	
22	315-753D	HITCH SPACER TUBE	
23	315-754D	BALL SWIVEL MOUNT BOTTOM PLATE	
24	802-060C	HHCS 5/8-11X4 GR5	
25	802-205C	HHCS 1-8X5 1/2 GR5	
26	802-235C	HHCS 1-8X5 GR5	
27	803-038C	NUT HEX 1-8 NYLON INSERT PLT	
28	803-148C	NUT HEX NYLOCK 5/8-11 PLT	
29	804-019C	WASHER FLAT 5/8 USS PLT	
30	804-028C	WASHER FLAT 1 USS PLT	
31	891-246C	AG SAFETY CHAIN 6400 LB	S/N 693970+
31	890-182C	SAFETY CHAIN 10000 LB	S/N 693969-

Pull Latch Cord Lock-Up

Applies to Models: AFM4216

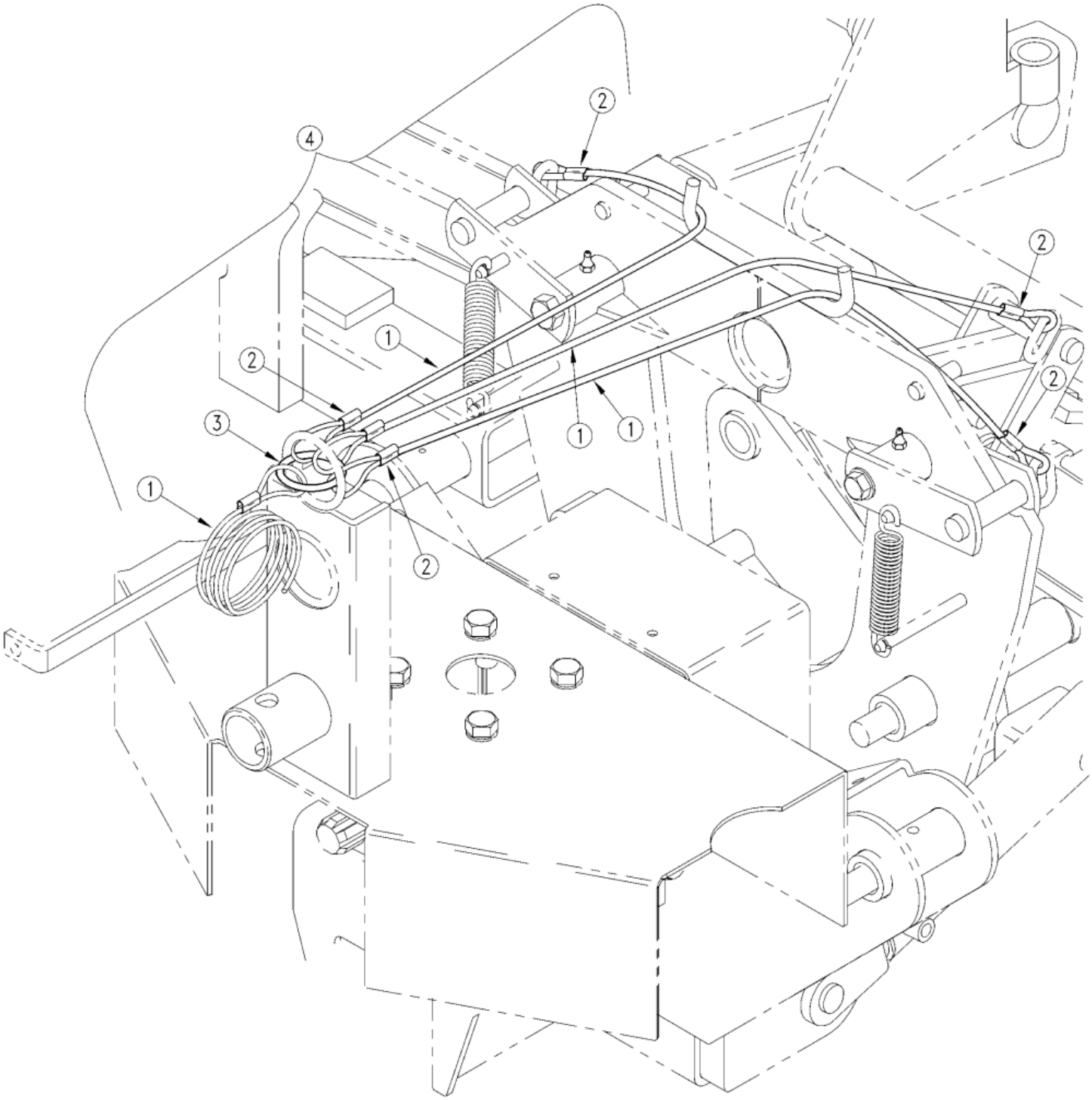

Pull Latch Cord Lock-Up

Applies to Models: AFM4216

Ref.	Part No.	Part Description	Comments
	DWG13552	Drawing Image Number	
1	890-337C	CORD-PARACHUTE 3/16	Right & Left Hand Deck 34" Long and Center 44" Long. Frame to Tractor 156" Long. Total Length 23 Ft. Sold only in 12" increments
2	890-589C	5/32 I.D. OVAL SLEEVE	
3	890-332C	WELDED RING 1/4 X 2	
4	315-747K	DECK LATCH PULL ROPE KIT-FRONT	
		*	
		NOTES:	
		When Installing Cord to Deck Latchs Be Sure to Apply Tension to Cord For Poper Operation.	

Right Hand and Left Deck Pivot

Applies to Models: AFM4216

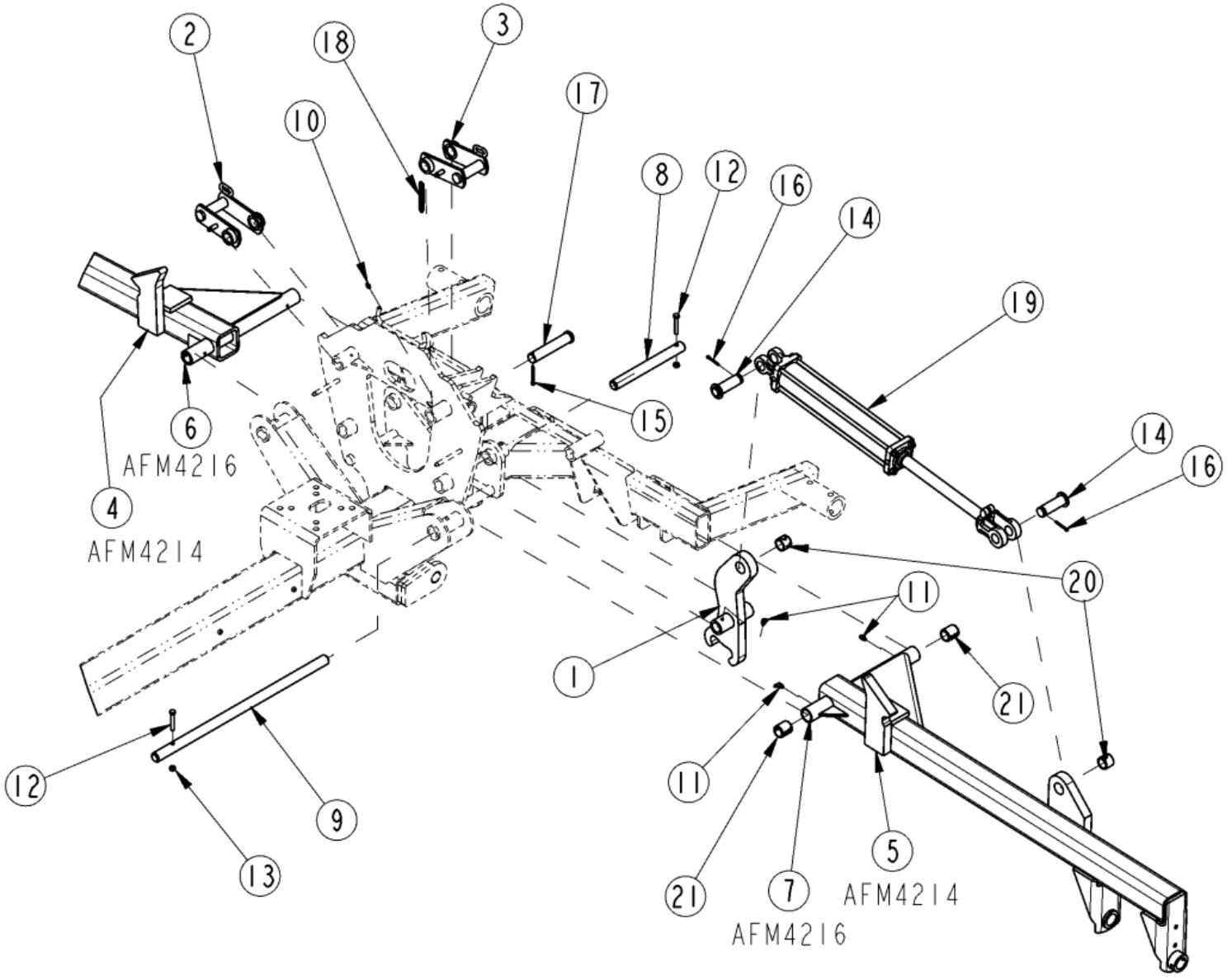

Right Hand and Left Deck Pivot

Applies to Models: AFM4216

Ref.	Part No.	Part Description	Comments
	DWG 25911	Drawing Image Number	
1	315-182H	WING FLEX LUG AFM40168/200	
2	315-186H	FLIP LATCH WLDMNT RH	
3	315-198H	FLIP LATCH WELDMENT LH	
4	315-230H	4014 R.H. TOOLBAR WELD	AFM4214
5	315-231H	4014 L.H. TOOLBAR WELD	AFM4214
6	315-178H	RH WING TOOL BAR AFM4016	AFM4216
7	315-177H	LH WING TOOL BAR AFM4016	AFM4216
8	315-564D	DECK FLEX PIVOT PIN	
9	315-565D	40200 TOOLBAR PIVOT PIN	
10	800-001C	GREASE ZERK STRAIGHT 1/4-28	S/N 1126297+
10	800-080C	GREASE ZERK 1/4-28 THD FORMING	S/N 1126296-
11	800-058C	GREASE ZERK 1/4-28 X 45-DEG	S/N 1126297+
11	800-136C	ZERK 1/4-28 X 45 DEG SELF-TAP	S/N 1126296-
12	802-115C	HHCS 5/16-18X2 GR5	
13	803-011C	NUT LOCK 5/16-18 PLT	
14	805-004C	PIN CLVS 1.0X2.75 USBL	
15	805-017C	PIN COTTER 3/16 X 1 3/4 PLT	
16	805-045C	PIN COTTER 5/32 X 1 1/4 LG	
17	805-131C	PIN CLVS 1.0X4.69 USBL	
18	807-026C	PIVOT STOP SPRING	
19	810-150C	CYL 2.5X12X1.25 ROD (TIE ROD)	
20	890-005C	BUSHING CYL 1 1/4 X 1 X 1	
21	890-278C	BUSHING CYL 1 1/4 X 1 X 1 3/8	

Tire and Hub

Applies to Models: AFM4216

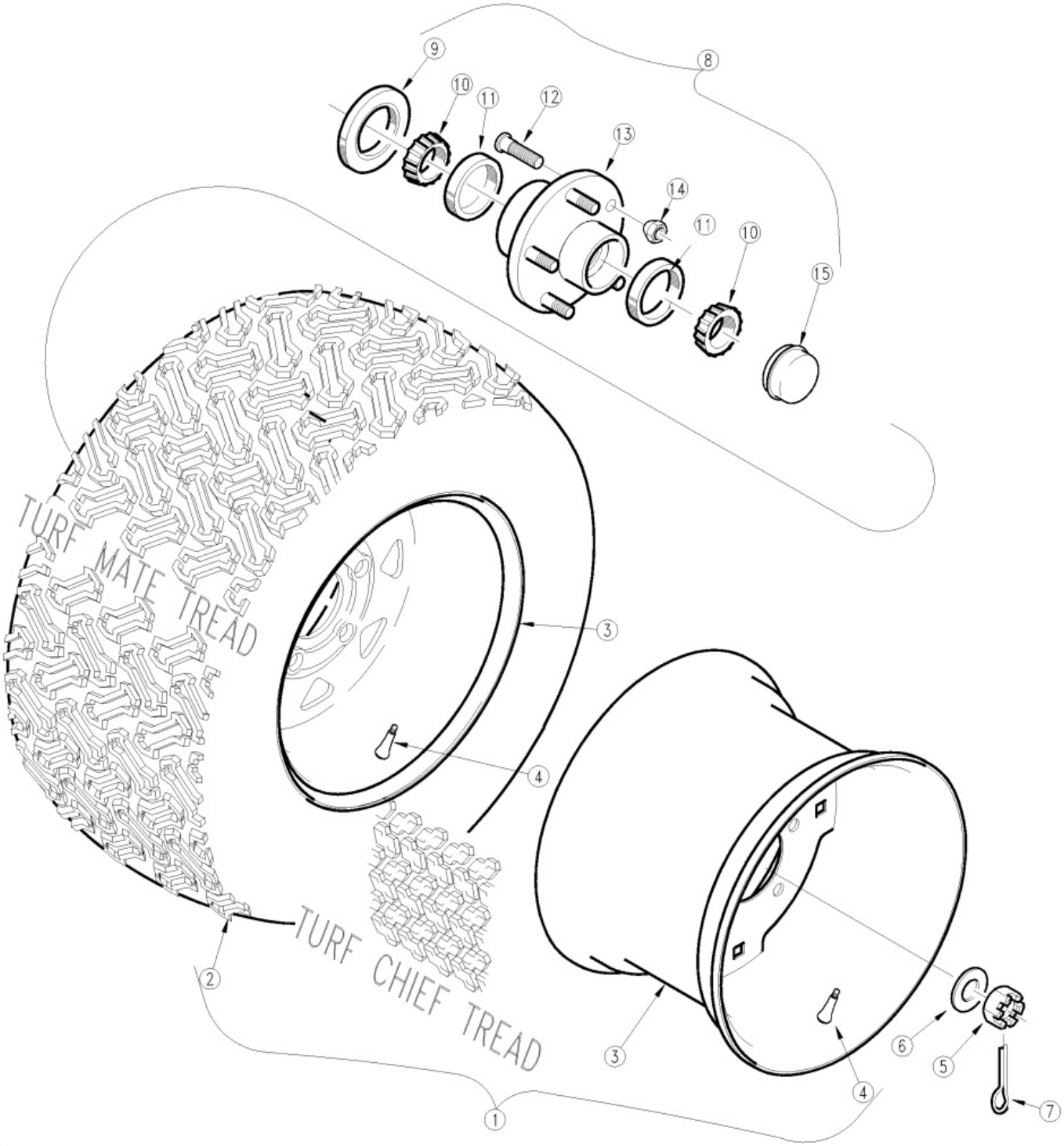

Tire and Hub

Applies to Models: AFM4216

Ref.	Part No.	Part Description	Comments
	DWG13589	Drawing Image Number	
1	814-382C	TIRE & WHL ASY 23X10.5-12 6PLY	S/N 648445+
1	814-100C	RPBY 814-382C	(Obsolete) S/N 648444-
2	574353	CL TIRE 23X10.5-12 6P MLTI-TRC	S/N 648445+
2	0511421-710	CL TIRE 23X10.5-12 4P TM TL	Turf Mate S/N 648444-
2	051172600710	CL TIRE 23X10.50-12 4P CHIEF	Turf Chief S/N 648444-
3	30-449S6B	TILDEN RIM 12X8.50,8SPOKED BLK	
4	TR-412	T1. VALVE MARTIN	
5	803-053C	NUT HEX SLOTTED 3/4-16	
6	804-025C	WASHER FLAT 3/4 SAE PLT	
7	805-045C	PIN COTTER 5/32 X 1 1/4 LG	
8	815-052C	HUB ASSY 5 BOLT 4 1/2 B.C.	
9	816-014C	TINE GAUGE WHEEL HUB SEAL	
10	822-030C	BRG CONE 1.00ID L44643	
11	822-080C	BRG CUP 1.98OD L44610	
12	BO-47	NEILSON STUD 1/2-20UNFX1 13/16	
13		NEILSON 5 BOLT HUB	
14	803-159C	NUT LUG 1/2-20X60DEG PLT(.75AF	
15	890-614C	GREASE CAP #1505	

Driveline (826-371C) Comer

Applies to Models: AFM4216

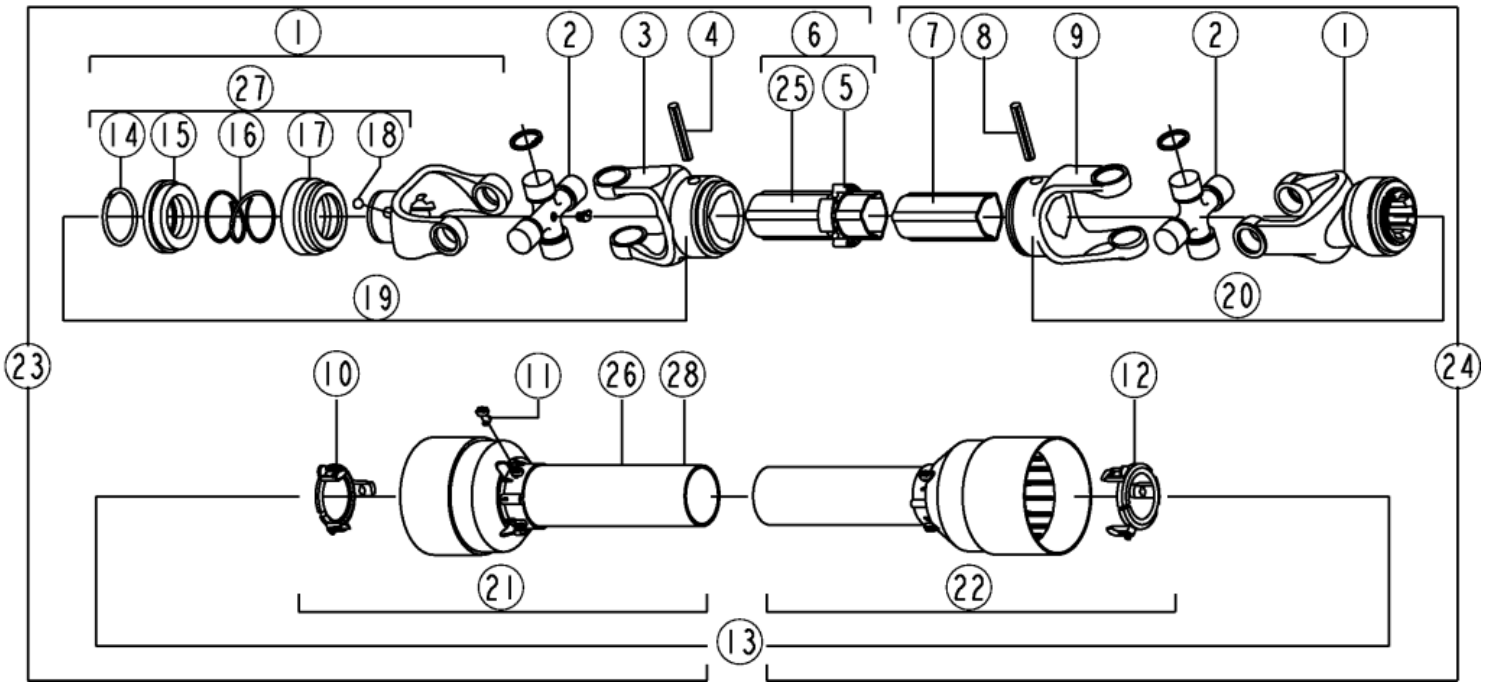

Driveline (826-371C) Comer

Applies to Models: AFM4216

Ref.	Part No.	Part Description	Comments
	DWG 72828	Image No.	
	826-371C	DRVLN C3 34 1.38-6 QD *	
1	141.024.430.1	CO COMPLETE COLLAR YOKE C12	
2	180.014.130	CO CROSS JOURNAL SET	
3	151.014.006.1	CO OUTER YOKE	
4	190.000.014	CO ROLL PIN FOR OUTER TUBE	
5	180.014.291	CO BUSH WITH GREASE FITTING	
6	152.140.3310710	CO COMPLETE OUTER TUBE	
7	153.140.165	CO INNER TUBE	
8	190.000.012	CO ROLL PIN FOR INNER TUBE	
9	151.014.007.1	CO INNER YOKE	
10	180.014.233	CO GRD COLLER OUTER TUBE	
11	180.014.240	COMER BOLT	
12	180.014.232	CO GRD COLLER INNER	
13	142.240.5227421	CO COMPLETE GUARD W/MANUAL	
14	190.000.451	COMER OUTER CIRCLIP	
15	151.016.486	COMER SLIDING SLEEVE COLLER	
16	180.016.487	COMER SPRING	
17	180.016.483	COMER FIXED SLEEVE	
18	190.000.078	COMER BALL 1/2"	
19	121.024.760.11	CO U JOINT FOR OUTER TUBE	
20	121.024.761.11	CO U JOINT FOR INNER TUBE	
21	142.246.2167421	CO HALF FEMALE GUARDING	
22	142.247.2267421	CO HALF MALE GUARDING	
23	123.340.390.11	CO HALF FEMALE SHAFT W/GUARD	
24	123.440.760.11	CO HALF MALE SHAFT W/GUARD	
25	190.000.098	COMER DANGER LABEL OUTER TUBE	
26	190.000.099	COMER DANGER LABEL GUARD OUTER	
27	165.000.628	COMER COLLAR KIT 1 3/8 YOKE	
28	190.000.954	CO LABEL W/CUSTOMER NUMBER	

Driveline (826-371C) Eurocardan

Applies to Models: AFM4216

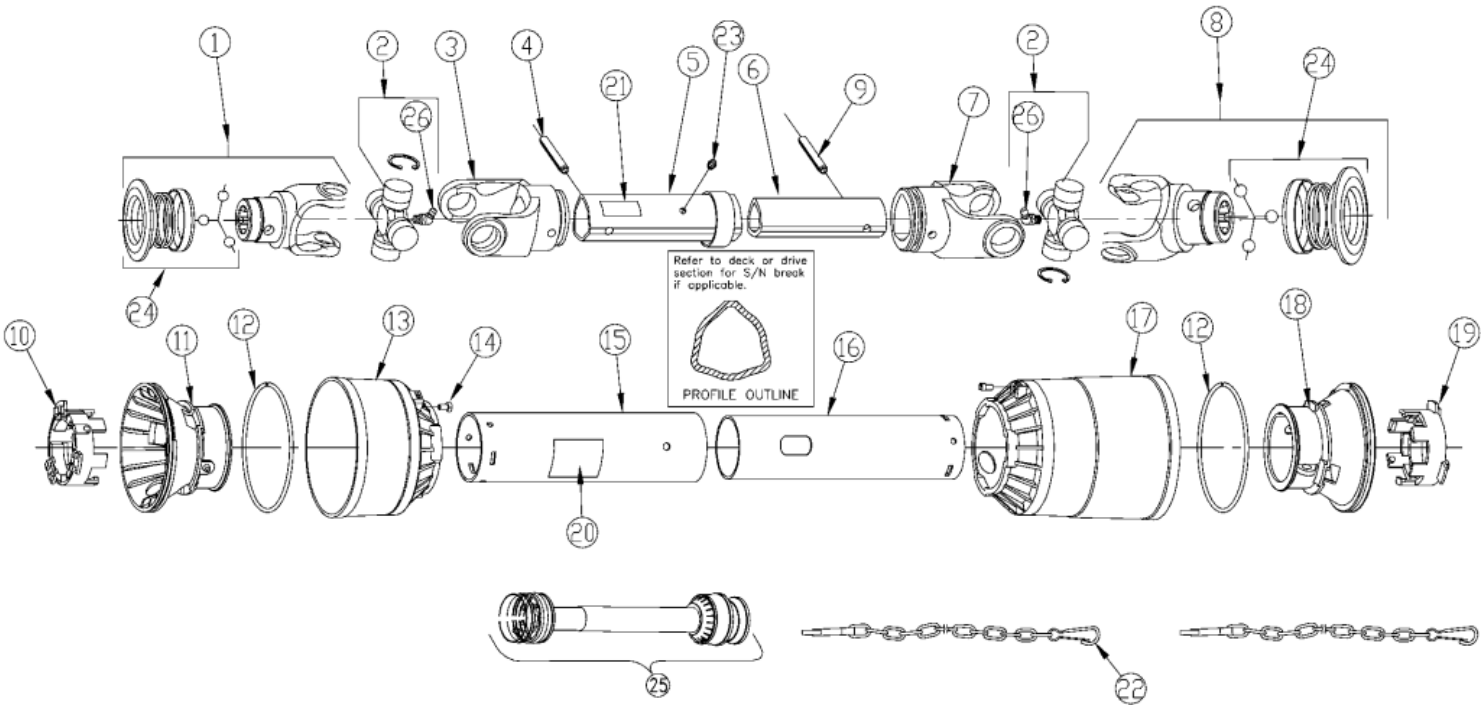

Driveline (826-371C) Eurocardan

Applies to Models: AFM4216

Ref.	Part No.	Part Description	Comments
	DWG22022	Drawing Image Number	
	826-371C	DRVLN C3 34 1.38-6 QD	
1	1014113	EC YOKE ASSEMBLY (TRACTOR END)	
2	1004020	EC CROSS ASSEMBLY (U JOINT)	
3	1704027	EC OUTER TUBE YOKE	
4	6330860	EC 08X60 1485DIN ROLL PIN	
5	1524902	EC OUTER TUBE	
6	1525072	EC INNER TUBE (1525095) 720MM	
7	1704029	EC INNER TUBE YOKE	
8	1014113	EC YOKE ASSEMBLY (TRACTOR END)	
9	6330855	EC 8X55-DIN-1481 O/TUBE R/PIN	
10	1784210	EC TUBE BRG	
11	1884201	EC OUTER TUBE RIGID CONE	
12	1213233	EC STIFFENING RING	
13	1884203	EC SOFT CONE	
14	1784212	EC PIN STOP ROTATION	
15	1873901	EC OUTER TUBE SHIELD	
16	1872901	EC INNER SHIELD TUBE	
17	1884205	EC SOFT LONG CONE	
18	1884202	EC INNER TUBE RIGID CONE	
19	1784211	EC TUBE BRG	
20	818-552C	DECAL DANGER PTO DRIVELINE	
21	818-540C	DECAL DANGER GUARD MISS PTO	
22	044321	DRIVELINE SHIELD SAFETY CHAIN	(S/N 946472-)
23	6561306	EC GREASE ZERK M6X1 EXTRA SHRT	
23	6560006	RPBY 6561306	Obsolete
24	1004229	EC PULL COLLAR REPLACEMENT KIT	
25	826-552C	SHIELD KIT, AX3 & AX4	
26	084099	WS ZERK M8 X 1 X 45 DEG	

Driveline Arrangement

Applies to Models: AFM4216

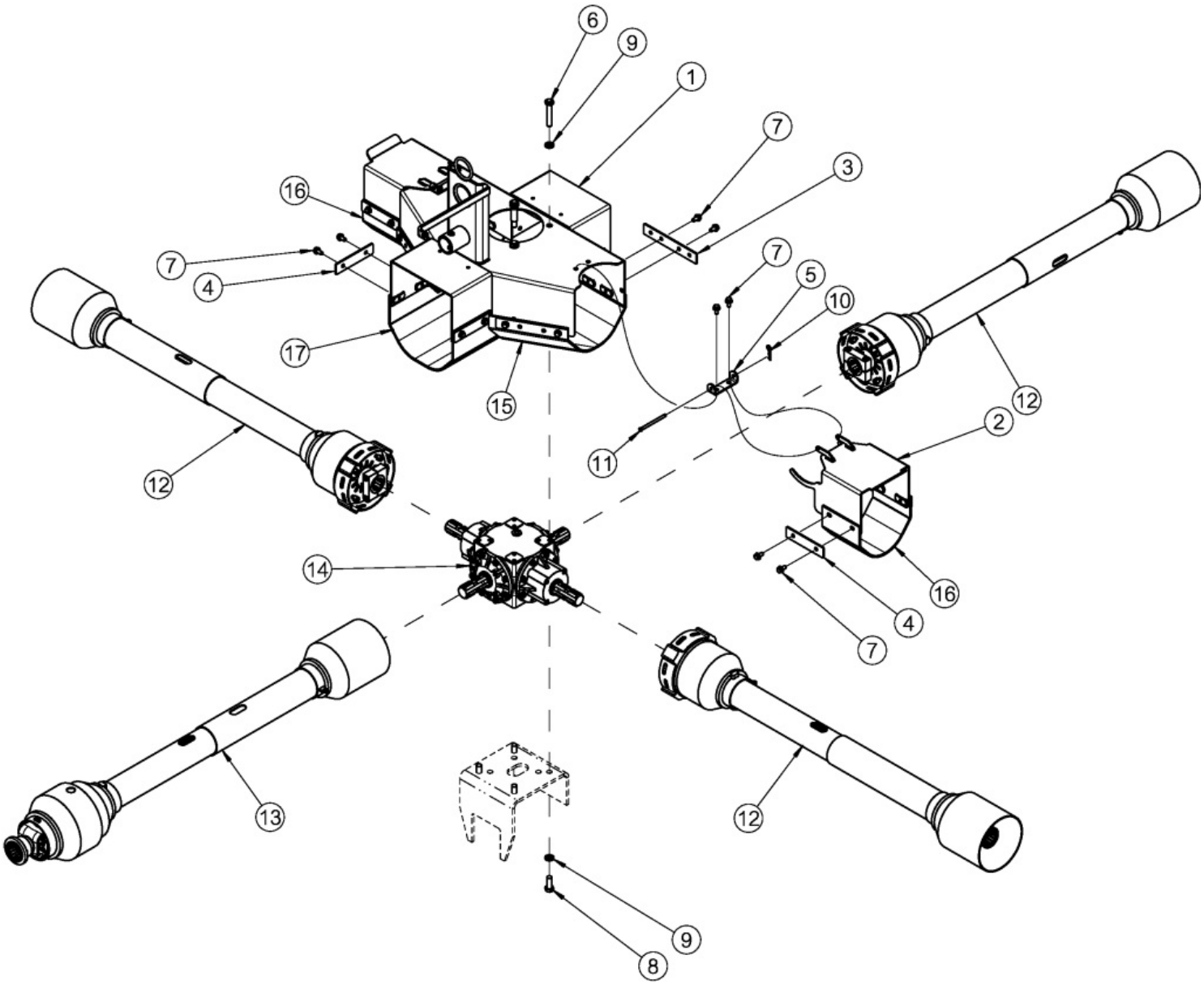

Driveline Arrangement

Applies to Models: AFM4216

Ref.	Part No.	Part Description	Comments
	DWG25931	Drawing Image Number	
1	315-811H	SPLITTER BOX COVER,AFM14,16,22	S/N 1965279+
1	315-448H	AFM14,16,22 SPLITTER BOX COVER	S/N 1965278-
2	332-011H	COVER WELDMENT, AFM DRIVELINE	
3	332-104D	AFM STRAP, SIDE	S/N 1965279+
4	332-107D	AFM STRAP, FRONT	S/N 1965279+
5	332-115D	HINGE PLATE, AFM DL COVER	S/N 1965456+
6	802-226C	HHCS 1/2-13X2 3/4 GR5	
7	802-488C	HFSS 5/16-18X5/8 GR5	S/N 1965279+
8	802-689C	HHCS 1/2-13X1 1/4 GR5 NYL	
9	804-015C	WASHER LOCK SPRING 1/2 PLT	
10	805-010C	PIN HAIR COTTER .094	S/N 1965456+
11	805-299C	PIN CLVS .25X3.34 USBL	S/N 1965456+
12	826-111C	DRVLN C2 34 1.38-6 QD CLTCH	
12	826-371C	DRVLN C3 34 1.38-6 QD	
13	826-143C	DRVLN C4 52 1.38-6 CV	
13	826-842C	DRVLN C4 49 1.38-6 CV CLTCH	(AFM4214 S/N 981863+)(AFM4216 S/N 981504+)
13	315-745A	AFM14/16 CV DRVLN KIT	Includes driveline 826-842C
13	826-370C	RPBY 315-745A	Obsolete (AFM4214 S/N 981862-)(AFM4216 S/N 981503-)
14	826-274C	GBOX DIVIDER 1:1	
15	836-189C	AFM GUARD RUBBER	S/N 1965279+
16	836-202C	AFM FRONT GUARD, RUBBER	S/N 1965279+
17	836-244C	AFM GUARD, RUBBER	S/N 2206664+

Driveline (826-111C) Walterscheid

Applies to Models: AFM4216

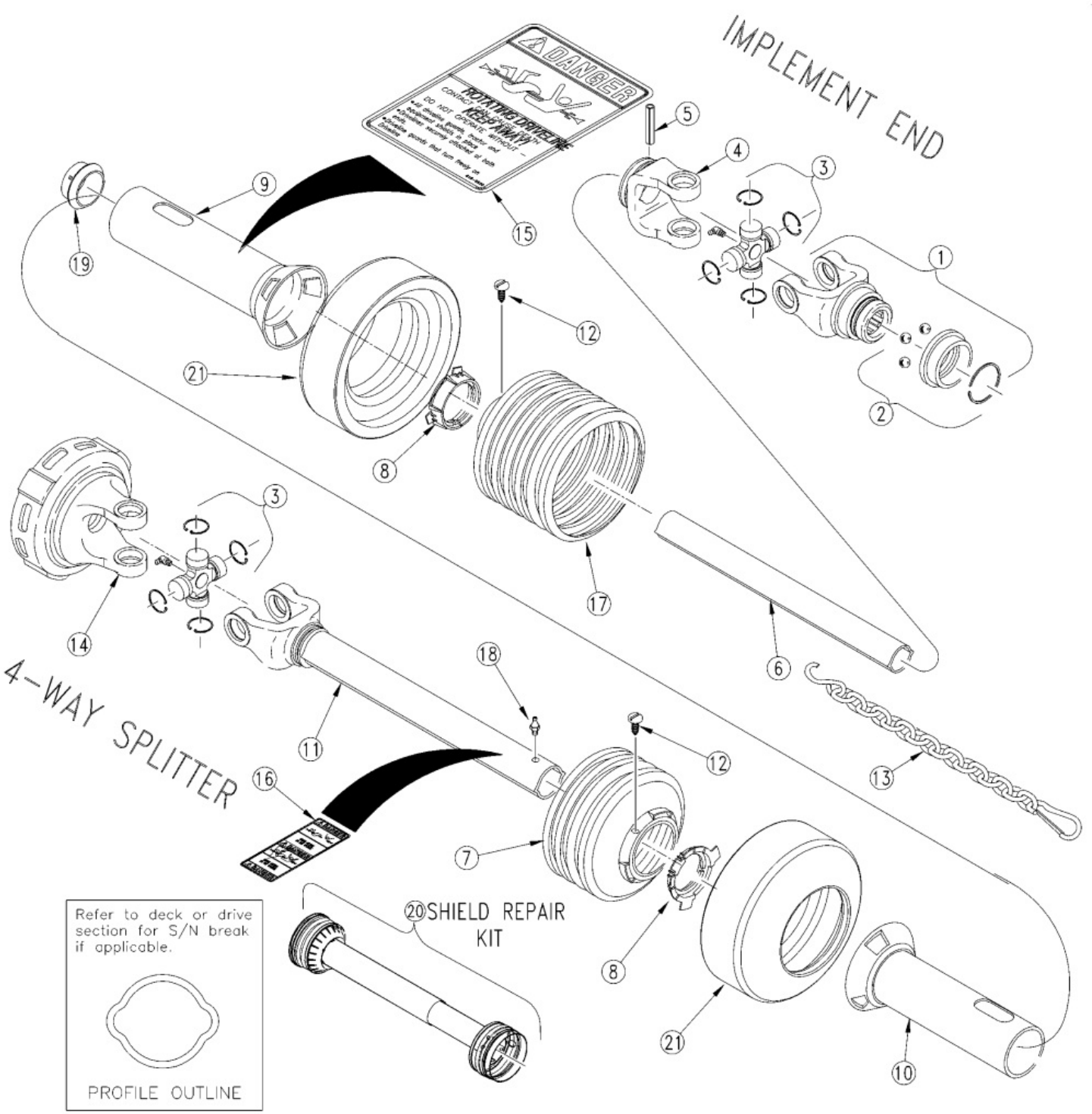

Driveline (826-111C) Walterscheid

Applies to Models: AFM4216

Ref.	Part No.	Part Description	Comments
	DWG 13449	Drawing Image Number	
	826-111C	DRVLN C2 34 1.38-6 QD CLTCH *	
1	196837	RPBY 133832	Rev. 2
1	380905	RPBY 196837	(Obsolete) Rev 1; Use up stock
2	390404	WS ASGE COLLAR KIT	Rev. 2
2	381908	RPBY 390404	(Obsolete) Rev 1; Use up stock
3	044439	WALTSCHEID CROSS & BRG KIT	
4	041065	WS INBOARD YOKE	
5	020614	WS SPRING PIN	
6	047680	WS INNER PROFILE	
7	377234	WS SHIELD CONE-4 RIB	
8	087279	WS BRG RING	
9	392052	WS OUTER SHIELD OVL.	(S/N 259230+) Rev. 2 not compat. w/Rev. 1
9	387332	RPBY 392052	Obsolete (S/N 259229+) Rev. 1
10	392050	WS INNER SHIELD RND.	(S/N 259230+) Rev. 2 not compat. w/Rev. 1
10	387266	RPBY 392050	Obsolete (S/N 259229+) Rev. 1
11	390289	WS YOKE W/OTR PROFILE	
12	365305	WS SCREW	
13	044321	DRIVELINE SHIELD SAFETY CHAIN	(S/N 946472-)
14	053314	WS FRICTION CLUTCH	
15	818-552C	DECAL DANGER PTO DRIVELINE	
16	818-540C	DECAL DANGER GUARD MISS PTO	
17	377240	WS SHIELD CONE-10RIB	
18	380371	WS ZERK	(S/N 259230+)
19	355154	WS SUPPORT BRG	(S/N 259230+)
20	826-597C	SHIELD KIT, 826-111C	
21	359471	WS REINFORCING COLLAR	

Driveline (826-143C) Walterscheid

Applies to Models: AFM4216

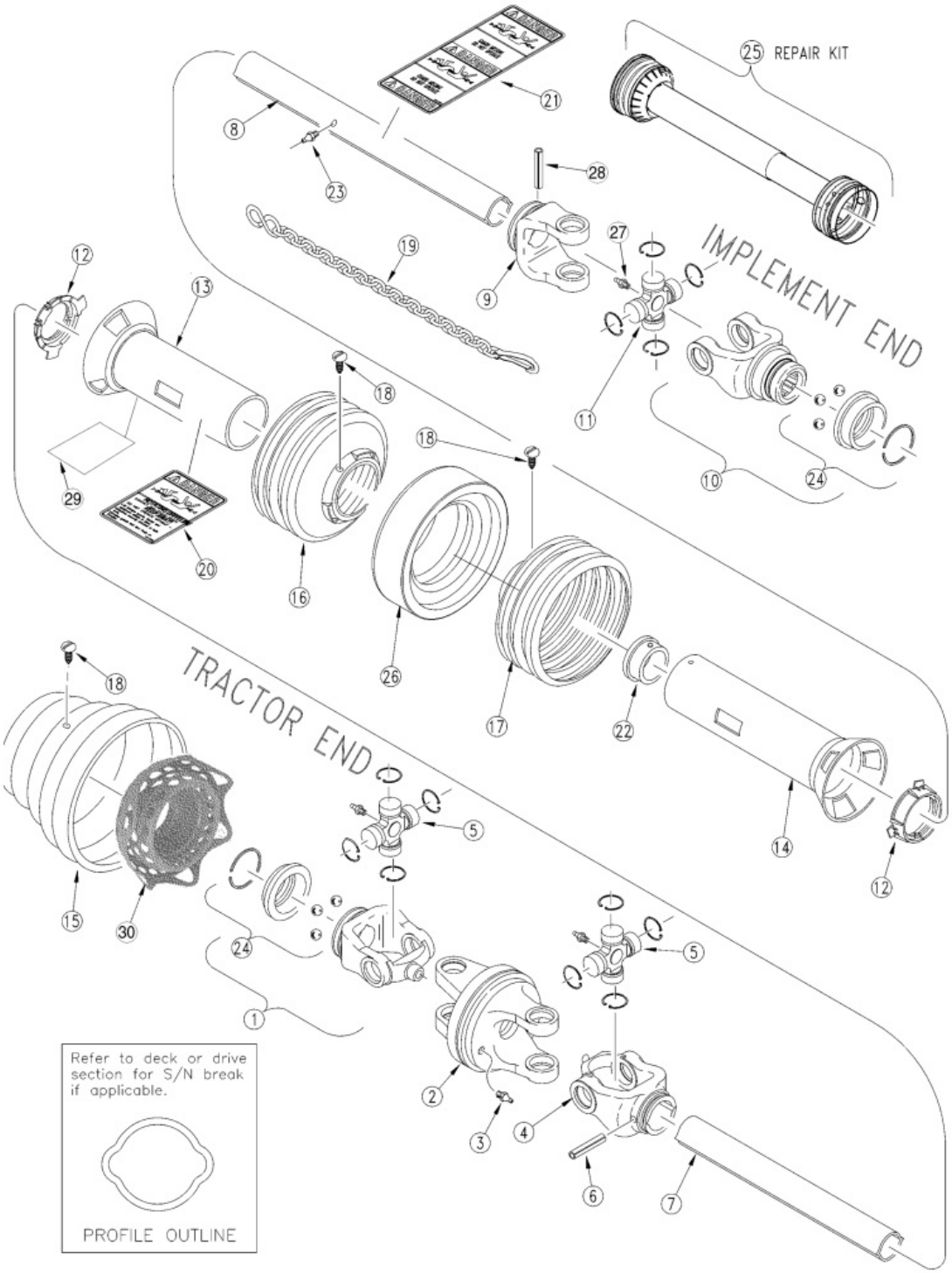

Driveline (826-143C) Walterscheid

Applies to Models: AFM4216

Ref.	Part No.	Part Description	Comments
	DWG 13812	Drawing Image Number	
	826-143C	DRVLN C4 52 1.38-6 CV *	
1	695580	WS YOKE 1 3/8-6 ASGE	
2	365722	WS DOUBLE YOKE	
3	6560208	EC GREASE ZERK M8 STRAIGHT	
4	134713	WS INBOARD YOKE 1B	
5	393500	WS CROSS & BEARING KIT	
6	020616	WS SPRING PIN 10 X 75	
7	316201	WS INNER PROFILE 16GA	
8	383231	WS PROFILE & SLEEVE	
9	019519	WS INBOARD YOKE	
10	133836	WS YOKE 1 3/8-6 ASGE	
11	188105	WS CROSS & BEARING KIT	
12	087276	WS BRG RING - SC25	
13	371629	WS GUARD TUBE OUTER	
14	371183	WS IN SHIELD RND 990MM	
14	385954	RPBY 371183	Obsolete
15	395453	WS CV GUARD & BEARING ASSY	
16	172758	WS SHIELD CONE 3 RIB	
17	127136	WS GUARD CONE 6 RIB	
18	365305	WS SCREW	
19	044321	DRIVELINE SHIELD SAFETY CHAIN	(S/N 946472-)
20	818-552C	DECAL DANGER PTO DRIVELINE	
21	818-540C	DECAL DANGER GUARD MISS PTO	
22	355155	WS SUPPORT BRG	
23	380371	WS ZERK	
24	390404	WS ASGE COLLAR KIT	Rev. 2 (Items 1 & 10)
24	381908	RPBY 390404	(Obsolete) Rev 1; Use up stock
25	826-604C	SHIELD KIT, 826-143C	
26	359471	WS REINFORCING COLLAR	
27	6560208	EC GREASE ZERK M8 STRAIGHT	
28	020617	WS SPRING PIN 10 X 80	
29	388138	WS LUBRICATION DECAL	
30	134847	WS FLEX NET & GUARD ASSY.	

Driveline (826-370C) Eurocardan

Applies to Models: AFM4216

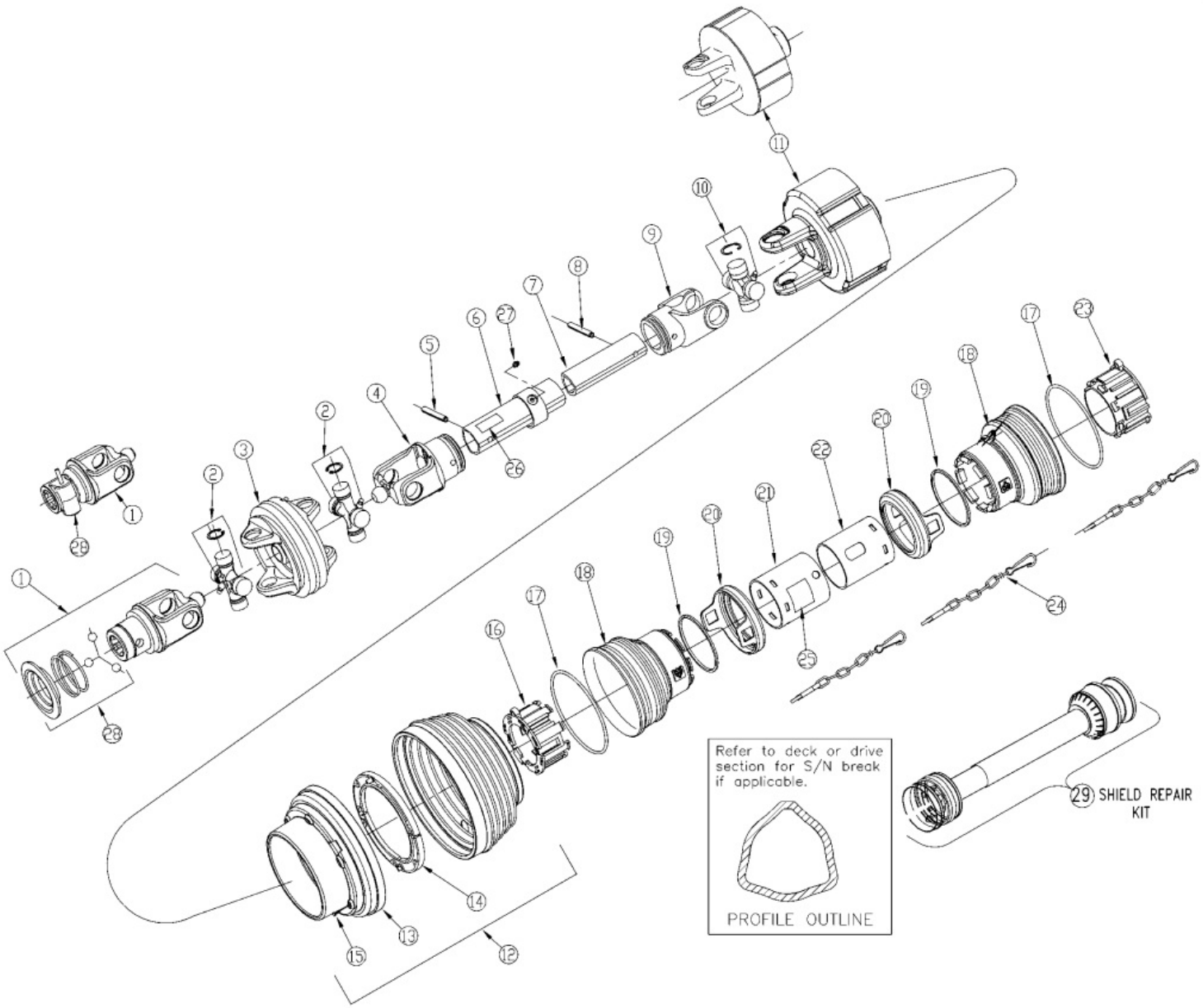

Driveline (826-370C) Eurocardan

Applies to Models: AFM4216

Ref.	Part No.	Part Description	Comments
	DWG 22023	Drawing Image Number	
	826-370C	RPBY 315-745A *	Obsolete (AFM4214 S/N 981862-)(AFM4216 S/N 981503-)
1	1006875	EC PULL TYPE YOKE	Pull collar yoke
1	1006865	EC PULL COLLAR YOKE 1.38-6	
1	1006803	RPBY 1006865	(Obsolete) Push-pin yoke
2	1006840	EC G06 CROSS ASSEMBLY	
3	1006831	EC HOMOKINETIC JOINT	
4	1006827	EC OUTER TUBE HOMOKINETIC YOKE	
5	6331080	EC 10X80-DIN-1481 O/TUBE R/PIN	
6	1548900	EC OUTER TUBE	
7	1546096	EC INNER TUBE 960MM	
8	6331070	EC 10X70 ROLL PIN	
9	1706029	EC INNER TUBE YOKE	
10	1006020	EC CROSS ASSEMBLY	
11	1466707	EC BD4/6 1600NM PULL EVOLUTION	Pull collar yoke
11	1466607	EC CLUTCH BD4/6 1600NM	
11	1466305	RPBY 1466607	(Obsolete) Push-pin yoke
12	9190601	EC WIDE ANGLE PROTECTION	
13	1886803	EC SOFT CONE	
14	1786801	EC BRG SOFT CONE	
15	6280313	EC SELF THREADING SCREW	
16	1786710	EC TUBE BRG (OUTER TUBE)	
17	1215733	EC STIFFENING RING	
18	1885702	EC SHORT CONE	
19	1215735	EC STOP RING	
20	1885709	EC SAFETY SLEEVE	
21	1876902	EC OUTER TUBE SHIELD	
22	1877902	EC INNER TUBE SHIELD	
23	1786711	EC TUBE BRG (INNER TUBE)	
24	044321	DRIVELINE SHIELD SAFETY CHAIN	(S/N 946472-)
25	818-552C	DECAL DANGER PTO DRIVELINE	
26	818-540C	DECAL DANGER GUARD MISS PTO	
27	6561306	EC GREASE ZERK M6X1 EXTRA SHRT	
28	1004227	EC PULL COLLAR KIT EVOLUTION	
28	1581036	EC PUSH-PIN KIT CV YOKES 1 3/8	
29	826-573C	SHIELD KIT, 826-370C	

Driveline (826-842C) Weasler

Applies to Models: AFM4216

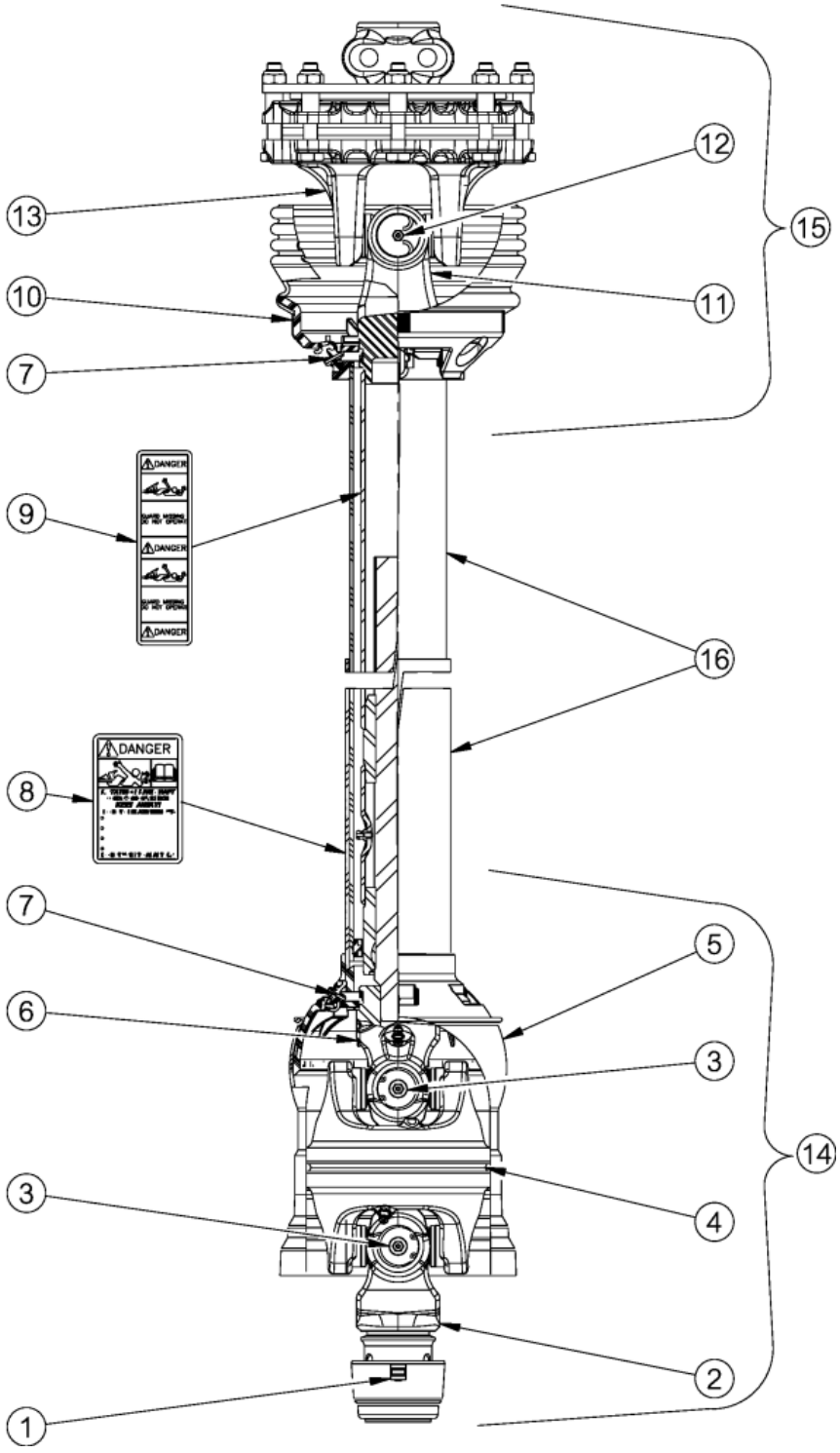

Driveline (826-842C) Weasler

Applies to Models: AFM4216

Ref.	Part No.	Part Description	Comments
	DWG 39402	Drawing Image Number	
	826-842C	DRVLN C4 49 1.38-6 CV CLTCH *	Complete assembly
1	26-15120	WE SSL/AUTO-LOK REPAIR KIT	
2	86810-1008	WE WWCV AUTO-LOK YOKE ASM	
3	03-15450	WE AB6/AW22/CAT 4 80DEG CROSS	
4	26-15159	WE WWCV CENTER HOUSING	
5	97-26711	WEASLER OUTER GUARD	
6	99-26711	WE WWCV YOKE & SHAFT	
7	19-15126	WEASLER GUARD REPAIR KIT	
8	13-10021	WE SAFETY SIGN	
9	13-10022	WE SAFETY SIGN	
10	96-26711	WEALSER INNER GUARD	
11	98-26711	WE YOKE, TUBE & SLIP SLEEVE	
12	03-10326	WE 35RBL CROSS KIT	
13	45-10050	WE CLUTCH, 35, FRICTION	
14	93-26711	WE JOINT & SHAFT HALF,GUARDED	
15	92-26711	WEASLER JOINT & SFT HALF,GRD	
16	90-26711	WE GUARD SET	

Driveline Slip Clutch (053314) Walterscheid

Applies to Models: AFM4216

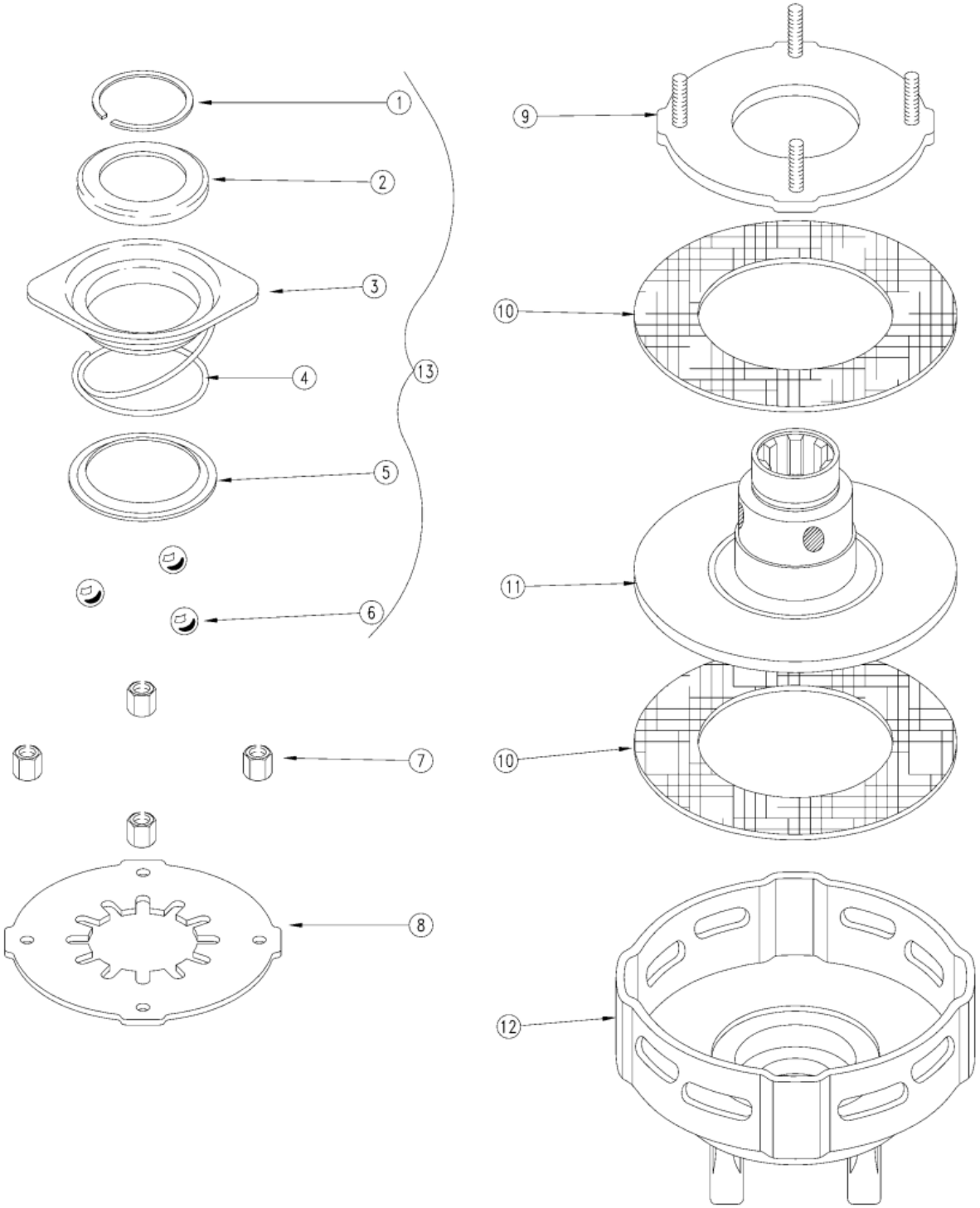

Driveline Slip Clutch (053314) Walterscheid

Applies to Models: AFM4216

Ref.	Part No.	Part Description	Comments
	DWG 10600	Drawing Image Number	
	053314	WS FRICTION CLUTCH *	
1	304149	WS SNAP RING	
2	338531	WS FLANGED RING	
3	045790	WS LOCK COLLAR	
4	045793	WS COMPRESSION SPRNG	
5	047825	WS BACK UP RING	
6	020692	WS BALL	
7	381957	WS HEX NUT M8	
8	043489	WS BELLEVILLE SPRING	To increase NM to 650 use 2 ea 043487
9	381495	WS THRUST PLATE	
10	168556	WS FRICTION DISK	
11	051551	WS HUB 1 3/8-6 SPL	
12	197644	WS CLUTCH HOUSING	
12	041180	RPBY 197644	Obsolete
13	341953	WS Q.D. FLG. KIT	

Driveline Slip Clutch (1466607) Eurocardan

Applies to Models: AFM4216

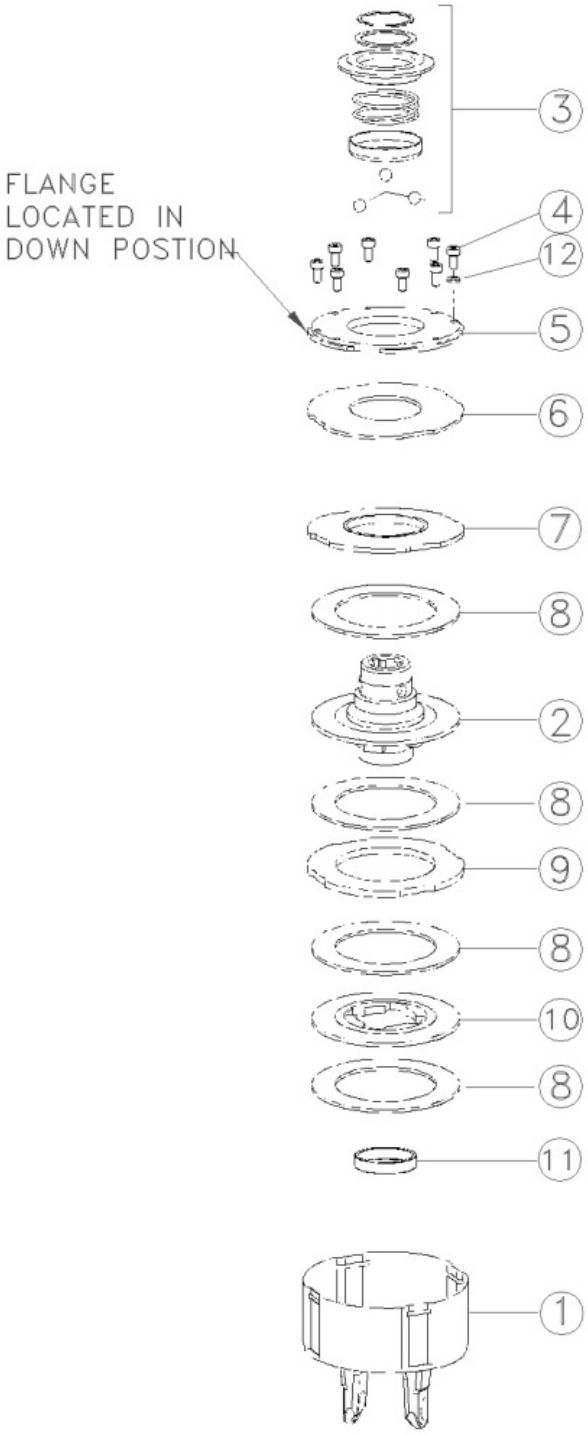

Driveline Slip Clutch (1466607) Eurocardan

Applies to Models: AFM4216

Ref.	Part No.	Part Description	Comments
	DWG 23890	Drawing Image Number	
	1466607	EC CLUTCH BD4/6 1600NM *	
1	1466001	EC OUTER BODY FOR BD4/6	
2	1706085	EC HUB WITH FLANGE 1.38-6	
3	1004227	EC PULL COLLAR KIT EVOLUTION	
3	1004225	RPBY 1004227	Obsolete
4	6040818	EC SCREW M8X18 (GRADE 10.9)	
4	6040816	RPBY 6040818 & 6402901	(Obsolete) replaced with a screw and washer
5	1134012	EC CLOSURE FLANGE	
6	1216914	EC SPRING (R1300NM)	
6	1216907	RPBY 1216914	Obsolete
7	1134011	EC PRESSURE FLANGE	
8	1806010	EC FRICTION DISC	
9	1136008	EC INT. FLANGE	
10	1136010	EC HUB DISC	
11	1705009	EC CLUTCH BUSHING	
12	6402901	EC WASHER 8.5X14X2	

Driveline Slip Clutch (1466707) Eurocaran

Applies to Models: AFM4216

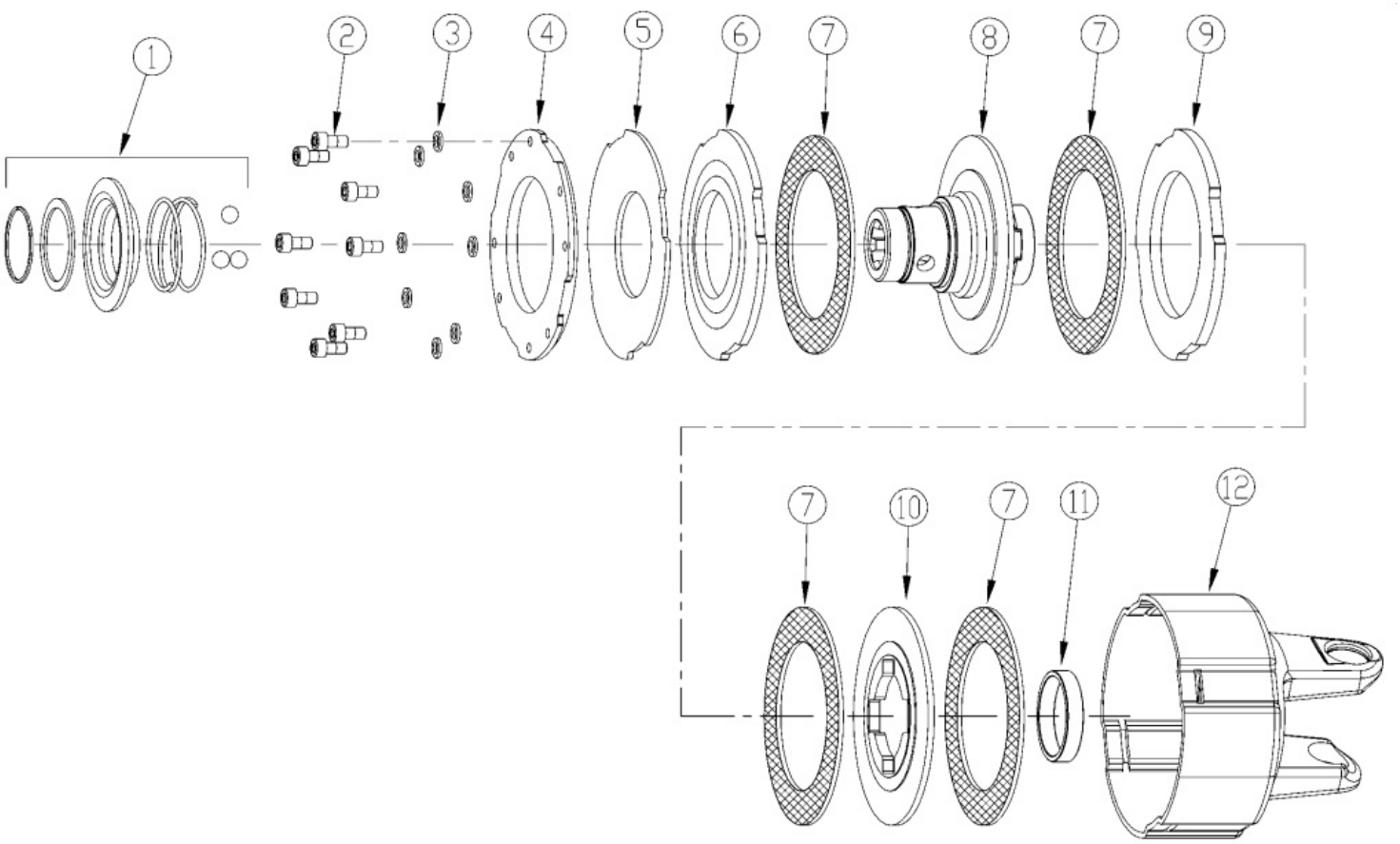

Driveline Slip Clutch (1466707) Eurocaran

Applies to Models: AFM4216

Ref.	Part No.	Part Description	Comments
	DWG30917	Drawing Image Number	
	1466707	EC BD4/6 1600NM PULL EVOLUTION *	
1	1004227	EC PULL COLLAR KIT EVOLUTION	
2	6040818	EC SCREW M8X18 (GRADE 10.9)	
3	6402901	EC WASHER 8.5X14X2	
4	1134012	EC CLOSURE FLANGE	
5	1216914	EC SPRING (R1300NM)	
6	1134011	EC PRESSURE FLANGE	
7	1806010	EC FRICTION DISC	
8	1706085	EC HUB WITH FLANGE 1.38-6	
9	1136008	EC INT. FLANGE	
10	1136010	EC HUB DISC	
11	1705009	EC CLUTCH BUSHING	
12	1466001	EC OUTER BODY FOR BD4/6	

Belt Drive Center and Right Hand Deck

Applies to Models: AFM4216

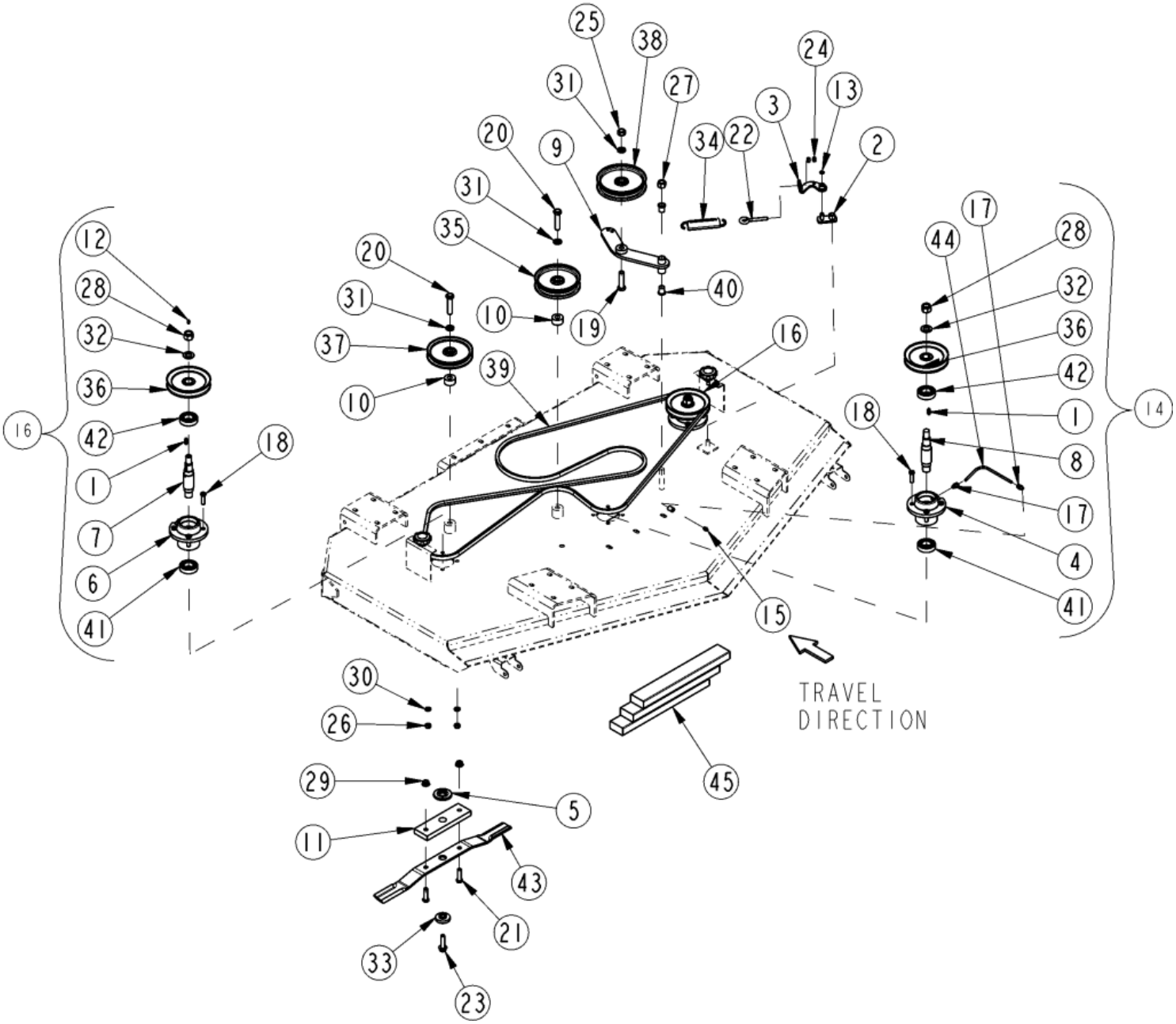

Belt Drive Center and Right Hand Deck

Applies to Models: AFM4216

Ref.	Part No.	Part Description	Comments
	DWG25932	Drawing Image Number	
1	172-242D	1/4 SQ. KEY X 7/8 LG	
2	310-094H	OVER-CENTER LATCH-90	locking assembly order 357-446s
3	310-095H	CW SPRING EYE-BOLT BRACKET	locking assembly order 357-446s
4	310-224D	BLADE HUB - MACH	
5	310-227D	BLADE WASHER-90	
6	310-457D	BLADE HUB MACHINED TOP GREASE	
7	310-631D	BLADE SPINDLE SHAFT CCW TG	
8	310-636D	BLADE SPINDLE SHAFT CCW	
9	315-199H	CCW BELT TAKE-UP HANDLE	
10	315-563D	IDLER PULLEY SPACER-SHORT	
11	315-751D	4016 L.H. THREAD BLADE BAR	
12	800-001C	GREASE ZERK STRAIGHT 1/4-28	
13	800-099C	SNAP RING EXT 7/16	
14	315-381S	CCW SPIN. ASSY 6" COM. UNIT	
15	800-130C	GREASE ZERK STRAIGHT 1/8-27NPT	
16	315-613S	CCW TG SPNDL HUB ASSY 6 PULLEY	
17	800-372C	FTG TUBE, PUSH CONNECT 1/8NPT	
18	802-229C	HHCS 7/16-20X1 1/2 GR8	
19	802-239C	HHCS 5/8-18X2 1/2 GR5	
20	802-281C	HHCS 5/8-11X2 3/4 GR5	
21	802-329C	HHCS 1/2-20X1 3/4 GR5	
22	802-567C	SP EYE 3/8-16X 3 7/8	
23	802-696C	HFS 1/2-20X2 LH GR8	
24	803-014C	NUT HEX 3/8-16 PLT	
25	803-022C	NUT HEX 5/8-18 PLT	
26	803-115C	NUT HEX 7/16-20 PLT	
27	803-119C	NUT LOCK 5/8-18 NYLOK COLLAR P	
28	803-228C	NUT HEX 3/4-16LH NYLOC COLLAR	
29	803-308C	NUT HEX FLG/LK 1/2-20 PLT GR G	
30	804-014C	WASHER LOCK 7/16 PLT	
31	804-022C	WASHER LOCK SPRING 5/8 PLT	
32	804-093C	WASHER FLAT 3/4 HARD ASTMF436	
33	804-110C	WASHER BLADE 2ODX.56THKX.51ID	
34	807-068C	SPRING EXT BELT HANDLE	
35	808-073C	FLAT IDLE PULLEY 6 1/4 O.D.	
36	808-127C	B-GROOVE DRIVE PULLEY 6 O.D.	
37	808-128C	B-GROOVE IDLER PULLEY 6.25 OD	
38	808-129C	FLAT IDLER PULLEY 6 3/4 OD	
39	816-141C	V-BELT B173 175.9 E.L. KEVLAR	
40	817-028C	DOUBLE DISK ARM PIVOT BUSHINGS	
41	822-006C	BRG BALL 30IDX62OD 206	
42	822-161C	BRG 1.18IDX2.44OD 6206 W/SHLD	
43	890-366C	MWR BLD 5/16 X 25 SD LL CCW	Standard Low Lift Blades 3 per Deck
43	890-367C	MWR BLD 1/4 X 25 SD HL CCW	Optional High Lift Blades 3 per Deck
43	890-319C	MWR BLD 1/4 X 25SD ML CCW	Optional Medium Lift Blades 3 per Deck
43	890-699C	MWR BLD MULCH 1/4X25SD CCW	Optional Mulch Blades 3 per Deck
44	990-109R	TUBE NYLON 1/4OD X 062WL	
45	315-259A	AFM 16FT MWR BLD KIT-LL	Service Kit 3 CW Blades & 6 CCW Blades
45	315-260A	AFM 16FT MWR BLD KIT-ML	Service Kit 3 CW Blades & 6 CCW Blades

Belt Drive Center and Right Hand Deck

This Page Intentionally Left Blank

Belt Drive Center and Right Hand Deck

Ref.	Part No.	Part Description	Comments
45	315-261A	AFM 16FT MWR BLD KIT-HL	Service Kit 3 CW Blades & 6 CCW Blades
45	315-468A	AFM 16FT MULCH MWR BLD KIT	Service Kit 3 CW Blades & 6 CCW Blades

Belt Drive Left Hand Deck

Applies to Models: AFM4216

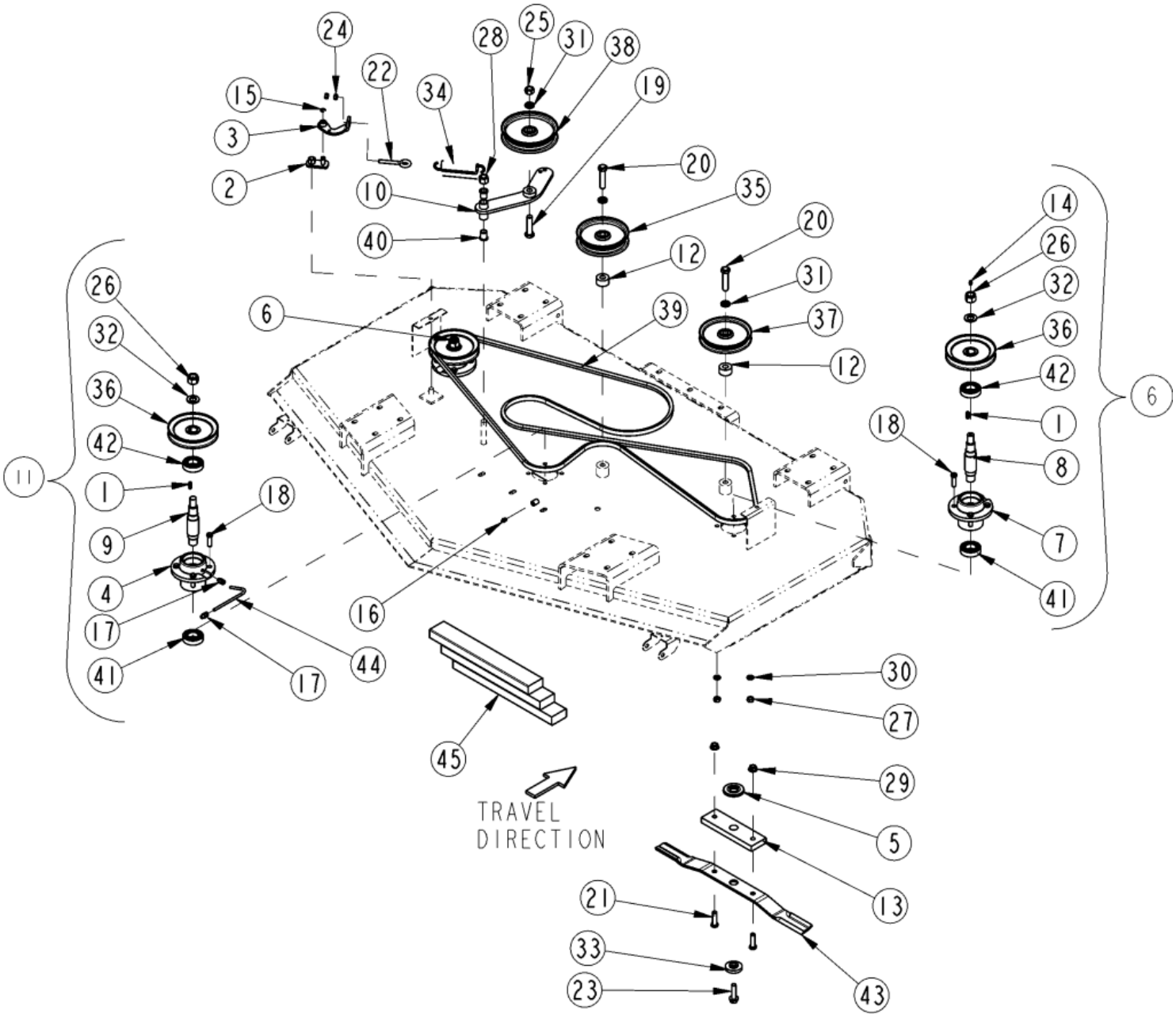

Belt Drive Left Hand Deck

Applies to Models: AFM4216

Ref.	Part No.	Part Description	Comments
	DWG25933	Drawing Image Number	
1	172-242D	1/4 SQ. KEY X 7/8 LG	
2	310-094H	OVER-CENTER LATCH-90	locking assembly order 357-446s
3	310-095H	CW SPRING EYE-BOLT BRACKET	locking assembly order 357-446s
4	310-224D	BLADE HUB - MACH	
5	310-227D	BLADE WASHER-90	
6	310-261S	CW TG SPINDLE HUB ASSY 6" PULL	
7	310-457D	BLADE HUB MACHINED TOP GREASE	
8	310-630D	BLADE SPINDLE SHAFT CW TG	
9	310-637D	BLADE SPINDLE SHAFT CW	
10	315-103H	CW BELT TAKE-UP HANDLE	
11	315-380S	CW SPIN. ASSY 6" COM. UNIT	
12	315-563D	IDLER PULLEY SPACER-SHORT	
13	315-752D	4016 R.H. THREAD BLADE BAR	
14	800-001C	GREASE ZERK STRAIGHT 1/4-28	
15	800-099C	SNAP RING EXT 7/16	
16	800-130C	GREASE ZERK STRAIGHT 1/8-27NPT	
17	800-372C	FTG TUBE, PUSH CONNECT 1/8NPT	
18	802-229C	HHCS 7/16-20X1 1/2 GR8	
19	802-239C	HHCS 5/8-18X2 1/2 GR5	
20	802-281C	HHCS 5/8-11X2 3/4 GR5	
21	802-329C	HHCS 1/2-20X1 3/4 GR5	
22	802-567C	SP EYE 3/8-16X 3 7/8	
23	802-695C	HFS 1/2-20X2 GR8	
24	803-014C	NUT HEX 3/8-16 PLT	
25	803-022C	NUT HEX 5/8-18 PLT	
26	803-114C	NUT LOCK 3/4-16 NYLOC COLLAR	
27	803-115C	NUT HEX 7/16-20 PLT	
28	803-119C	NUT LOCK 5/8-18 NYLOK COLLAR P	
29	803-308C	NUT HEX FLG/LK 1/2-20 PLT GR G	
30	804-014C	WASHER LOCK 7/16 PLT	
31	804-022C	WASHER LOCK SPRING 5/8 PLT	
32	804-093C	WASHER FLAT 3/4 HARD ASTMF436	
33	804-110C	WASHER BLADE 2ODX.56THKX.51ID	
34	807-068C	SPRING EXT BELT HANDLE	
35	808-073C	FLAT IDLE PULLEY 6 1/4 O.D.	
36	808-127C	B-GROOVE DRIVE PULLEY 6 O.D.	
37	808-128C	B-GROOVE IDLER PULLEY 6.25 OD	
38	808-129C	FLAT IDLER PULLEY 6 3/4 OD	
39	816-141C	V-BELT B173 175.9 E.L. KEVLAR	
40	817-028C	DOUBLE DISK ARM PIVOT BUSHINGS	
41	822-006C	BRG BALL 30IDX62OD 206	
42	822-161C	BRG 1.18IDX2.44OD 6206 W/SHLD	
43	890-200C	MWR BLD 5/16 X 25SD LL CW	Standard Low Lift Blades 3 per Deck
43	890-172C	MWR BLD 1/4 X 25SD HL CW	Optional High Lift Blades 3 per Deck
43	890-318C	MWR BLD 1/4 X 25SD ML CW	Optional Medium Lift Blades 3 per Deck
43	890-698C	MWR BLD MULCH 1/4X25SD CW	Optional Mulch Blades 3 per Deck
44	990-109R	TUBE NYLON 1/4OD X 062WL	
45	315-259A	AFM 16FT MWR BLD KIT-LL	Service Kit 3 CW Blades & 6 CCW Blades
45	315-260A	AFM 16FT MWR BLD KIT-ML	Service Kit 3 CW Blades & 6 CCW Blades

Belt Drive Left Hand Deck

This Page Intentionally Left Blank

Belt Drive Left Hand Deck

Ref.	Part No.	Part Description	Comments
45	315-261A	AFM 16FT MWR BLD KIT-HL	Service Kit 3 CW Blades & 6 CCW Blades
45	315-468A	AFM 16FT MULCH MWR BLD KIT	Service Kit 3 CW Blades & 6 CCW Blades

Channel Center Deck

Applies to Models: AFM4216

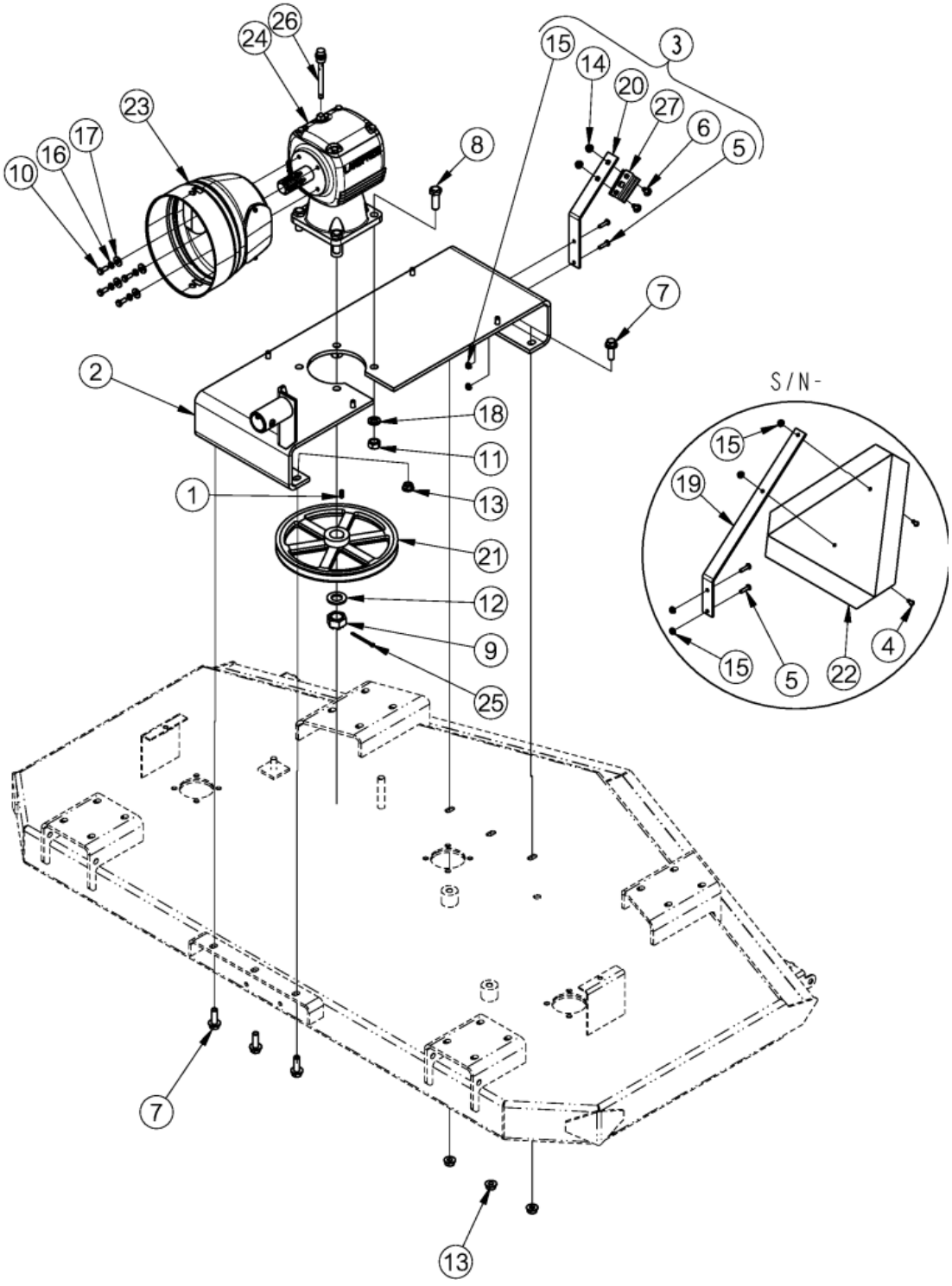

Channel Center Deck

Applies to Models: AFM4216

Ref.	Part No.	Part Description	Comments
	DWG 25934	Drawing Image Number	
1	310-331D	KEY 1/4 X 11/16 LONG	
2	315-697H	16' CENTER GEAR BOX CHANNEL	
2	315-697H81	16' CENTER GB CHANNEL GREEN	
2	315-697H82	16' CENTER GB CHANNEL ORNG	
2	315-697H83	16' CENTER GB CHANNEL RED	
2	315-697H84	16' CENTER GB CHANNEL BLUE	Obsolete
3	315-743V	SMV SIGN MOUNT	S/N 1067444+
4	801-018C	SCREW RD HD 1/4-20 X 5/8	S/N 1067443-
5	802-005C	HHCS 1/4-20X1 GR5	
6	802-092C	RHSNB 5/16-18X3/4 GR5	S/N 1067444+
7	802-203C	HFSS 1/2-13X1 1/2 GR5	
8	802-246C	HHCS 5/8-18X1 3/4 GR5	
9	8.2.2.01144	NUT CASTLE M 24 X 2	
10	802-314C	HHCS M8X1.25X20 GR8.8	S/N 1965270+
11	803-022C	NUT HEX 5/8-18 PLT	
12	8.3.2.00409	CO FLAT WASHER 25 X 44 X 4	
13	803-037C	NUT HEX WHIZ 1/2-13 PLT GR5	
14	803-043C	NUT HEX WHIZ 5/16-18 PLT	S/N 1067444+
15	803-293C	NUT HEX FLG TL 1/4-20 ZNYCR	
16	804-009C	WASHER LOCK SPRING 5/16 PLT	S/N 1965270+
17	804-010C	WASHER FLAT 5/16 USS PLT	S/N 1965270+
18	804-022C	WASHER LOCK SPRING 5/8 PLT	
19	807-176C	SMV MOUNT BAR SPRING STEEL	S/N 1067443-
20	807-364C	SMV MOUNT SPRING STEEL - SHORT	S/N 1067444+
21	808-335C	B-GROOVE PULLEY 11" CAST-IRON	
22	818-055C	DECAL SLOW MOVING-GALV. BACKED	S/N 1067443-
23	826-240C	SMALL SHFT CONE W ACCESS DOOR	S/N 1965270+
24	826-327C	GBOX MOWER 50 HP 1:2.8 CCW	
25	826-487C	COMER 8.4.7.00516 COTTER	
26	826-488C	COMER U0.195.7101.00 DIPSTICK	
27	890-401C	SMV MOUNTING SOCKET	S/N 1067444+

Channel Left Hand Deck

Applies to Models: AFM4216

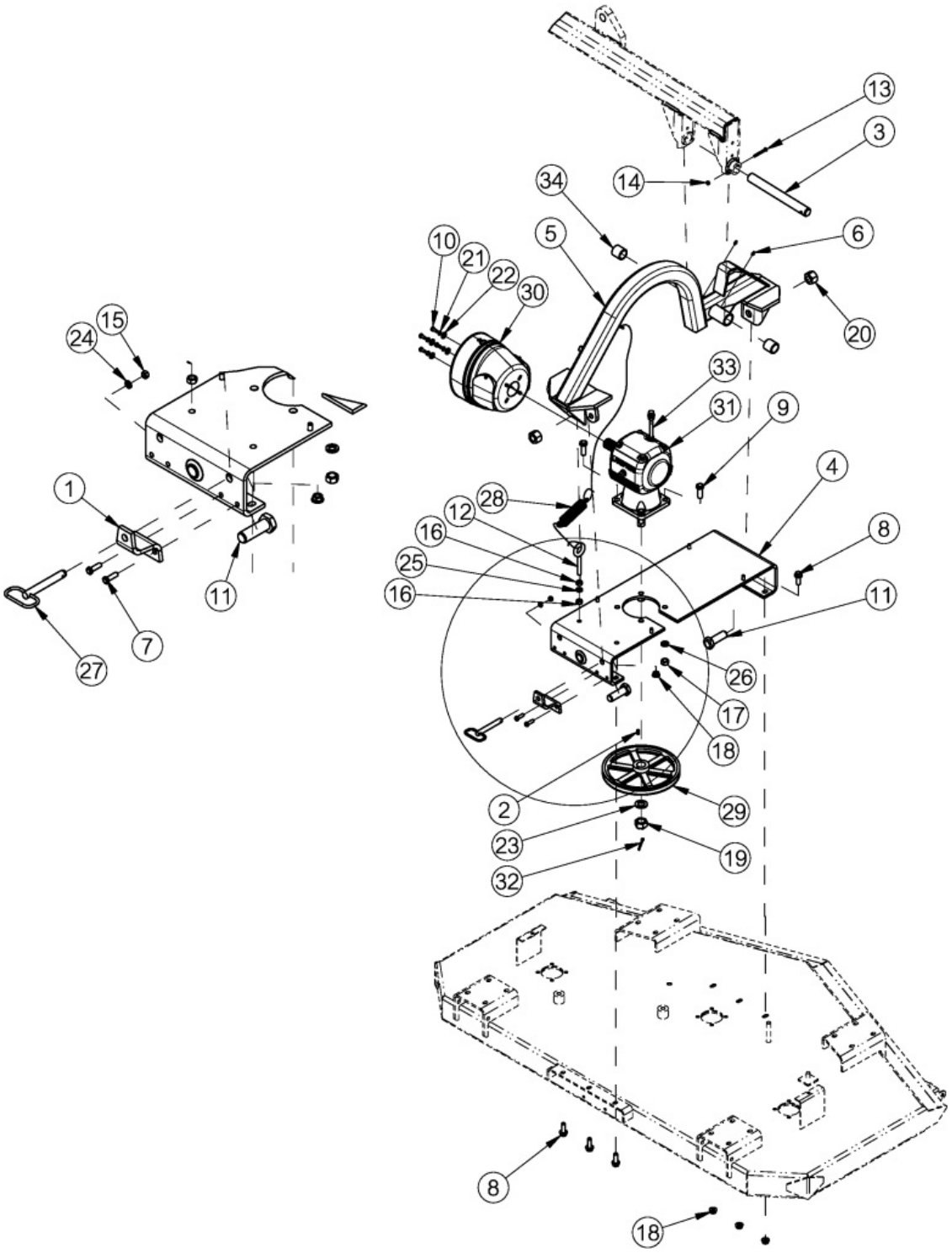

Channel Left Hand Deck

Applies to Models: AFM4216

Ref.	Part No.	Part Description	Comments
	DWG 25935	Drawing Image Number	
1	308-049D	GW LINK MOUNT BRACKET	
1	308-049D81	GW LINK MOUNT BRACKET GREEN	
1	308-049D82	GW LINK MOUNT BRACKET ORANGE	
1	308-049D83	GW LINK MOUNT BRACKET RED	
1	308-049D84	GW LINK MOUNT BRACKET BLUE	
2	310-331D	KEY 1/4 X 11/16 LONG	
3	315-566D	40200 FLEX ARM PIVOT PIN	
4	315-696H	16' WING GEAR BOX CHANNEL	
4	315-696H81	16' WING GB CHANNEL GREEN	
4	315-696H82	16' WING GB CHANNEL ORNG	
4	315-696H83	16' WING GB CHANNEL RED	
4	315-696H84	16' WING GB CHANNEL BLUE	Obsolete
5	315-698H	16' FLEX ARM	
6	800-001C	GREASE ZERK STRAIGHT 1/4-28	S/N 1126297+
6	800-080C	GREASE ZERK 1/4-28 THD FORMING	S/N 1126296-
7	802-079C	HHCS 3/8-16X1 1/4 GR5	
8	802-203C	HFSS 1/2-13X1 1/2 GR5	
9	802-246C	HHCS 5/8-18X1 3/4 GR5	
10	802-314C	HHCS M8X1.25X20 GR8.8	S/N 1965270+
11	802-345C	HHCS 1-8X3 GR8	
12	802-408C	SP EYE 1/2-13X3 FTHD	
13	802-551C	HHCS 1/4-20X2 1/4 GR5	
14	803-007C	NUT LOCK 1/4-20 PLT	
15	803-014C	NUT HEX 3/8-16 PLT	
16	803-020C	NUT HEX 1/2-13 PLT	
17	803-022C	NUT HEX 5/8-18 PLT	
18	803-037C	NUT HEX WHIZ 1/2-13 PLT GR5	
19	8.2.2.01144	NUT CASTLE M 24 X 2	
20	803-038C	NUT HEX 1-8 NYLON INSERT PLT	
21	804-009C	WASHER LOCK SPRING 5/16 PLT	S/N 1965270+
22	804-010C	WASHER FLAT 5/16 USS PLT	S/N 1965270+
23	8.3.2.00409	CO FLAT WASHER 25 X 44 X 4	
24	804-013C	WASHER LOCK SPRING 3/8 PLT	
25	804-015C	WASHER LOCK SPRING 1/2 PLT	
26	804-022C	WASHER LOCK SPRING 5/8 PLT	
27	805-175C	PIN HTCH DTNT .63X3.75 USBL	
28	807-050C	SPRING EXT 1 13/32 X 6 EXT	
29	808-335C	B-GROOVE PULLEY 11" CAST-IRON	
30	826-240C	SMALL SHFT CONE W ACCESS DOOR	S/N 1965270+
31	826-326C	GBOX MOWER 50 HP 1:2.8 CW	
32	826-487C	COMER 8.4.7.00516 COTTER	
33	826-488C	COMER U0.195.7101.00 DIPSTICK	
34	890-122C	BUSHING 1 1/2 X 1 1/4 X 1 1/2	

Channel Right Hand Deck

Applies to Models: AFM4216

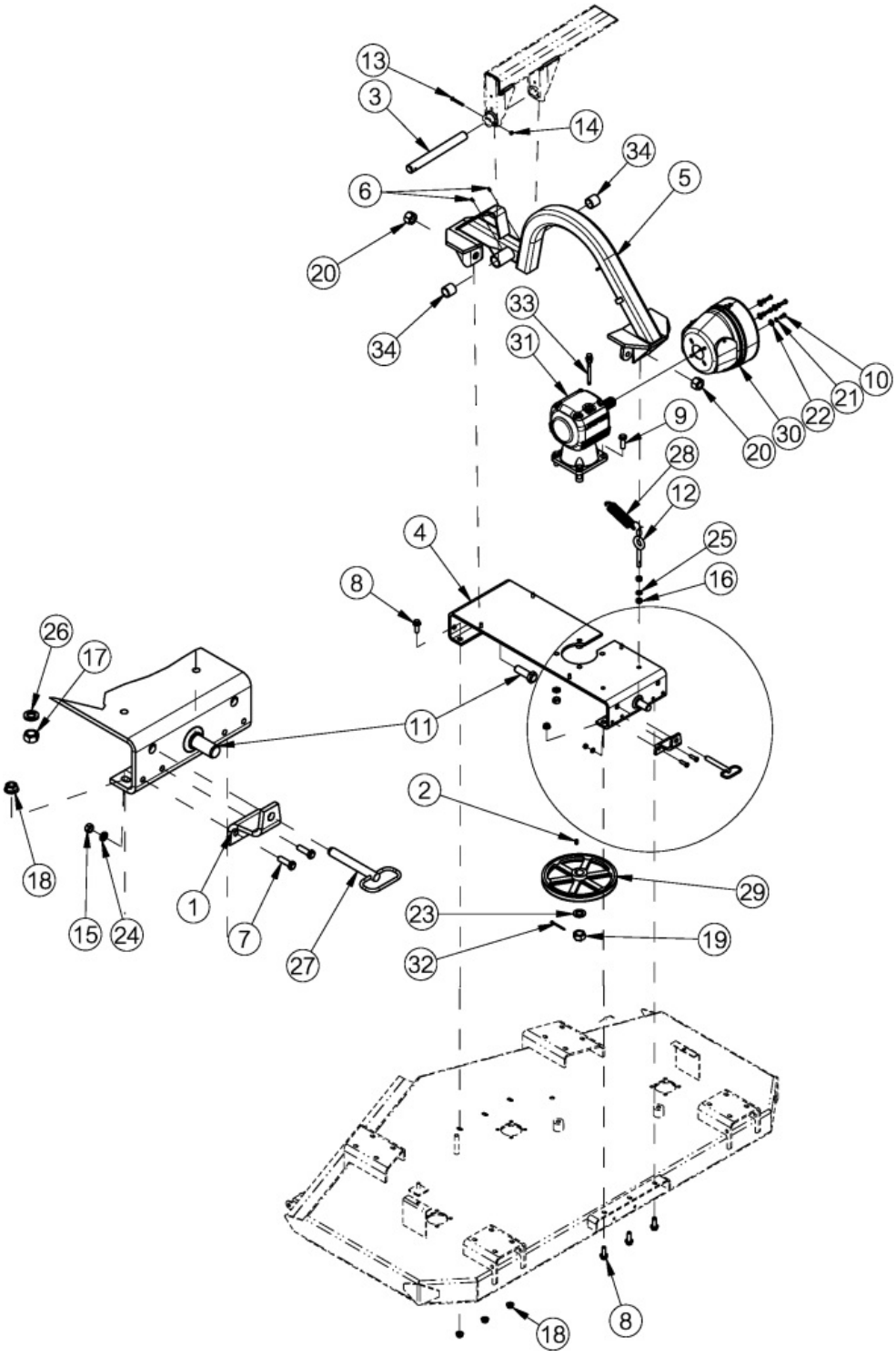

Channel Right Hand Deck

Applies to Models: AFM4216

Ref.	Part No.	Part Description	Comments
	DWG 25936	Drawing Image Number	
1	308-049D	GW LINK MOUNT BRACKET	
1	308-049D81	GW LINK MOUNT BRACKET GREEN	
1	308-049D82	GW LINK MOUNT BRACKET ORANGE	
1	308-049D83	GW LINK MOUNT BRACKET RED	
1	308-049D84	GW LINK MOUNT BRACKET BLUE	
2	310-331D	KEY 1/4 X 11/16 LONG	
3	315-566D	40200 FLEX ARM PIVOT PIN	
4	315-696H	16' WING GEAR BOX CHANNEL	
4	315-696H81	16' WING GB CHANNEL GREEN	
4	315-696H82	16' WING GB CHANNEL ORNG	
4	315-696H83	16' WING GB CHANNEL RED	
4	315-696H84	16' WING GB CHANNEL BLUE	Obsolete
5	315-698H	16' FLEX ARM	
6	800-001C	GREASE ZERK STRAIGHT 1/4-28	S/N 1126297+
6	800-080C	GREASE ZERK 1/4-28 THD FORMING	S/N 1126296-
7	802-079C	HHCS 3/8-16X1 1/4 GR5	
8	802-203C	HFSS 1/2-13X1 1/2 GR5	
9	802-246C	HHCS 5/8-18X1 3/4 GR5	
10	802-314C	HHCS M8X1.25X20 GR8.8	S/N 1965270+
11	802-345C	HHCS 1-8X3 GR8	
12	802-408C	SP EYE 1/2-13X3 FTHD	
13	802-551C	HHCS 1/4-20X2 1/4 GR5	
14	803-007C	NUT LOCK 1/4-20 PLT	
15	803-014C	NUT HEX 3/8-16 PLT	
16	803-020C	NUT HEX 1/2-13 PLT	
17	803-022C	NUT HEX 5/8-18 PLT	
18	803-037C	NUT HEX WHIZ 1/2-13 PLT GR5	
19	8.2.2.01144	NUT CASTLE M 24 X 2	
20	803-038C	NUT HEX 1-8 NYLON INSERT PLT	
21	804-009C	WASHER LOCK SPRING 5/16 PLT	S/N 1965270+
22	804-010C	WASHER FLAT 5/16 USS PLT	S/N 1965270+
23	8.3.2.00409	CO FLAT WASHER 25 X 44 X 4	
24	804-013C	WASHER LOCK SPRING 3/8 PLT	
25	804-015C	WASHER LOCK SPRING 1/2 PLT	
26	804-022C	WASHER LOCK SPRING 5/8 PLT	
27	805-175C	PIN HTCH DTNT .63X3.75 USBL	
28	807-050C	SPRING EXT 1 13/32 X 6 EXT	
29	808-335C	B-GROOVE PULLEY 11" CAST-IRON	
30	826-240C	SMALL SHFT CONE W ACCESS DOOR	S/N 1965270+
31	826-327C	GBOX MOWER 50 HP 1:2.8 CCW	
32	826-487C	COMER 8.4.7.00516 COTTER	
33	826-488C	COMER U0.195.7101.00 DIPSTICK	
34	890-122C	BUSHING 1 1/2 X 1 1/4 X 1 1/2	

Deck and Roller

Applies to Models: AFM4216

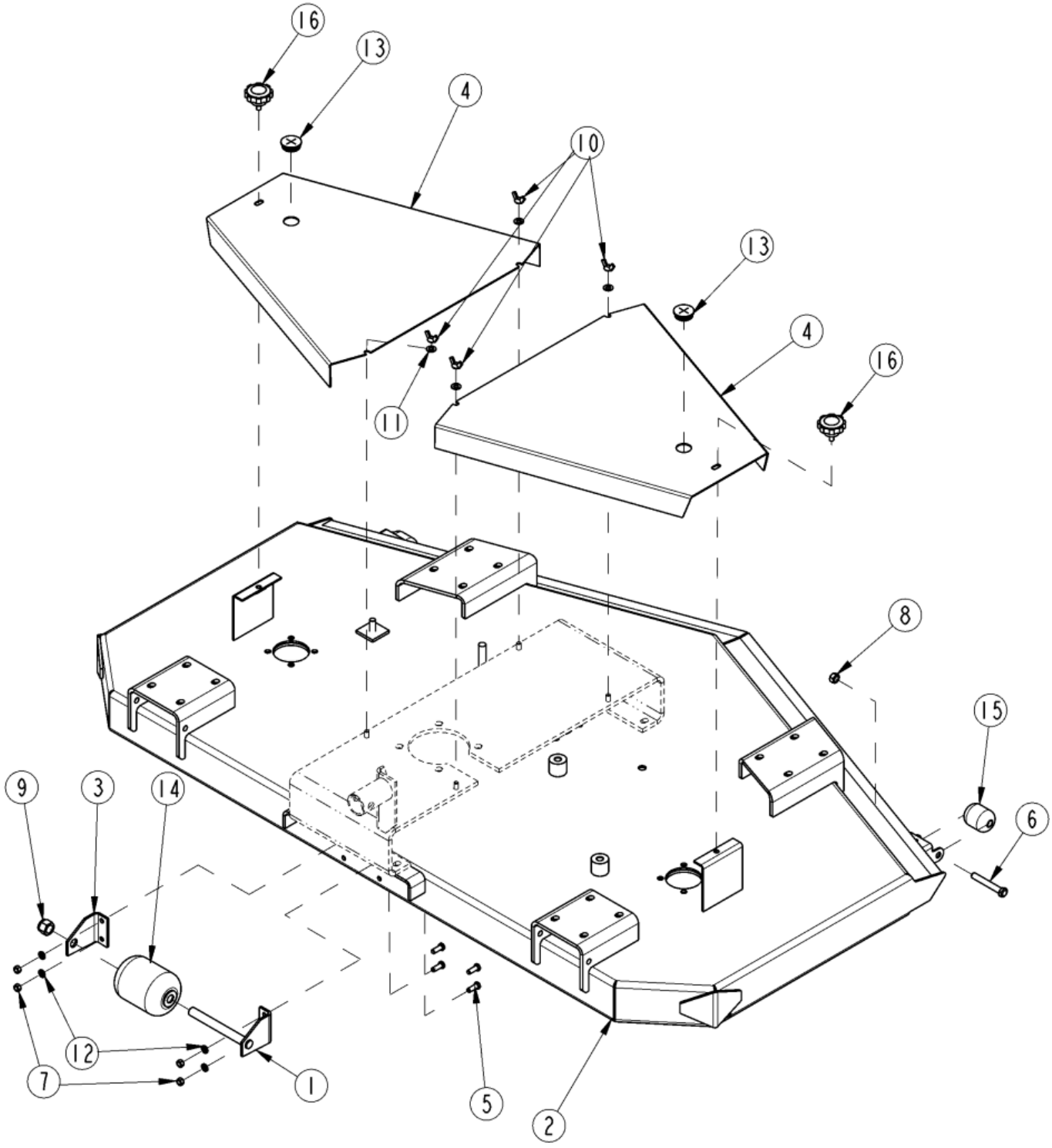

Deck and Roller

Applies to Models: AFM4216

Ref.	Part No.	Part Description	Comments
	DWG25937	Drawing Image Number	
1	315-676H	FRONT ROLLER BRKT	
2	315-689H	AFM 16' DECK RH	
2	315-689H81	AFM 16' DECK RH GREEN	
2	315-689H82	AFM 16' DECK RH ORNG	
2	315-689H83	AFM 16' DECK RH RED	
2	315-689H84	AFM 16' DECK RH BLUE	Obsolete
2	315-688H	AFM 16' DECK LH	
2	315-688H81	AFM 16' DECK LH GREEN	
2	315-688H82	AFM 16' DECK LH ORNG	
2	315-688H83	AFM 16' DECK LH RED	
2	315-688H84	AFM 16' DECK LH BLUE	Obsolete
3	315-963D	FRONT ROLLER MOUNT - RH	
4	315-982D	16' BELT GUARD	
5	802-017C	HHCS 3/8-16X1 GR5	
6	802-041C	HHCS 1/2-13X3 1/2 GR5	
7	803-014C	NUT HEX 3/8-16 PLT	
8	803-019C	NUT LOCK 1/2-13 PLT	
9	803-114C	NUT LOCK 3/4-16 NYLOC COLLAR	
10	803-231C	NUT WING 3/8-16 PLT	
11	804-012C	WASHER FLAT 3/8 SAE PLT	
12	804-013C	WASHER LOCK SPRING 3/8 PLT	
13	816-298C	RUBBER PLUG 1 3/8 W/CROSS SLIT	
14	817-082C	4 X 5 1/2 FRONT ROLLER	
15	817-195C	ROLLER ANTI-SCALP 2 OD	
16	817-358C	KNOB 3/8-16 MALE THD 2 3/8OD	S/N 63938+
16	817-259C	KNOB 3/8-16 FEMALE THD 2 3/8OD	S/N 63937-

AFM Light Kit S/N 1522478-

Applies to Models: AFM4216

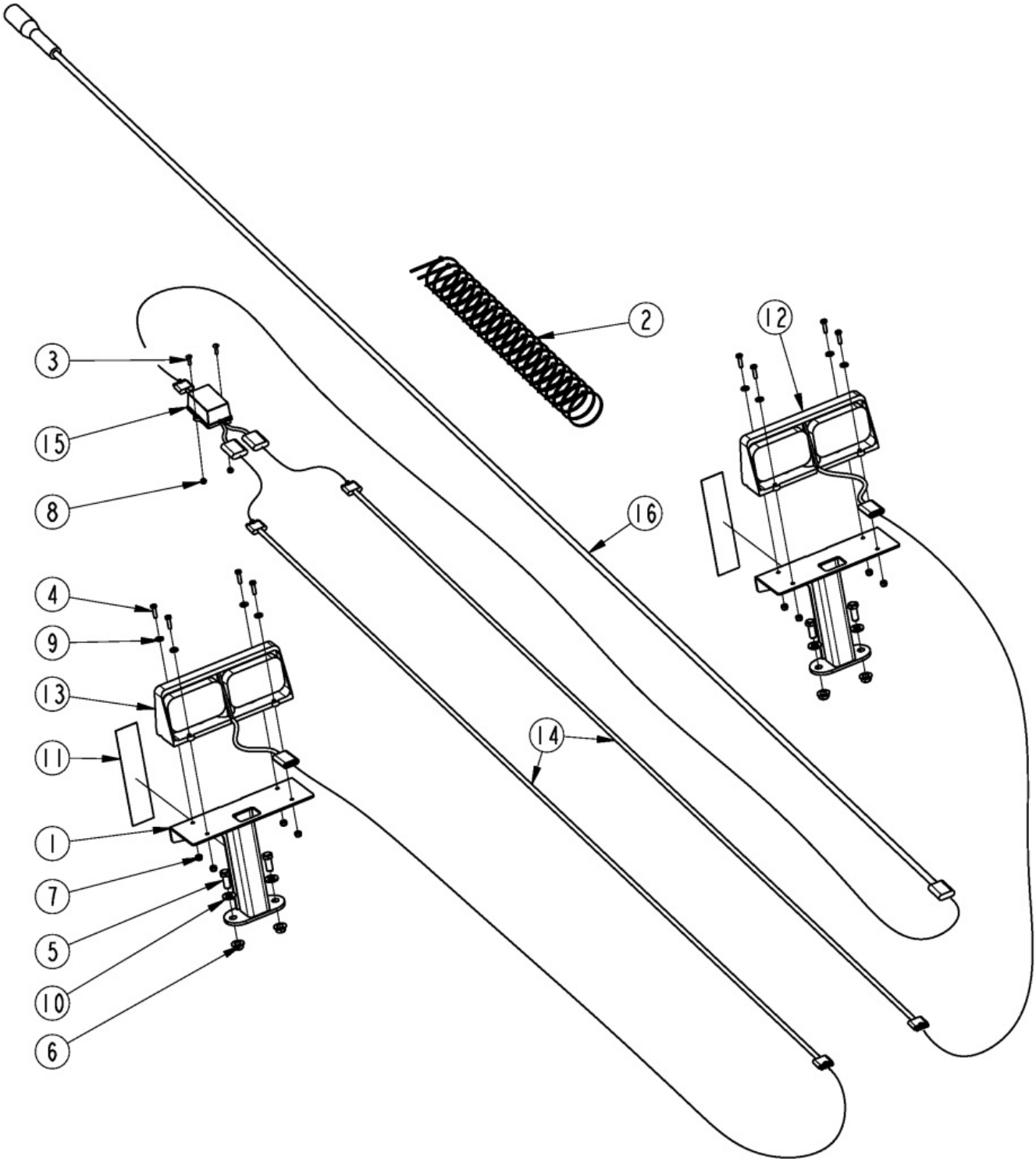

AFM Light Kit S/N 1522478-

Applies to Models: AFM4216

Ref.	Part No.	Part Description	Comments
	DWG 70100	Image No.	
	315-788L	AFM LIGHT KIT	S/N 1522478-
		*	
1	315-787H	LIGHT MOUNT	
2	800-060C	CABLE TIE .19X14.25 3DIA 50LB	
3	801-021C	SCREW RD HD 10-24 X 3/4 PLT	
4	802-005C	HHCS 1/4-20X1 GR5	
5	802-034C	HHCS 1/2-13X1 1/4 GR5	S/N _____+
5	802-091C	HHCS 1/2-13X1 1/2 GR5	S/N _____-
6	803-169C	NUT HEX FLG LOCK 1/2-13 PLT	
7	803-255C	NUT HEX NYLOCK 1/4-20	
8	803-268C	NUT HEX NYLOCK 10-24 PLT	
9	804-007C	WASHER FLAT 1/4 SAE PLT	
10	804-016C	WASHER FLAT 1/2 SAE PLT	S/N _____+
11	838-614C	DECAL REFLECTOR RED 2X9	
12	891-522C	DUAL LED LIGHT LH	Complete light assembly
12	J-37-R	RED LED LENS MODULE	Red lens
12	J-37-A	AMBER LED LENS MODULE	Amber lens
12	J-AC1-15-B	BLACK LENS COVER	Black lens
13	891-523C	DUAL LED LIGHT RH	Complete light assembly
13	J-37-R	RED LED LENS MODULE	Red lens
13	J-37-A	AMBER LED LENS MODULE	Amber lens
13	J-AC1-15-B	BLACK LENS COVER	Black lens
14	891-529C	LIGHT WIRE HARNESS 8'	
15	891-531C	ENHANCE MODULE	
16	891-533C	LEAD WIRE HARNESS 13'	

AFM Light Kit S/N 1522479+

Applies to Models: AFM4216

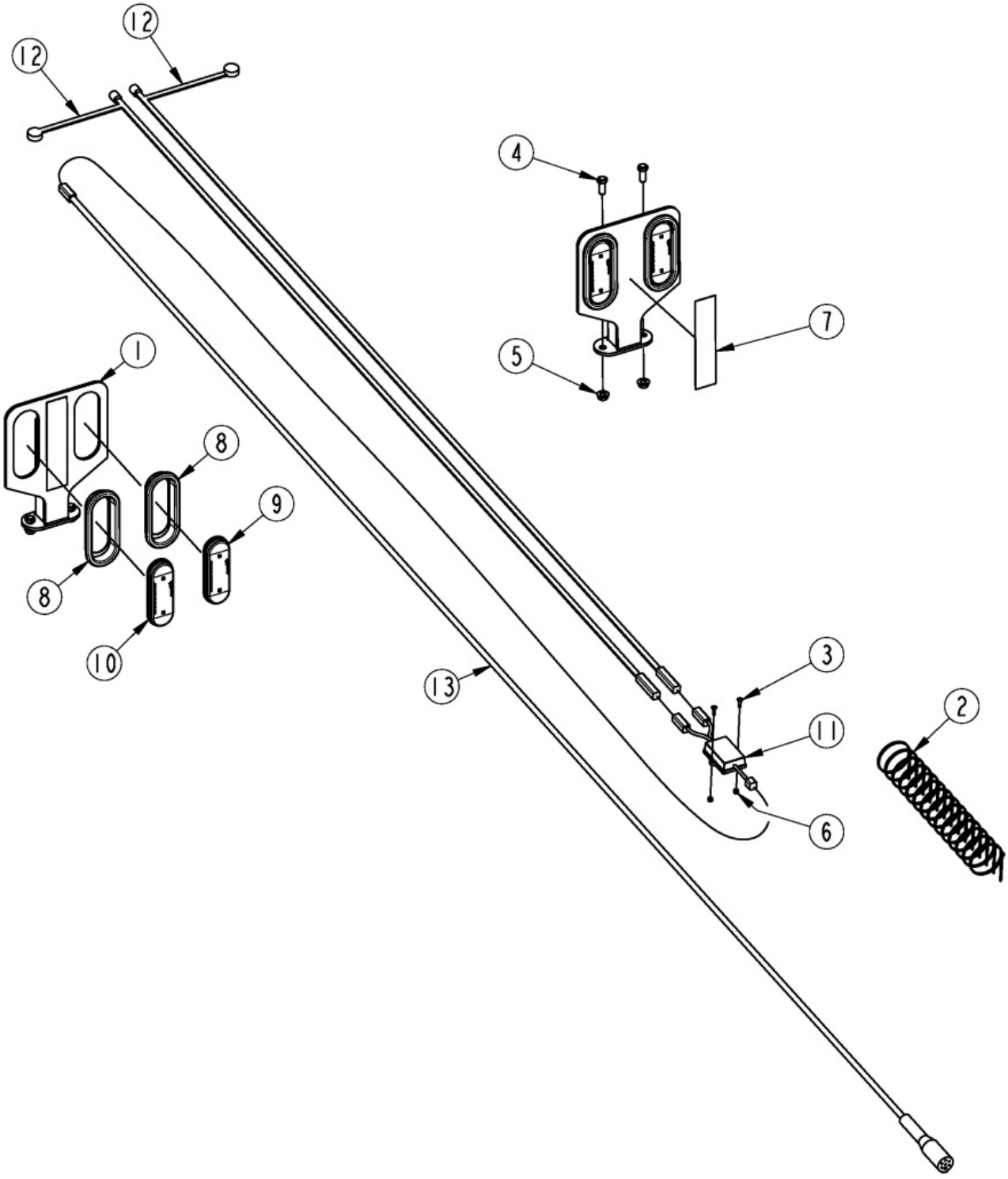

AFM Light Kit S/N 1522479+

Applies to Models: AFM4216

Ref.	Part No.	Part Description	Comments
	DWG 72684	Image No.	
	315-803L	AFM LIGHT KIT	S/N 1522479+
		*	
1	315-802H	LIGHT MOUNT	
2	800-060C	CABLE TIE .19X14.25 3DIA 50LB	
3	801-021C	SCREW RD HD 10-24 X 3/4 PLT	
4	802-034C	HHCS 1/2-13X1 1/4 GR5	
5	803-169C	NUT HEX FLG LOCK 1/2-13 PLT	
6	803-268C	NUT HEX NYLOCK 10-24 PLT	
7	838-614C	DECAL REFLECTOR RED 2X9	
8	843-159C	LIGHT GROMMET 2.5 X 6.75	
9	843-208C	RED OVAL LED LIGHT	
10	843-209C	AMBER OVAL LED LIGHT	
11	843-211C	ENHANCE MODULE	
12	843-234C	LIGHT HARNESS, 96"	
13	843-236C	LEAD WIRE HARNESS 13'	

Gauge Wheel (15" Dia) Center Deck

Applies to Models: AFM4216

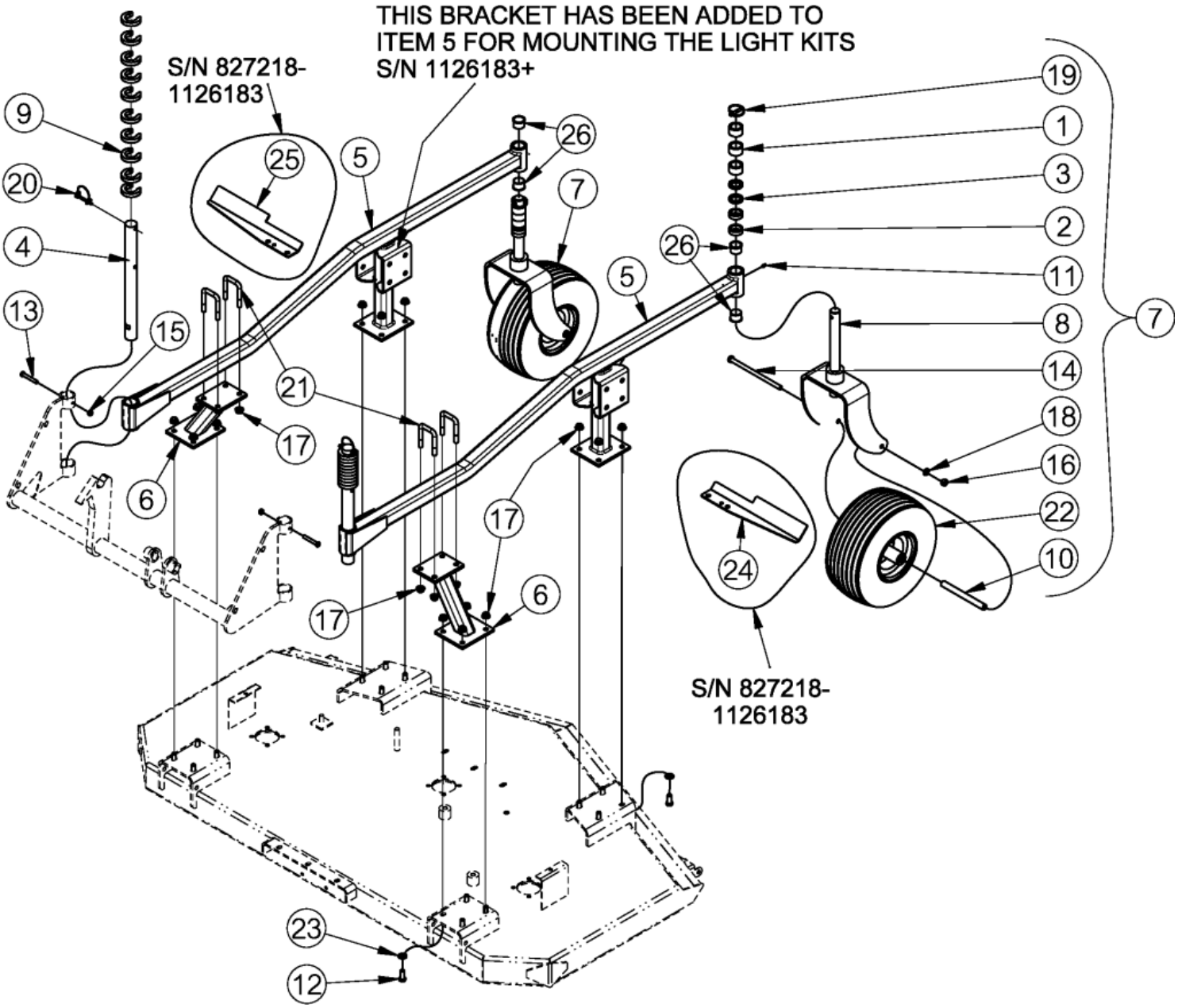

Gauge Wheel (15" Dia) Center Deck

Applies to Models: AFM4216

Ref.	Part No.	Part Description	Comments
	DWG 25938	Drawing Image Number	
1	310-251D	G.W. SPACER 1	
2	310-252D	G.W. SPACER 1/2	
3	310-359D	GW SPACER 1/4	
4	315-237D	AFM4014/16 CARRIER ROD 1 1/2OD	
5	315-619H	CENTER DECK CARRIER 16 - 18"	S/N 1126461+
5	315-619H81	CENTER DECK CARRIER GREEN	S/N 1126461+
5	315-619H82	CENTER DECK CARRIER ORANGE	S/N 1126461+
5	315-619H83	CENTER DECK CARRIER RED	S/N 1126461+
5	315-619H84	CENTER DECK CARRIER BLUE	Obsolete
5	315-717H	CENTER DECK CARRIER - 15"	(S/N 112646D-) Light kit bracket added at S/N 1126183+
5	315-717H81	CNTR DECK CARRIER - 15" GREEN	(S/N 112646D-) Light kit bracket added at S/N 1126183+
5	315-717H83	CNTR DECK CARRIER - 15" RED	(S/N 112646D-) Light kit bracket added at S/N 1126183+
5	315-717H84	CNTR DECK CARRIER - 15" BLUE	Obsolete
5	315-717H82	CNTR DECK CARRIER - 15" ORANGE	(S/N 112646D-) Light kit bracket added at S/N 1126183+
6	315-620H	STAND-OFF CENTER DECK CARRIER	
6	315-620H81	STND-OFF CNTR DCK CARRIER GRN	
6	315-620H82	STND-OFF CNTR DCK CARRIER ORNG	
6	315-620H83	STND-OFF CNTR DCK CARRIER RED	
6	315-620H84	STND-OFF CNTR DCK CARRIER BLUE	Obsolete
7	315-702S	CASTER G.W. 15" ASSY	S/N 1126380+
7	315-707S	CASTER G.W. 15" SHORT	S/N 1126460-
8	315-703H	CASTER G.W. YOKE 15"	S/N 1126380+
8	315-708H	CASTER G.W. YOKE 15" SHORT	S/N 1126460-
9	315-733D	C SPACER COLLAR 1/2X1 17/32 ID	
10	357-487D	TUBE,CASTER WHEEL AXLE	
11	800-001C	GREASE ZERK STRAIGHT 1/4-28	
12	802-034C	HHCS 1/2-13X1 1/4 GR5	S/N 1126380+
12	802-091C	HHCS 1/2-13X1 1/2 GR5	S/N 1126379-
13	802-114C	HHCS 3/8-16X2 1/2 GR5	
14	802-269C	HHCS 1/2-13X9 GR5	
15	803-013C	NUT LOCK 3/8-16 PLT	
16	803-020C	NUT HEX 1/2-13 PLT	
17	803-169C	NUT HEX FLG LOCK 1/2-13 PLT	
18	804-015C	WASHER LOCK SPRING 1/2 PLT	
19	805-015C	PIN LINCH 5/16 X 1 3/4	
20	805-065C	PIN WIRE RETAINING 1/4 X 1 3/4	
21	806-023C	U-BOLT 1/2-13 X 2 1/32 X 3 1/4	
22	814-357C	TIRE/WHL, 15X6.00-6NHS 4PR RIB	
23	804-016C	WASHER FLAT 1/2 SAE PLT	
24	332-016D	LH BRKT REFLECTOR	S/N 827218 to S/N 1126183
25	332-017D	RH BRKT REFLECTOR	S/N 827218 to S/N 1126183
26	890-202C	GAUGE WHEEL SFT PIVOT BUSHING	

Gauge Wheel (15" Dia.) Left & Right Deck S/N 923214-

Applies to Models: AFM4216

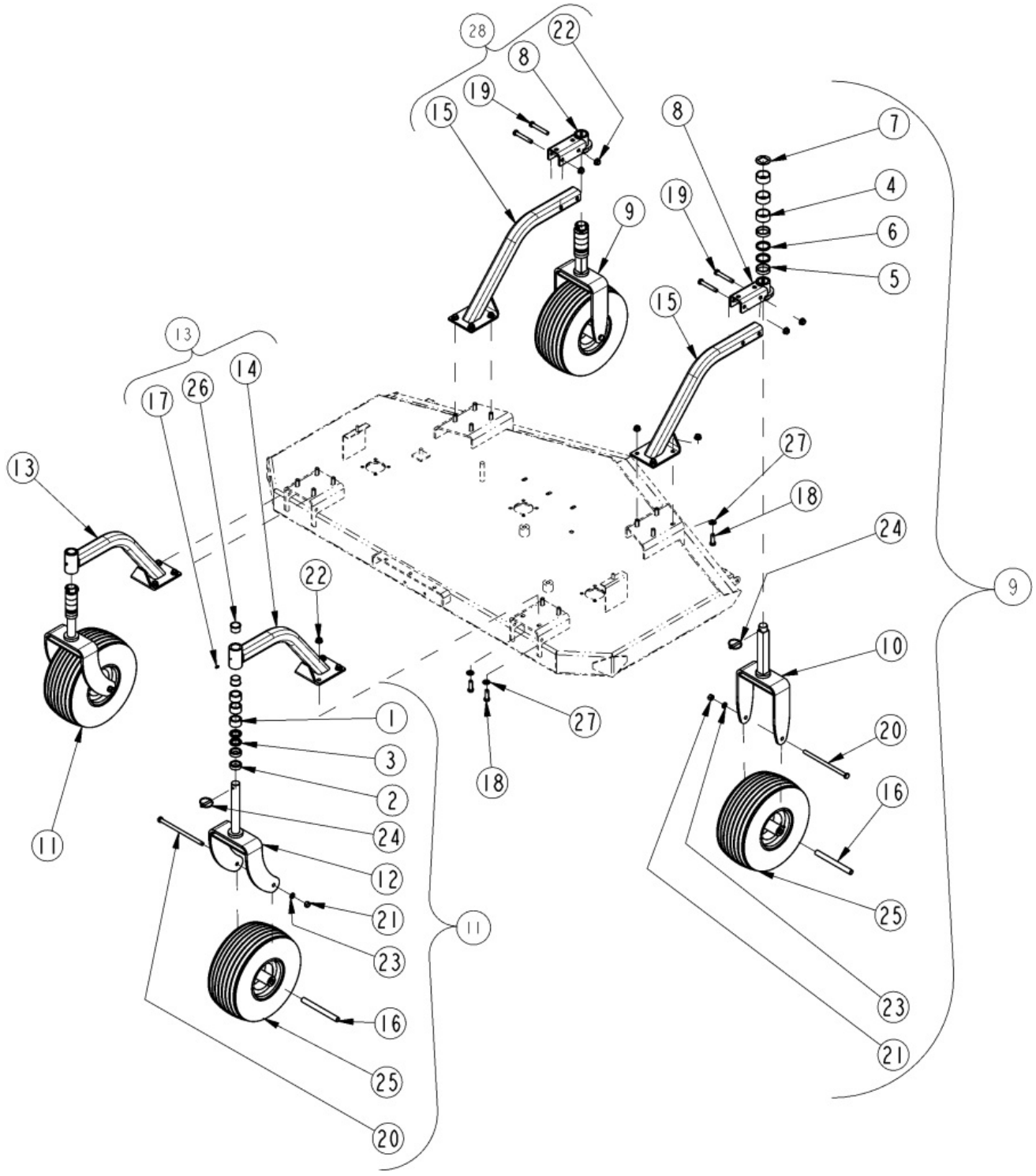

Gauge Wheel (15" Dia.) Left & Right Deck S/N 923214-

Applies to Models: AFM4216

Ref.	Part No.	Part Description	Comments
	DWG25939	Drawing Image Number	
1	310-251D	G.W. SPACER 1	
2	310-252D	G.W. SPACER 1/2	
3	310-359D	GW SPACER 1/4	
4	315-245D	1 1/4 SQ BAR SPACER 1 LG	
5	315-246D	1 1/4 SQ BAR SPACER 1/2 LG	
6	315-247D	1 1/4 SQ BAR SPACER 1/4 LG	
7	315-248D	1 1/4 SQ BAR TOP CAP	
8	315-648H	NONCASTER BOLT-ON MOUNT	
8	315-648H81	MOUNT NONCASTER BOLT-ON GREEN	
8	315-648H82	MOUNT NONCASTER BOLT-ON ORANGE	
8	315-648H83	MOUNT NONCASTER BOLT-ON RED	
8	315-648H84	MOUNT NONCASTER BOLT-ON BLUE	Obsolete
9	315-705S	NONCASTER G.W 15" SHORT	
10	315-706H	NONCASTER G.W. YOKE 15" SHORT	
11	315-707S	CASTER G.W. 15" SHORT	
12	315-708H	CASTER G.W. YOKE 15" SHORT	
13	315-709S	CASTER ARM 14 & 16 AFM 15"	
13	315-709S81	CASTER ARM 14&16 AFM15" GREEN	
13	315-709S82	CASTER ARM 14&16 AFM15" ORANGE	
13	315-709S83	CASTER ARM 14&16 AFM15" RED	
13	315-709S84	CASTER ARM 14&16 AFM15" BLUE	Obsolete
14	315-710H	CASTER ARM 14 & 16 AFM 15"	
14	315-710H81	CASTER ARM 14&16 AFM GREEN	
14	315-710H82	CASTER ARM 14&16 AFM ORANGE	
14	315-710H83	CASTER ARM 14&16 AFM RED	
14	315-710H84	CASTER ARM 14&16 AFM BLUE	Obsolete
15	315-712H	NONCASTER ARM 14 & 16 AFM 15"	
15	315-712H81	NONCASTER ARM 14&16 AFM GREEN	
15	315-712H82	NONCASTER ARM 14&16 AFM ORANGE	
15	315-712H83	NONCASTER ARM 14&16 AFM RED	
15	315-712H84	NONCASTER ARM 14&16 AFM BLUE	Obsolete
16	357-487D	TUBE,CASTER WHEEL AXLE	
17	800-001C	GREASE ZERK STRAIGHT 1/4-28	
18	802-091C	HHCS 1/2-13X1 1/2 GR5	
19	802-099C	HHCS 1/2-13X3 1/4 GR5	
20	802-269C	HHCS 1/2-13X9 GR5	
21	803-020C	NUT HEX 1/2-13 PLT	
22	803-169C	NUT HEX FLG LOCK 1/2-13 PLT	
23	804-015C	WASHER LOCK SPRING 1/2 PLT	
24	805-015C	PIN LINCH 5/16 X 1 3/4	
25	814-357C	TIRE/WHL, 15X6.00-6NHS 4PR RIB	
26	890-202C	GAUGE WHEEL SFT PIVOT BUSHING	
27	804-016C	WASHER FLAT 1/2 SAE PLT	
28	315-711S	NONCASTER ARM 14 & 16 AFM 15"	
28	315-711S81	NONCASTER 15" ARM 14-16 GREEN	
28	315-711S82	NONCASTER 15 ARM 14-16 ORANGE	
28	315-711S83	NONCASTER 15 ARM 14-16 RED	
28	315-711S84	NONCASTER 15 ARM 14-16 BLUE	Obsolete

Gauge Wheel (15" Dia.) Left & Right Deck S/N 923215+

Applies to Models: AFM4216

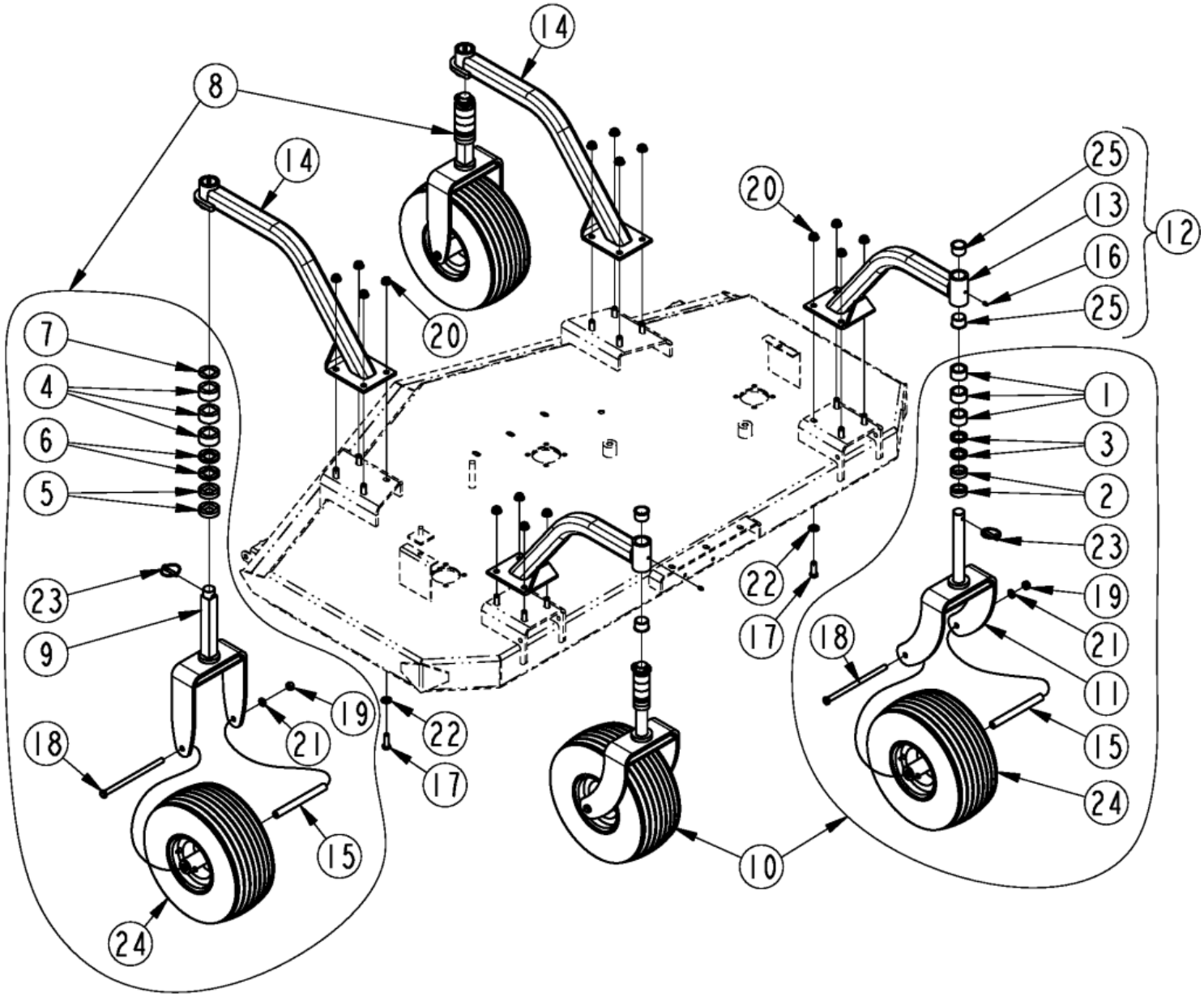

Gauge Wheel (15" Dia.) Left & Right Deck S/N 923215+

Applies to Models: AFM4216

Ref.	Part No.	Part Description	Comments
	DWG 37440	Image No.	
1	310-251D	G.W. SPACER 1	
2	310-252D	G.W. SPACER 1/2	
3	310-359D	GW SPACER 1/4	
4	315-245D	1 1/4 SQ BAR SPACER 1 LG	
5	315-246D	1 1/4 SQ BAR SPACER 1/2 LG	
6	315-247D	1 1/4 SQ BAR SPACER 1/4 LG	
7	315-248D	1 1/4 SQ BAR TOP CAP	
8	315-668S	NONCASTER G.W. 15" ASSY	S/N 1126461+
8	315-705S	NONCASTER G.W 15" SHORT	S/N 1126460-
9	315-701H	NONCASTER G.W. YOKE 15"	S/N 1126461+
9	315-706H	NONCASTER G.W. YOKE 15" SHORT	S/N 1126460-
10	315-702S	CASTER G.W. 15" ASSY	S/N 1126461+
10	315-707S	CASTER G.W. 15" SHORT	S/N 1126460-
11	315-703H	CASTER G.W. YOKE 15"	S/N 1126461+
11	315-708H	CASTER G.W. YOKE 15" SHORT	S/N 1126460-
12	315-616S	CASTER ARM 14 & 16 AFM ASSY	S/N 1126461+
12	315-616S81	CASTER ARM 14&16 AFM ASY GREEN	S/N 1126461+
12	315-616S82	CASTER ARM 14&16 AFM ASY ORNG	S/N 1126461+
12	315-616S83	CASTER ARM 14&16 AFM ASY RED	S/N 1126461+
12	315-616S84	CASTER ARM 14&16 AFM ASY BLUE	Obsolete
12	315-709S	CASTER ARM 14 & 16 AFM 15"	S/N 1126460-
12	315-709S81	CASTER ARM 14&16 AFM15" GREEN	S/N 1126460-
12	315-709S82	CASTER ARM 14&16 AFM15" ORANGE	S/N 1126460-
12	315-709S83	CASTER ARM 14&16 AFM15" RED	S/N 1126460-
12	315-709S84	CASTER ARM 14&16 AFM15" BLUE	Obsolete
13	315-615H	CASTER ARM 14&16 AFM 18"	S/N 1126461+
13	315-615H81	CASTER ARM 14&16 AFM GREEN	S/N 1126461+
13	315-615H82	CASTER ARM 14&16 AFM ORANGE	S/N 1126461+
13	315-615H83	CASTER ARM 14&16 AFM RED	S/N 1126461+
13	315-615H84	CASTER ARM 14&16 AFM BLUE	Obsolete
13	315-710H	CASTER ARM 14 & 16 AFM 15"	S/N 1126460-
13	315-710H81	CASTER ARM 14&16 AFM GREEN	S/N 1126460-
13	315-710H82	CASTER ARM 14&16 AFM ORANGE	S/N 1126460-
13	315-710H83	CASTER ARM 14&16 AFM RED	S/N 1126460-
13	315-710H84	CASTER ARM 14&16 AFM BLUE	Obsolete
14	315-737H	NON CASTER ARM WLDMT STRAIGHT	S/N 1126461+
14	315-737H81	NON CSTER ARM WLD STGHT GREEN	S/N 1126461+
14	315-737H82	NON CASTER ARM WMT STRGHT ORNG	S/N 1126461+
14	315-737H83	NON CSTER ARM WLD STGHT RED	S/N 1126461+
14	315-737H84	NON CSTER ARM WLD STGHT BLUE	Obsolete
14	315-740H	NON CSTR ARM WLD STGHT 15"TIRE	S/N 1126460-
14	315-740H81	NON CSTR ARM STGHT 15"T GREEN	S/N 1126460-
14	315-740H82	NON CSTR ARM STGHT 15"T ORANGE	S/N 1126460-
14	315-740H83	NON CSTR ARM STGHT 15"T RED	S/N 1126460-
14	315-740H84	NON CSTR ARM STGHT 15"T BLUE	Obsolete
15	357-487D	TUBE,CASTER WHEEL AXLE	
16	800-001C	GREASE ZERK STRAIGHT 1/4-28	
17	802-034C	HHCS 1/2-13X1 1/4 GR5	S/N 1126380+
17	802-091C	HHCS 1/2-13X1 1/2 GR5	S/N 1126379-

Gauge Wheel (15" Dia.) Left & Right Deck S/N 923215+

This Page Intentionally Left Blank

Gauge Wheel (15" Dia.) Left & Right Deck S/N 923215+

Ref.	Part No.	Part Description	Comments
18	802-269C	HHCS 1/2-13X9 GR5	
19	803-020C	NUT HEX 1/2-13 PLT	
20	803-169C	NUT HEX FLG LOCK 1/2-13 PLT	
21	804-015C	WASHER LOCK SPRING 1/2 PLT	
22	804-016C	WASHER FLAT 1/2 SAE PLT	
23	805-015C	PIN LINCH 5/16 X 1 3/4	
24	814-357C	TIRE/WHL, 15X6.00-6NHS 4PR RIB	
25	890-202C	GAUGE WHEEL SFT PIVOT BUSHING	

Gauge Wheel (18" Dia.) Center Deck

Applies to Models: AFM4216

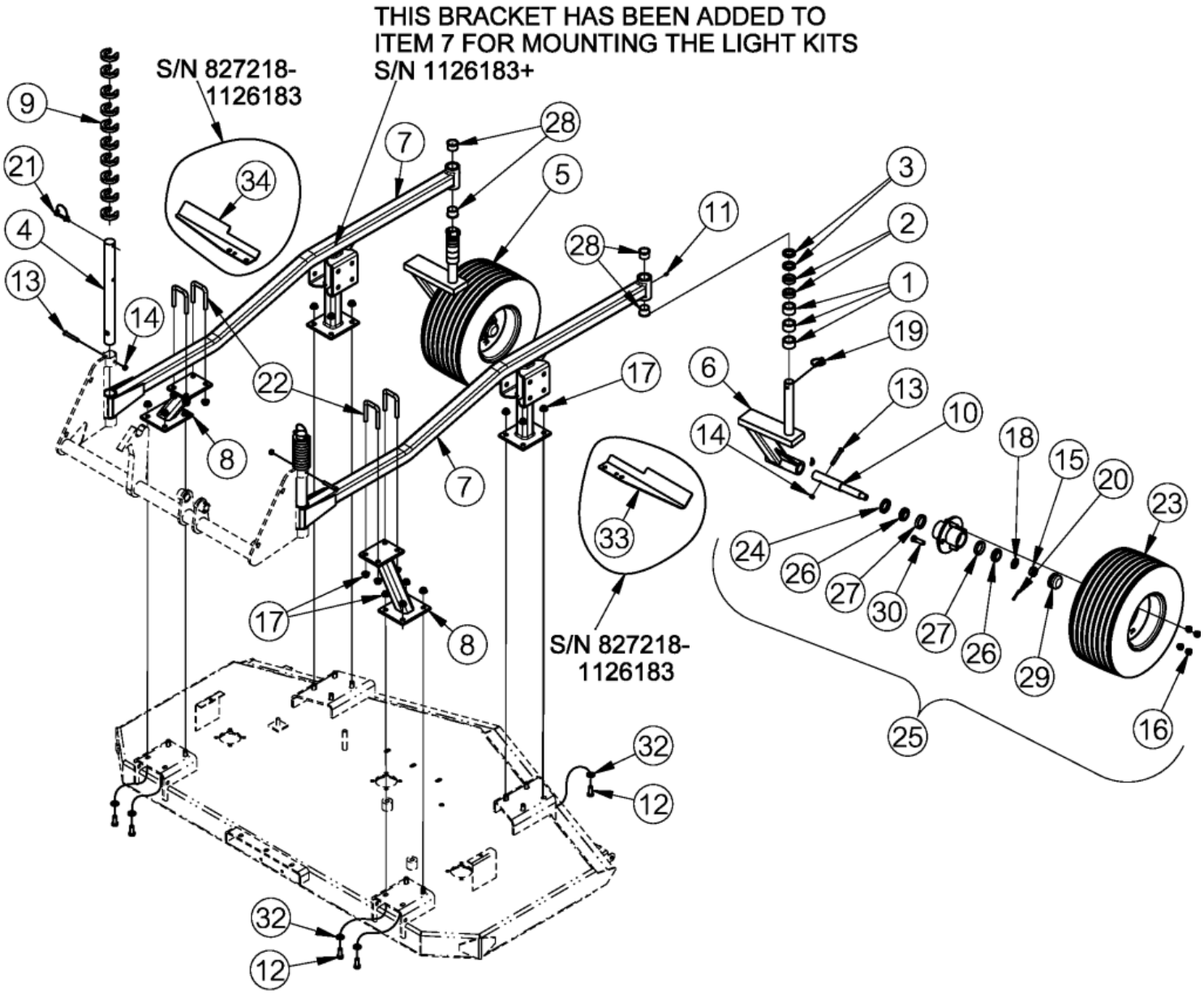

Gauge Wheel (18" Dia.) Center Deck

Applies to Models: AFM4216

Ref.	Part No.	Part Description	Comments
	DWG 25940	Drawing Image Number	
1	310-251D	G.W. SPACER 1	
2	310-252D	G.W. SPACER 1/2	
3	310-359D	GW SPACER 1/4	
4	315-237D	AFM4014/16 CARRIER ROD 1 1/2OD	
5	315-343S	CASTER G.W. YOKE,18" TIRE ASSY	
6	315-384H	CASTERED G.W. YOKE 18"	
7	315-619H	CENTER DECK CARRIER 16 - 18"	Light kit bracket added at S/N 1126183+
7	315-619H81	CENTER DECK CARRIER GREEN	
7	315-619H82	CENTER DECK CARRIER ORANGE	
7	315-619H83	CENTER DECK CARRIER RED	
7	315-619H84	CENTER DECK CARRIER BLUE	Obsolete
8	315-620H	STAND-OFF CENTER DECK CARRIER	
8	315-620H81	STND-OFF CNTR DCK CARRIER GRN	
8	315-620H82	STND-OFF CNTR DCK CARRIER ORNG	
8	315-620H83	STND-OFF CNTR DCK CARRIER RED	
8	315-620H84	STND-OFF CNTR DCK CARRIER BLUE	Obsolete
9	315-733D	C SPACER COLLAR 1/2X1 17/32 ID	
10	315-768D	SPINDLE 1IN	
11	800-001C	GREASE ZERK STRAIGHT 1/4-28	
12	802-034C	HHCS 1/2-13X1 1/4 GR5	S/N 1126380+
12	802-091C	HHCS 1/2-13X1 1/2 GR5	S/N 1126379-
13	802-114C	HHCS 3/8-16X2 1/2 GR5	
14	803-013C	NUT LOCK 3/8-16 PLT	
15	803-053C	NUT HEX SLOTTED 3/4-16	
16	803-159C	NUT LUG 1/2-20X60DEG PLT(.75AF	
17	803-169C	NUT HEX FLG LOCK 1/2-13 PLT	
18	804-025C	WASHER FLAT 3/4 SAE PLT	
19	805-015C	PIN LINCH 5/16 X 1 3/4	
20	805-045C	PIN COTTER 5/32 X 1 1/4 LG	
21	805-065C	PIN WIRE RETAINING 1/4 X 1 3/4	
22	806-023C	U-BOLT 1/2-13 X 2 1/32 X 3 1/4	
23	814-118C	TIRE/WHL 18X9.50-8 4PLY RIBBED	Rib Tread: S/N 1012421+
23	814-408C	TIRE/WHL 18X9.50-8 4PLY TURF	Turf Tread: S/N 1012420-
24	816-014C	TINE GAUGE WHEEL HUB SEAL	
25	815-104C	HUB 4-BOLT W/ZERK COMPLETE	
26	822-030C	BRG CONE 1.00ID L44643	
27	822-080C	BRG CUP 1.98OD L44610	
28	890-202C	GAUGE WHEEL SFT PIVOT BUSHING	
29	890-614C	GREASE CAP #1505	
30	BO-47	NEILSON STUD 1/2-20UNFX1 13/16	
32	804-016C	WASHER FLAT 1/2 SAE PLT	
33	332-016D	LH BRKT REFLECTOR	S/N 827218 to S/N 1126183
34	332-017D	RH BRKT REFLECTOR	S/N 827218 to S/N 1126183

Gauge Wheel (18" Dia.) Left & Right Deck S/N 923214-

Applies to Models: AFM4216

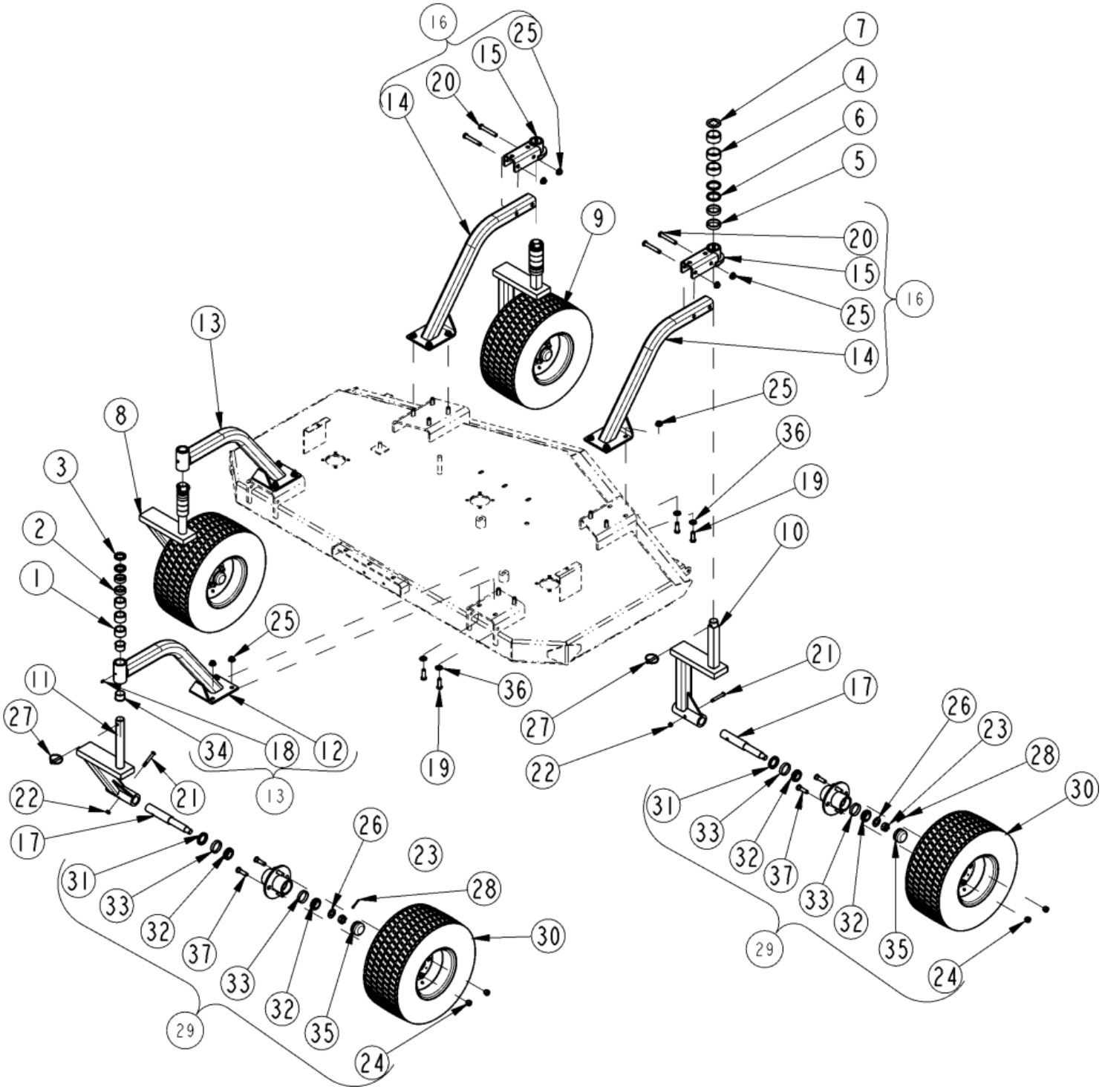

Gauge Wheel (18" Dia.) Left & Right Deck S/N 923214-

Applies to Models: AFM4216

Ref.	Part No.	Part Description	Comments
	DWG25941	Drawing Image Number	
1	310-251D	G.W. SPACER 1	
2	310-252D	G.W. SPACER 1/2	
3	310-359D	GW SPACER 1/4	
4	315-245D	1 1/4 SQ BAR SPACER 1 LG	
5	315-246D	1 1/4 SQ BAR SPACER 1/2 LG	
6	315-247D	1 1/4 SQ BAR SPACER 1/4 LG	
7	315-248D	1 1/4 SQ BAR TOP CAP	
8	315-343S	CASTER G.W. YOKE,18" TIRE ASSY	
9	315-344S	NONCASTER G.W. YOKE,18"TR ASSY	
10	315-383H	NON-CASTERED YOKE 18"	
11	315-384H	CASTERED G.W. YOKE 18"	
12	315-615H	CASTER ARM 14&16 AFM 18"	
12	315-615H81	CASTER ARM 14&16 AFM GREEN	
12	315-615H82	CASTER ARM 14&16 AFM ORANGE	
12	315-615H83	CASTER ARM 14&16 AFM RED	
12	315-615H84	CASTER ARM 14&16 AFM BLUE	Obsolete
13	315-616S	CASTER ARM 14 & 16 AFM ASSY	
13	315-616S81	CASTER ARM 14&16 AFM ASY GREEN	
13	315-616S82	CASTER ARM 14&16 AFM ASY ORNG	
13	315-616S83	CASTER ARM 14&16 AFM ASY RED	
13	315-616S84	CASTER ARM 14&16 AFM ASY BLUE	Obsolete
14	315-618H	NONCASTER ARM 14 & 16 AFM 18"	
14	315-618H81	NONCASTER ARM AFM 16 GREEN	
14	315-618H82	NONCASTER ARM AFM 16 ORANGE	
14	315-618H83	NONCASTER ARM AFM 16 RED	
14	315-618H84	NONCASTER ARM AFM 16 BLUE	Obsolete
15	315-648H	NONCASTER BOLT-ON MOUNT	
15	315-648H81	MOUNT NONCASTER BOLT-ON GREEN	
15	315-648H82	MOUNT NONCASTER BOLT-ON ORANGE	
15	315-648H83	MOUNT NONCASTER BOLT-ON RED	
15	315-648H84	MOUNT NONCASTER BOLT-ON BLUE	Obsolete
16	315-649S	NONCASTER ARM AFM 14 & 16	
16	315-649S81	NONCASTER ARM AFM 14-16 GREEN	
16	315-649S82	NONCASTER ARM AFM 14-16 ORANGE	
16	315-649S83	NONCASTER ARM AFM 14-16 RED	
16	315-649S84	NONCASTER ARM AFM 14-16 BLUE	
17	315-768D	SPINDLE 1IN	
18	800-001C	GREASE ZERK STRAIGHT 1/4-28	
19	802-091C	HHCS 1/2-13X1 1/2 GR5	
20	802-099C	HHCS 1/2-13X3 1/4 GR5	
21	802-114C	HHCS 3/8-16X2 1/2 GR5	
22	803-013C	NUT LOCK 3/8-16 PLT	
23	803-053C	NUT HEX SLOTTED 3/4-16	
24	803-159C	NUT LUG 1/2-20X60DEG PLT(.75AF	
25	803-169C	NUT HEX FLG LOCK 1/2-13 PLT	
26	804-025C	WASHER FLAT 3/4 SAE PLT	
27	805-015C	PIN LINCH 5/16 X 1 3/4	
28	805-045C	PIN COTTER 5/32 X 1 1/4 LG	
29	815-104C	HUB 4-BOLT W/ZERK COMPLETE	

Gauge Wheel (18" Dia.) Left & Right Deck S/N 923214-

This Page Intentionally Left Blank

Gauge Wheel (18" Dia.) Left & Right Deck S/N 923214-

Ref.	Part No.	Part Description	Comments
30	814-118C	TIRE/WHL 18X9.50-8 4PLY RIBBED	Rib Tread: S/N 1012421+
30	814-408C	TIRE/WHL 18X9.50-8 4PLY TURF	Turf Tread: S/N 1012420-
31	816-014C	TINE GAUGE WHEEL HUB SEAL	
32	822-030C	BRG CONE 1.00ID L44643	
33	822-080C	BRG CUP 1.98OD L44610	
34	890-202C	GAUGE WHEEL SFT PIVOT BUSHING	
35	890-614C	GREASE CAP #1505	
36	804-016C	WASHER FLAT 1/2 SAE PLT	
37	BO-47	NEILSON STUD 1/2-20UNFX1 13/16	

Gauge Wheel (18" Dia.) Left & Right Deck S/N 923215+

Applies to Models: AFM4216

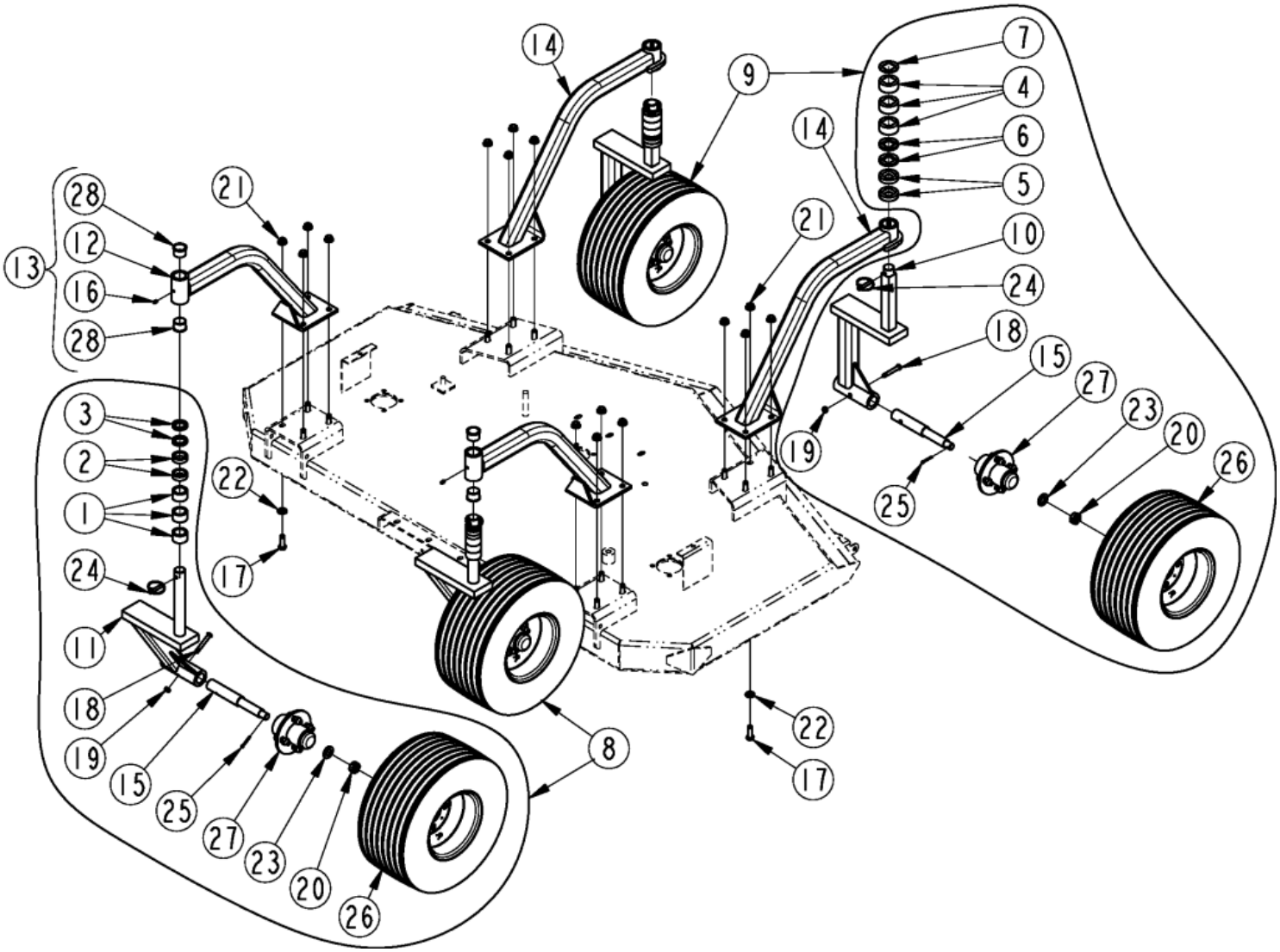

Gauge Wheel (18" Dia.) Left & Right Deck S/N 923215+

Applies to Models: AFM4216

Ref.	Part No.	Part Description	Comments
	DWG 37441	Image Number	
1	310-251D	G.W. SPACER 1	
2	310-252D	G.W. SPACER 1/2	
3	310-359D	GW SPACER 1/4	
4	315-245D	1 1/4 SQ BAR SPACER 1 LG	
5	315-246D	1 1/4 SQ BAR SPACER 1/2 LG	
6	315-247D	1 1/4 SQ BAR SPACER 1/4 LG	
7	315-248D	1 1/4 SQ BAR TOP CAP	
8	315-343S	CASTER G.W. YOKE,18" TIRE ASSY	
9	315-344S	NONCASTER G.W. YOKE,18"TR ASSY	
10	315-383H	NON-CASTERED YOKE 18"	
11	315-384H	CASTERED G.W. YOKE 18"	
12	315-615H	CASTER ARM 14&16 AFM 18"	
12	315-615H81	CASTER ARM 14&16 AFM GREEN	
12	315-615H82	CASTER ARM 14&16 AFM ORANGE	
12	315-615H83	CASTER ARM 14&16 AFM RED	
12	315-615H84	CASTER ARM 14&16 AFM BLUE	Obsolete
13	315-616S	CASTER ARM 14 & 16 AFM ASSY	
13	315-616S81	CASTER ARM 14&16 AFM ASY GREEN	
13	315-616S82	CASTER ARM 14&16 AFM ASY ORNG	
13	315-616S83	CASTER ARM 14&16 AFM ASY RED	
13	315-616S84	CASTER ARM 14&16 AFM ASY BLUE	Obsolete
14	315-737H	NON CASTER ARM WLDMT STRAIGHT	
14	315-737H81	NON CSTER ARM WLD STGHT GREEN	
14	315-737H82	NON CASTER ARM WMT STRGHT ORNG	
14	315-737H83	NON CSTER ARM WLD STGHT RED	
14	315-737H84	NON CSTER ARM WLD STGHT BLUE	Obsolete
15	315-768D	SPINDLE 1IN	
16	800-001C	GREASE ZERK STRAIGHT 1/4-28	
17	802-034C	HHCS 1/2-13X1 1/4 GR5	S/N 1126380+
17	802-091C	HHCS 1/2-13X1 1/2 GR5	S/N 1126379-
18	802-114C	HHCS 3/8-16X2 1/2 GR5	
19	803-013C	NUT LOCK 3/8-16 PLT	
20	803-053C	NUT HEX SLOTTED 3/4-16	
21	803-169C	NUT HEX FLG LOCK 1/2-13 PLT	
22	804-016C	WASHER FLAT 1/2 SAE PLT	
23	804-025C	WASHER FLAT 3/4 SAE PLT	
24	805-015C	PIN LINCH 5/16 X 1 3/4	
25	805-045C	PIN COTTER 5/32 X 1 1/4 LG	
26	814-118C	TIRE/WHL 18X9.50-8 4PLY RIBBED	
27	815-104C	HUB 4-BOLT W/ZERK COMPLETE	
28	890-202C	GAUGE WHEEL SFT PIVOT BUSHING	

Hub Assembly (815-104C)

Applies to Models: AFM4216

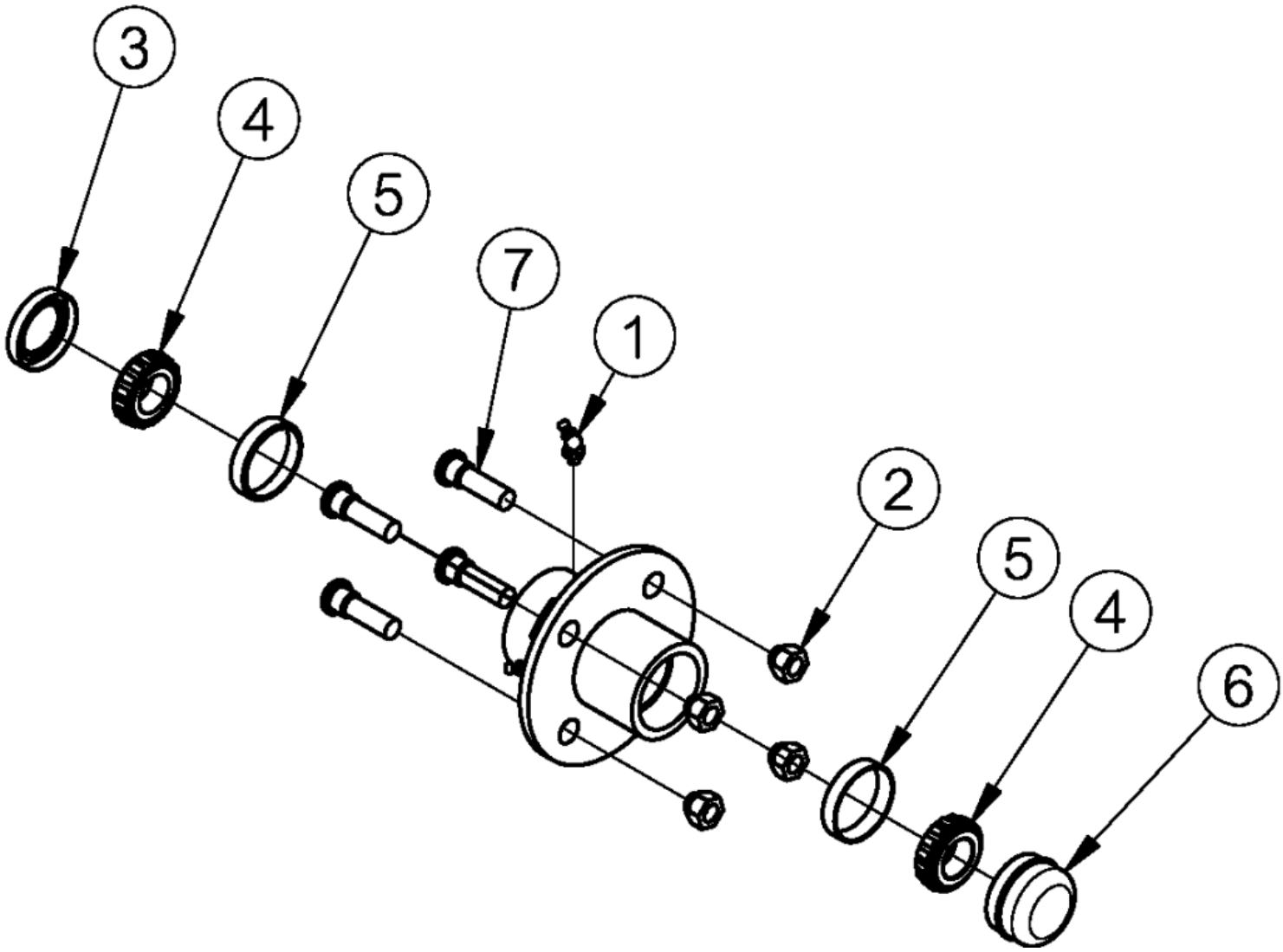

Hub Assembly (815-104C)

Applies to Models: AFM4216

Ref.	Part No.	Part Description	Comments
	DWG 37439	DRAWING IMAGE NUMBER	
	815-104C	HUB 4-BOLT W/ZERK COMPLETE *	Complete assembly
1	800-058C	GREASE ZERK 1/4-28 X 45-DEG	
2	803-159C	NUT LUG 1/2-20X60DEG PLT(.75AF	
3	816-014C	TINE GAUGE WHEEL HUB SEAL	
4	822-030C	BRG CONE 1.00ID L44643	
5	822-080C	BRG CUP 1.98OD L44610	
6	890-614C	GREASE CAP #1505	
7	BO-47	NEILSON STUD 1/2-20UNFX1 13/16	

Tire & Wheel 15 X 6-6NHS 4 PR (814-357C)

Applies to Models: AFM4216

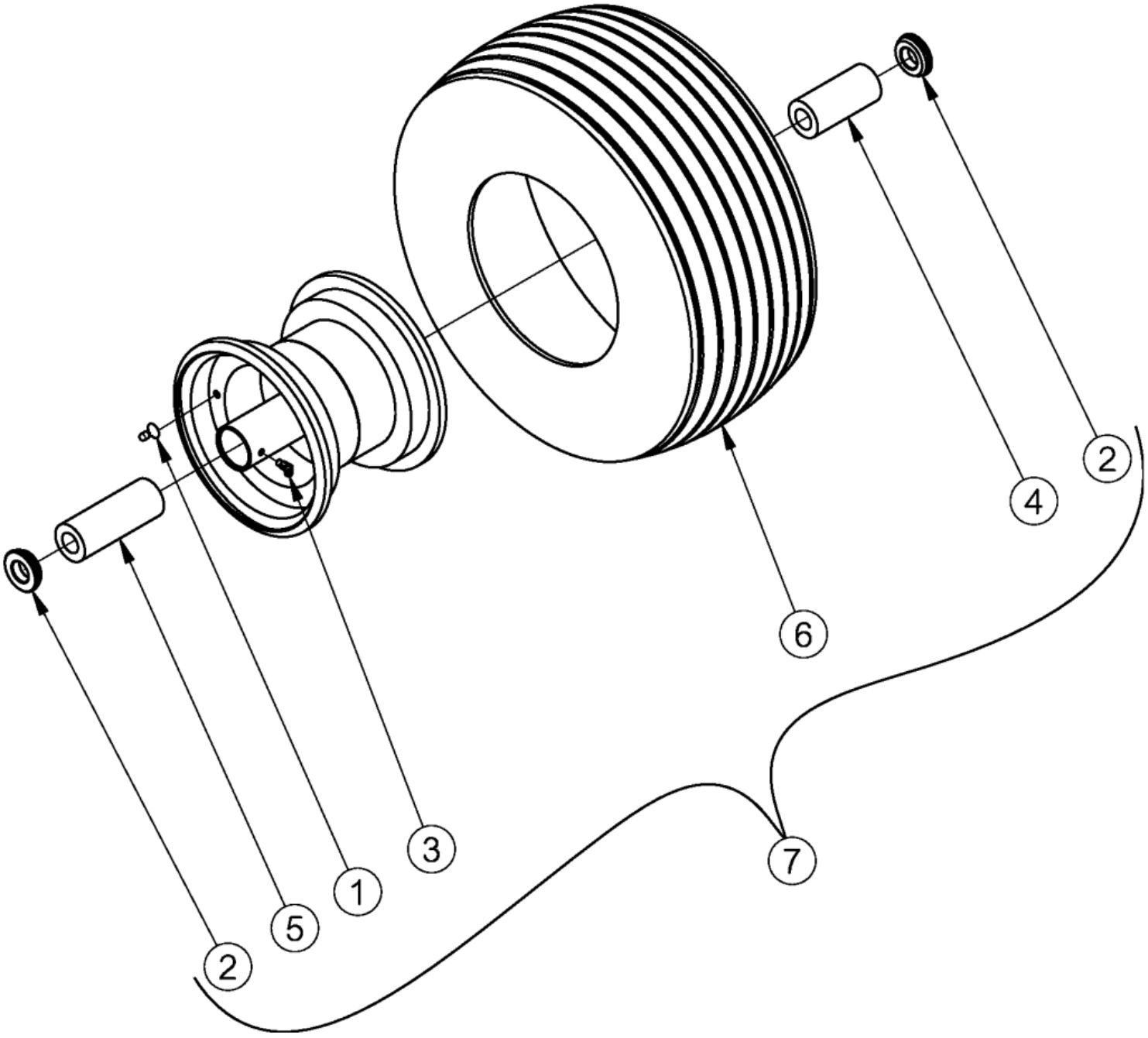

Tire & Wheel 15 X 6-6NHS 4 PR (814-357C)

Applies to Models: AFM4216

Ref.	Part No.	Part Description	Comments
	DWG 79170	Image No.	
	814-357C	TIRE/WHL, 15X6.00-6NHS 4PR RIB *	
1	94412	HOOSIER, VALVE STEM	
2	87040	HS BRG 3/4ID X 1.407OD X 5/8LG	
3	47616	HOOSIER, ZERK	
4	87414	HOOSIER, ROLLER BRGS	
5	87412	BRG, .75X1.38X2.20L ROLLER	
6	17543	HOOSIER, TIRE	
7	814-357C	TIRE/WHL, 15X6.00-6NHS 4PR RIB	

Tire & Wheel 18 X 9.50-8 (814-118C & 814-408C)

Applies to Models: AFM4216

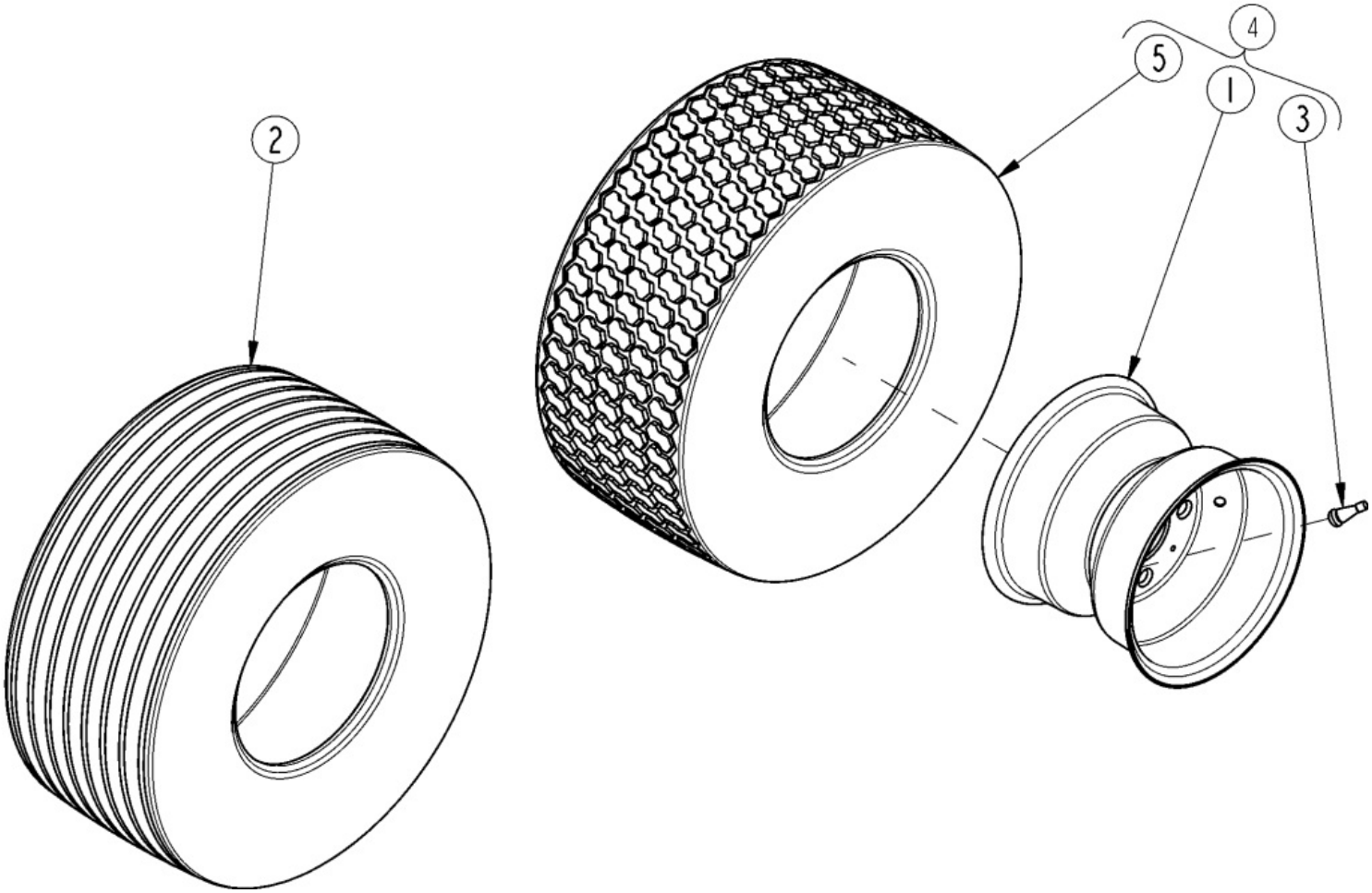

Tire & Wheel 18 X 9.50-8 (814-118C & 814-408C)

Applies to Models: AFM4216

Ref.	Part No.	Part Description	Comments
	DWG25926	Drawing Image Number	
1	492107	CARLISLE RIM FOR 18X9.5-8 TIRE	
2	10-097	CRLSL TIRE 18X9.5-8 4PLY RI B	S/N 664228-
3	TR-412	T1. VALVE MARTIN	
4	814-118C	TIRE/WHL 18X9.50-8 4PLY RIBBED	Rib Tread: S/N 1012421+
4	814-408C	TIRE/WHL 18X9.50-8 4PLY TURF	Turf Tread: S/N 1012420-
5	814-409C	TIRE 18X9.50-8 4PLY TURF TREAD	S/N 664229+

Gearbox (826-326C) Comer

Applies to Models: AFM4216

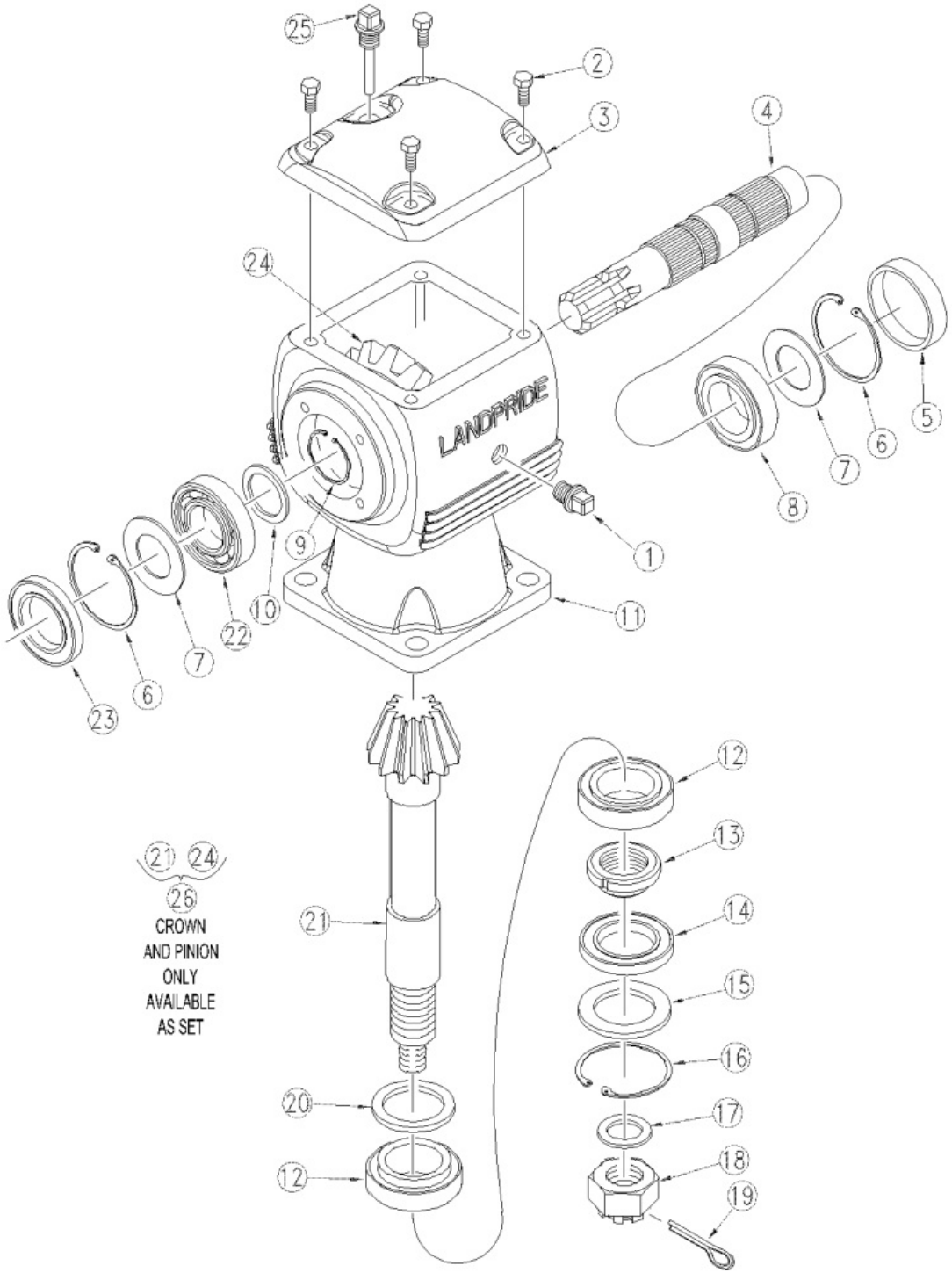

Gearbox (826-326C) Comer

Applies to Models: AFM4216

Ref.	Part No.	Part Description	Comments
	DWG 30000	Image No.	
	826-326C	GBOX MOWER 50 HP 1:2.8 CW *	Complete assembly
1	8.6.5.00006	CO OIL PLUG 3/8	
2	8.1.1.00501	CO BOLT M10X22 HHB	
3	0.195.1300.00	CO COVER	
4	0.195.2000.00	CO INPUT SHAFT 1" 3/8 Z6	
5	8.7.0.00744	CO CAP 72 X 10	
6	800-264C	SNAP RING INT 2.835 (72MM)	
6	8.5.2.00131	REP BY 800-264C	
7	A.248.500	COMER SHIM KIT 71.7	
8	822-167C	BRG ROLLER 1.37IDX2.83OD SET	
8	8.0.9.00026	RPBY 822-167C	Obsolete
9	8.5.1.00680	CO SNAP RING 40 UNI 7436	
10	0.259.7525.00	CO SHIM 35.3 X 48 X 2.5	
11	0.195.0300.00	CO HOUSING	
12	8.0.9.00102	CO ROLLER BRG 32208 CL-B	
13	0.278.7103.00	CO NUT M40 X 1.5	
14	8.7.3.00081	CO OIL SEAL 35 X 80 X 10 RTA35	
15	1.195.7100.00	CO PROTECTIVE FLAT WASHER	
16	8.5.3.00955	CO SNAP RING SB 81	
17	8.3.2.00409	CO FLAT WASHER 25 X 44 X 4	
18	8.2.2.01144	NUT CASTLE M 24 X 2	
19	826-487C	COMER 8.4.7.00516 COTTER	
19	8.4.7.00516	RPBY 826-487C	Obsolete
20	A244.501	CO SHIM KIT 40.3 51.5	
21	0.195.5000.00	RPBY A.195.000	
22	822-166C	BRG BALL 1.37IDX2.83OD 6207	
23	8.7.1.00152	OIL SEAL, 35 X 72 X 12/10	
23	8.7.3.00055	RPBY 8.7.1.00152	Obsolete
24	0.195.6000.00	RPBY A.195.000	
25	826-488C	COMER U0.195.7101.00 DIPSTICK	
25	U0.195.7101.00	RPBY 826-488C	Obsolete
26	A.195.000	CO CROWN GEAR AND PINION *	Includes items 21 & 24
		Notes: Oil Type 80-90W Capacity 3.5 Pints	

Gearbox (826-274C) OMNI

Applies to Models: AFM4216

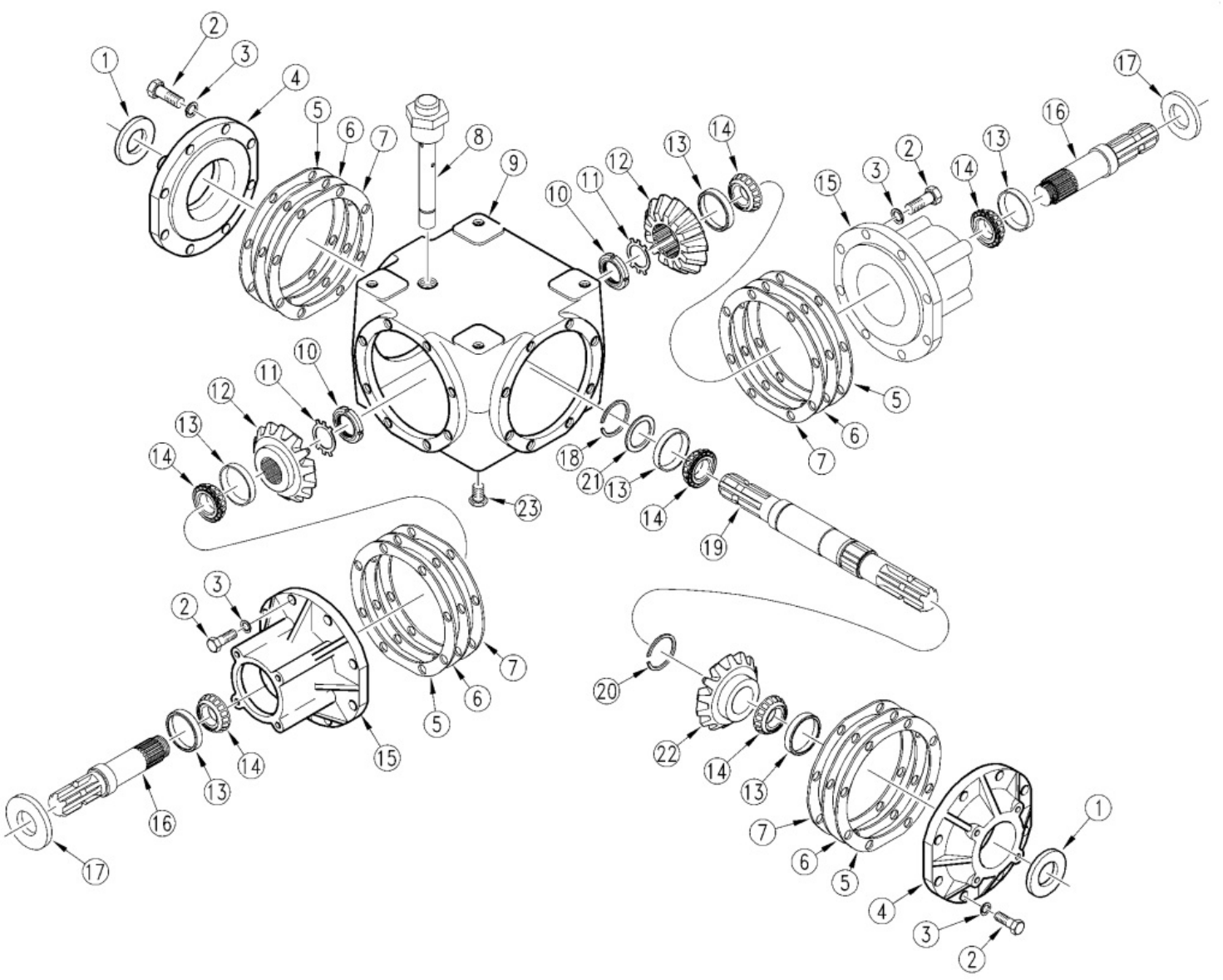

Gearbox (826-274C) OMNI

Applies to Models: AFM4216

Ref.	Part No.	Part Description	Comments
	DWG18259	Drawing Image Number	
	826-274C	GBOX DIVIDER 1:1 *	Complete assembly
1	060133	OMNI SEAL 50.95X34.93X9.53MM	
2	802-159C	HHCS 5/16-18X1 GR5	
3	804-009C	WASHER LOCK SPRING 5/16 PLT	
4	020166	OMNI CAP, THRU	
5	070218	OMNI GASKET, CAP 0.10MM	
6	070219	OMNI GASKET, CAP 0.20MM	
7	070220	OMNI GASKET, CAP 0.30MM	
8	140055	OMNI PLUG REL1/2-14NPTF,DPSTCK	
9	010180	OMNI HOUSING, 400 SER. 5B MODI	
10	120126	LOCK NUT, BRG M30X1.5	
11	130146	LOCKWASHER, BRG M30	
12	030512	OMNI GEAR, OUTPUT 20T (1:1)	
13	822-167C	BRG ROLLER 1.37IDX2.83OD SET	
13	050170	RPBY 822-167C	Obsolete
14	822-167C	BRG ROLLER 1.37IDX2.83OD SET	
14	050172	RPBY 822-167C	Obsolete
15	020164	OMNI CAP CANTILEVERED	
16	040345	OMNI SHAFT-OUTPUT 1 3/8-6A SPL	
17	060134	OMNI SEAL 73.18X42.85X9.53MM	
18	200199	OMNI RETAINING RING, 35MM	
18	200142	RPBY 200199	Obsolete
19	040343	OMNI SHAFT-INPUT 1 3/8-6A SPL	
20	200141	OMNI RTNG. RING 38MM RC DSH-38	
21	090099	OMNI SPACER	
22	030467	OMNI GEAR, INPUT 20T (1:1)	
23	140004	OMNI PLUG, SOCKET HD. 1/2 PIPE *	
		Notes: Oil Type 80-90W Capacity 2.5 Pints	

Gearbox (826-274C) SD LLC

Applies to Models: AFM4216

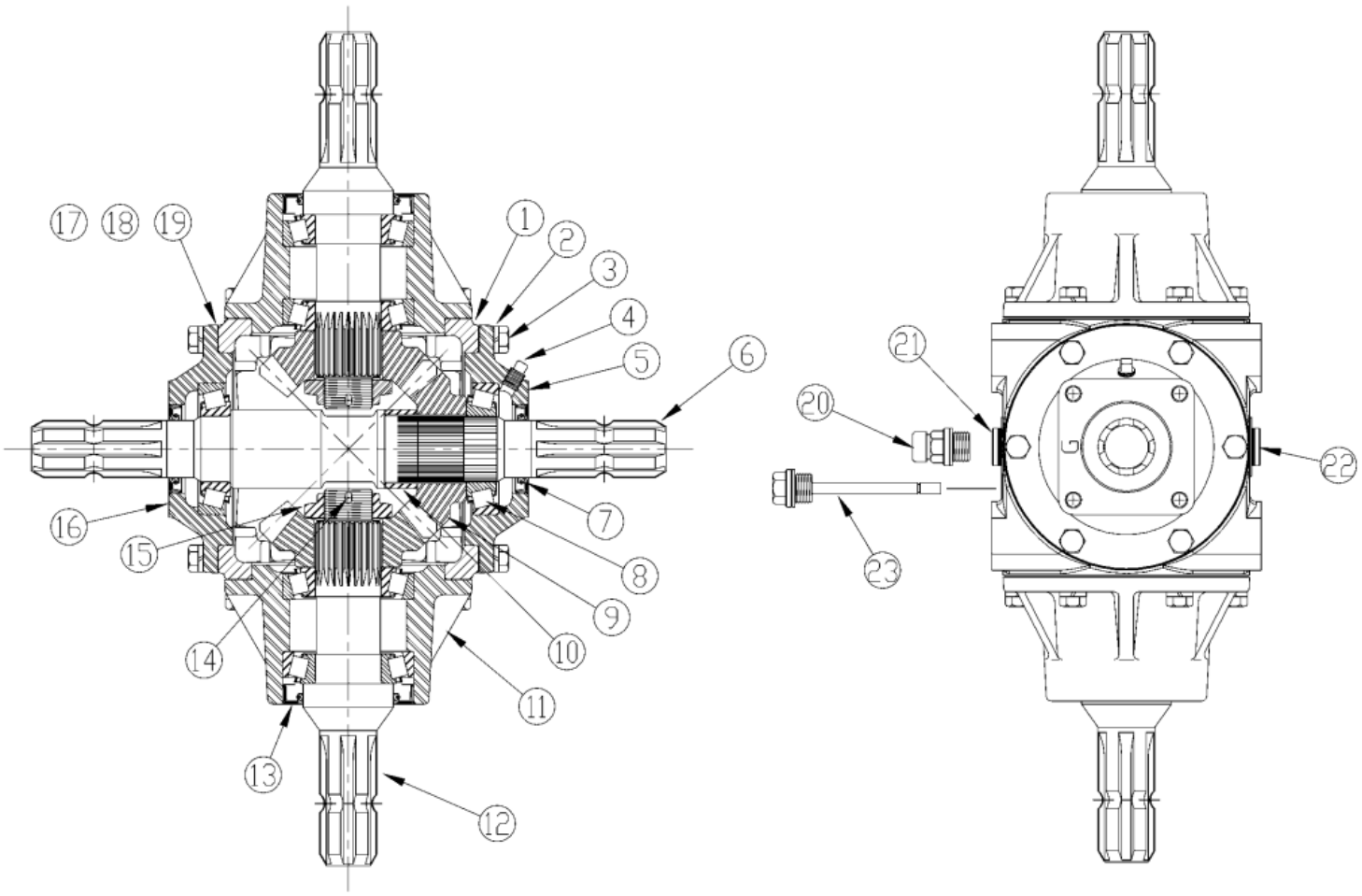

Gearbox (826-274C) SD LLC

Applies to Models: AFM4216

Ref.	Part No.	Part Description	Comments
	DWG 30274	Drawing Image Number	
	826-274C	GBOX DIVIDER 1:1 *	Complete assembly
1	18-202	SD HOUSING	
2	804-158C	WASHER SPRING LOCK M10 PLT	
3	06-012	ITG M10 X 1.5 X 25 CAP SCREW	
4	140017	OMNI PLUG PIPE SQ HD1/8-27NPTF	
5	20-047	SD THRU CAP W/LEVEL PLUG	
6	02-061	ITG THRU SHAFT	Obsolete
7	05-002	ITG INPUT OIL SEAL	
8	822-191C	BRG ROLLER 1.57IDX3.14OD SET	
9	03-067	ITG 16 TOOTH GEAR	
10	10-042	ITG SPACER	
11	20-028	ITG OUTPUT HUB CAP	
12	02-062	ITG HUB SHAFT	
13	05-015	ITG HUB SHAFT SEAL	
14	12-006	ITG COTTER PIN	
15	11-012	ITG BRG ADJ. NUT	
16	20-029	ITG THRU SHAFT HUB CAP	
17	08-027	ITG GASKET 0.25MM (METAL)	
18	08-028	ITG GASKET 0.15MM (METAL)	
19	08-029	RPBY 08-028	Obsolete
20	09-049	SD FREE FLOW VENT PLUG	
21	07-022	ITG SEALING WASHER	
22	09-013	ITG DRAIN PLUG	
23	09-100	SD 3/8" PLUG W/DIPSTICK *	
		Notes: Oil Type 80-90W Capacity 2.5 Pints	

Gearbox (826-327C) Comer

Applies to Models: AFM4216

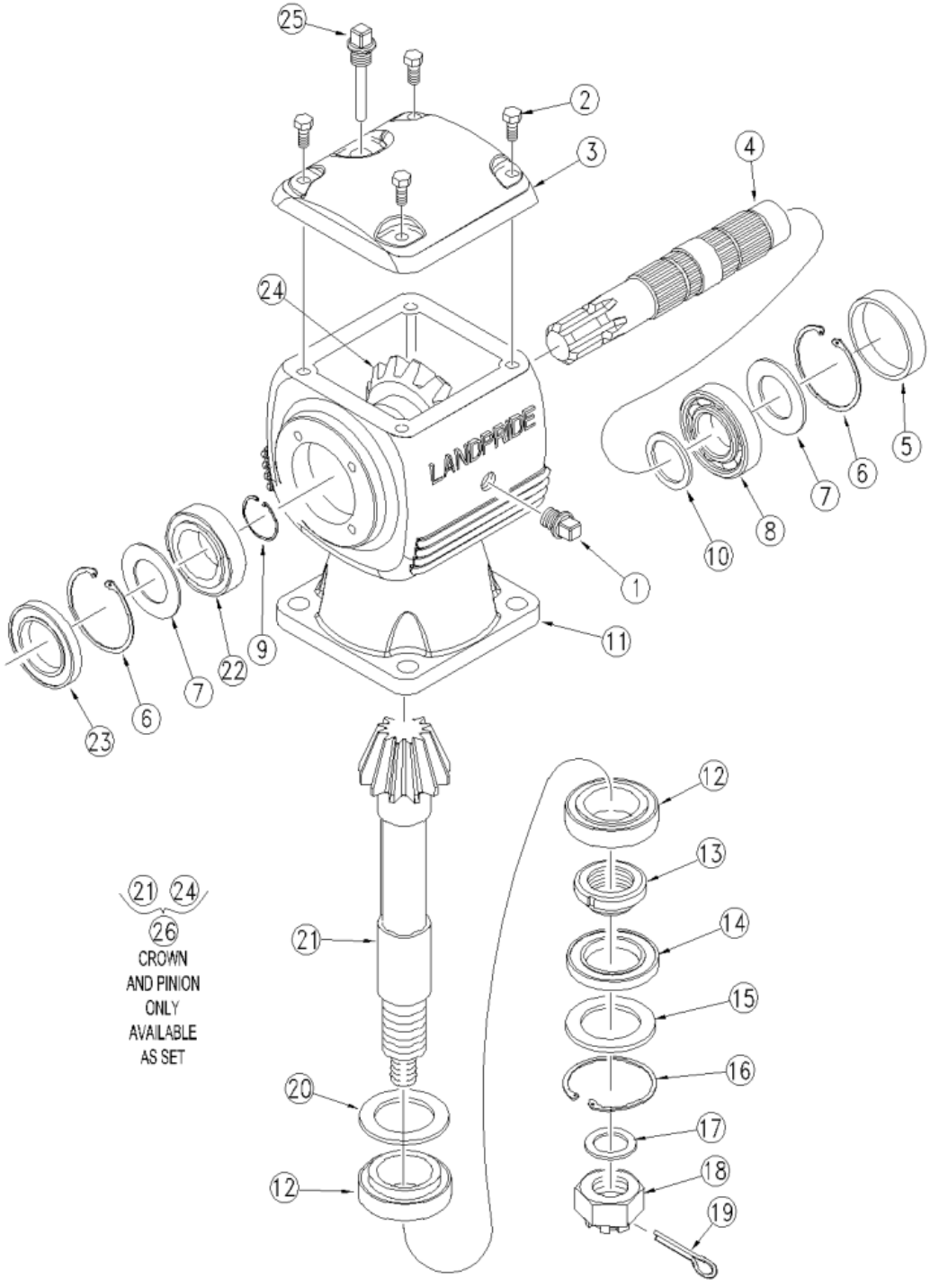

Gearbox (826-327C) Comer

Applies to Models: AFM4216

Ref.	Part No.	Part Description	Comments
	DWG 19550	Drawing Image Number	
	826-327C	GBOX MOWER 50 HP 1:2.8 CCW *	Complete assembly
1	8.6.5.00006	CO OIL PLUG 3/8	
2	8.1.1.00501	CO BOLT M10X22 HHB	
3	0.195.1300.00	CO COVER	
4	0.195.2000.00	CO INPUT SHAFT 1" 3/8 Z6	
5	8.7.0.00744	CO CAP 72 X 10	
6	800-264C	SNAP RING INT 2.835 (72MM)	
6	8.5.2.00131	REP BY 800-264C	
7	A.248.500	COMER SHIM KIT 71.7	
8	822-166C	BRG BALL 1.37IDX2.83OD 6207	
9	8.5.1.00680	CO SNAP RING 40 UNI 7436	
10	0.259.7525.00	CO SHIM 35.3 X 48 X 2.5	
11	0.195.0300.00	CO HOUSING	
12	8.0.9.00102	CO ROLLER BRG 32208 CL-B	
13	0.278.7103.00	CO NUT M40 X 1.5	
14	8.7.3.00081	CO OIL SEAL 35 X 80 X 10 RTA35	
15	1.195.7100.00	CO PROTECTIVE FLAT WASHER	
16	8.5.3.00955	CO SNAP RING SB 81	
17	8.3.2.00409	CO FLAT WASHER 25 X 44 X 4	
18	8.2.2.01144	NUT CASTLE M 24 X 2	
19	826-487C	COMER 8.4.7.00516 COTTER	
19	8.4.7.00516	RPBY 826-487C	Obsolete
20	A244.501	CO SHIM KIT 40.3 51.5	
21	0.195.5000.00	RPBY A.195.000	
22	822-167C	BRG ROLLER 1.37IDX2.83OD SET	
22	8.0.9.00026	RPBY 822-167C	Obsolete
23	8.7.1.00152	OIL SEAL, 35 X 72 X 12/10	
23	8.7.3.00055	RPBY 8.7.1.00152	
24	0.195.6000.00	RPBY A.195.000	
25	826-488C	COMER U0.195.7101.00 DIPSTICK	
25	U0.195.7101.00	RPBY 826-488C	Obsolete
26	A.195.000	CO CROWN GEAR AND PINION *	Includes items 21 & 24
		Notes: Oil Type 80-90W Capacity 3.5 Pints	

Hydraulic Cylinder (810-150C) Midway

Applies to Models: AFM4216

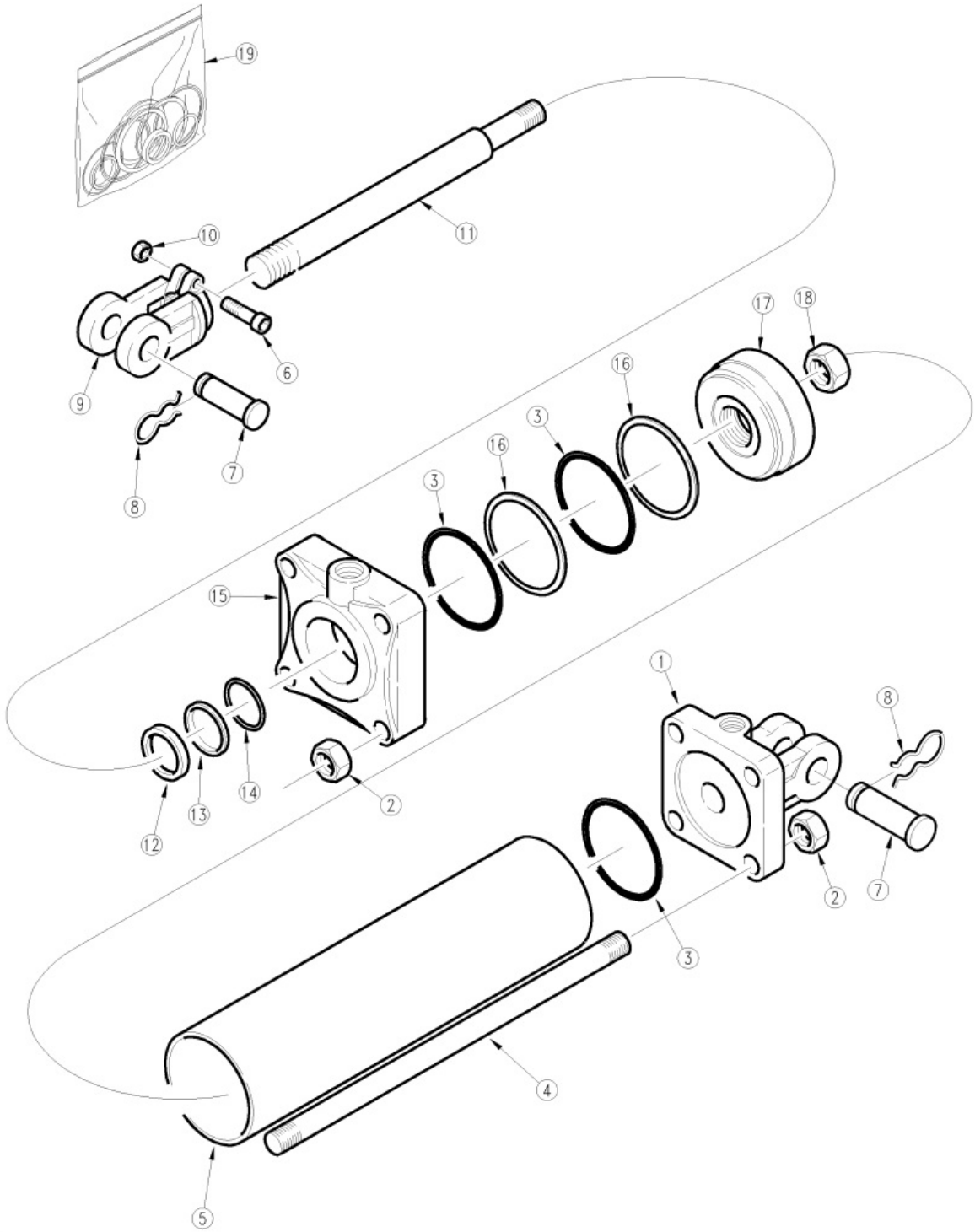

Hydraulic Cylinder (810-150C) Midway

Applies to Models: AFM4216

Ref.	Part No.	Part Description	Comments
	DWG 78269	Drawing Image Number	
	810-150C	CYL 2.5X12X1.25 ROD (TIE ROD) *	Complete assembly
1	6R0130	MW BASE	
1	6M3118	RPBY 6R0130	Obsolete
2	803-234C	NUT HEX 3/8-16 PLAIN	
2	2A0012	RPBY 803-234C	Obsolete
3	N/A	NOT AVAILABLE	Only available in seal kit #19
4	7M3320	MW TIE ROD	
5	5M3120	MW TUBE	
6	802-023C	HHCS 3/8-16X1 3/4 GR5	
6	2A0006	RPBY 802-023C	Obsolete
7	805-124C	PIN CLVS 1.0X3.69 USBL GR5	
7	2A0208	RPBY 805-124C	Obsolete
8	2A0132	MW PIN CLIP	
9	1M6010-ADI	MIDWAY HARDENED CLEVIS ADI	
9	1M6010	RPBY 1M6010-ADI	Obsolete
10	803-234C	NUT HEX 3/8-16 PLAIN	
10	2A0012	RPBY 803-234C	Obsolete
11	2M3418	MW ROD	
12	N/A	NOT AVAILABLE	Only available in seal kit #19
13	N/A	NOT AVAILABLE	Only available in seal kit #19
14	N/A	NOT AVAILABLE	Only available in seal kit #19
15	3R0406	MW HEAD	
16	N/A	NOT AVAILABLE	Only available in seal kit #19
17	4M3108	MW PISTON	
17	4M3102	RPBY 4M3108	Obsolete
18	803-114C	NUT LOCK 3/4-16 NYLOC COLLAR	
18	2A0022	RPBY 803-114C	Obsolete
19	810-177C	SEAL KIT MW (5A3104) 2.5X1.25R	

Hydraulic Cylinder (810-150C) Cross

Applies to Models: AFM4216

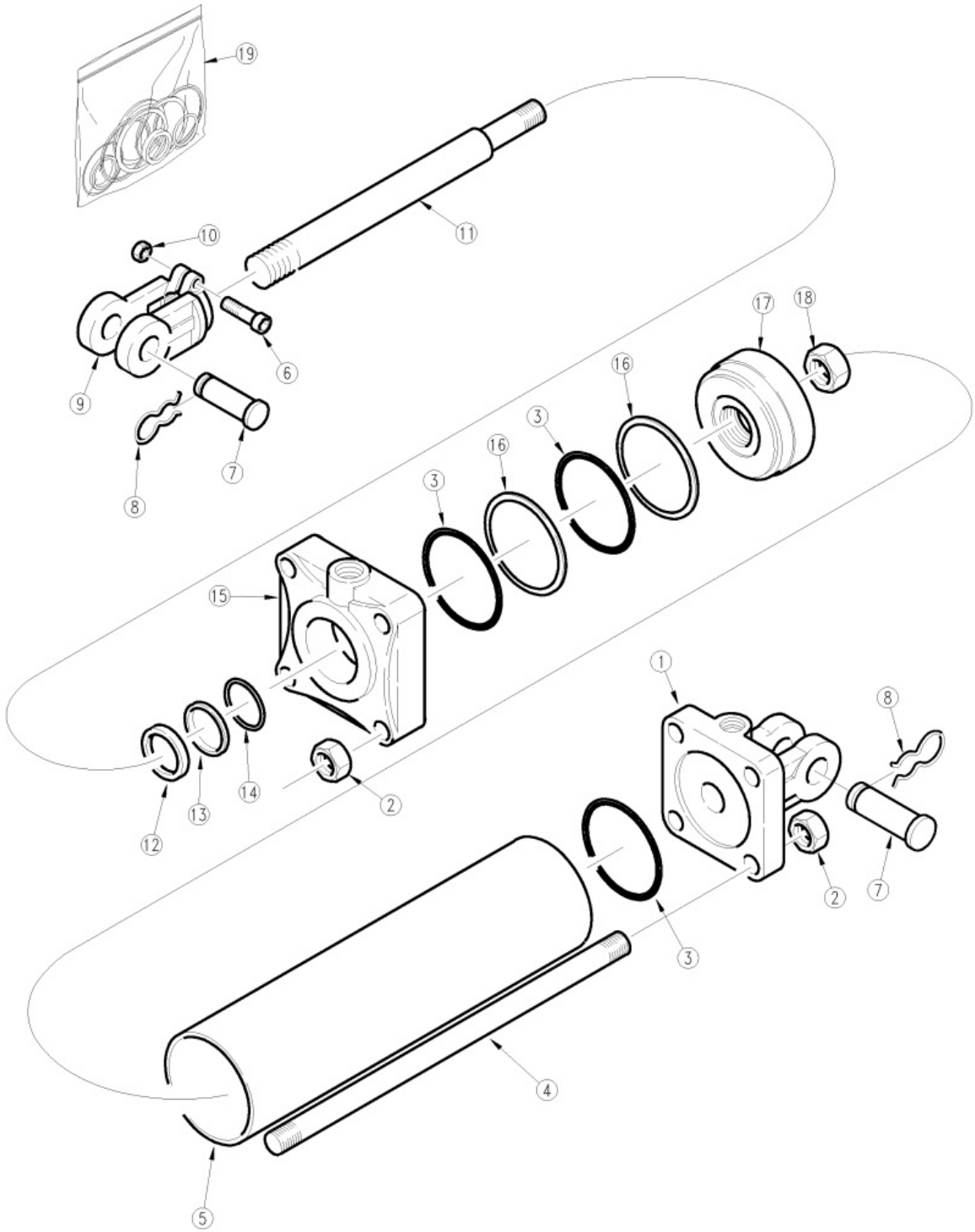

Hydraulic Cylinder (810-150C) Cross

Applies to Models: AFM4216

Ref.	Part No.	Part Description	Comments
	DWG 78268	Drawing Image Number	
	810-150C	CYL 2.5X12X1.25 ROD (TIE ROD) *	Complete assembly
1	1D1505-3	BASE CROSS	
2	2A0235-6	CROSS NUT, CLEVIS & TIE ROD	
3	N/A	NOT AVAILABLE	Only available in seal kit #19
4	2A0578-1675	TIE ROD CROSS	
5	1D0005-1450	TUBE CROSS	
6	2A0079-616	CROSS SCREW, CAP	
7	1D1551-16275	CROSS CLEVIS PIN 2.75"USABLE	
8	805-032C	PIN HAIR COTTER .148 WIRE	
8	2A0308-1	RPBY 805-032C	Obsolete
9	1D1003-5	CROSS ROD CLEVIS	
10	2A0235-6	CROSS NUT, CLEVIS & TIE ROD	
11	1D0206-1675	ROD CROSS	
12	N/A	NOT AVAILABLE	Only available in seal kit #19
13	N/A	NOT AVAILABLE	Only available in seal kit #19
14	N/A	NOT AVAILABLE	Only available in seal kit #19
15	1D1155-17	HEAD CROSS	
16	N/A	NOT AVAILABLE	Only available in seal kit #19
17	1D1401-250	CROSS PISTON	
18	2A0246-12	CROSS NUT, PISTON	
19	810-178C	SEAL KIT CROSS 2.5 CYL 1C4982	

Hydraulic Cylinder (810-200C) Midway

Applies to Models: AFM4216

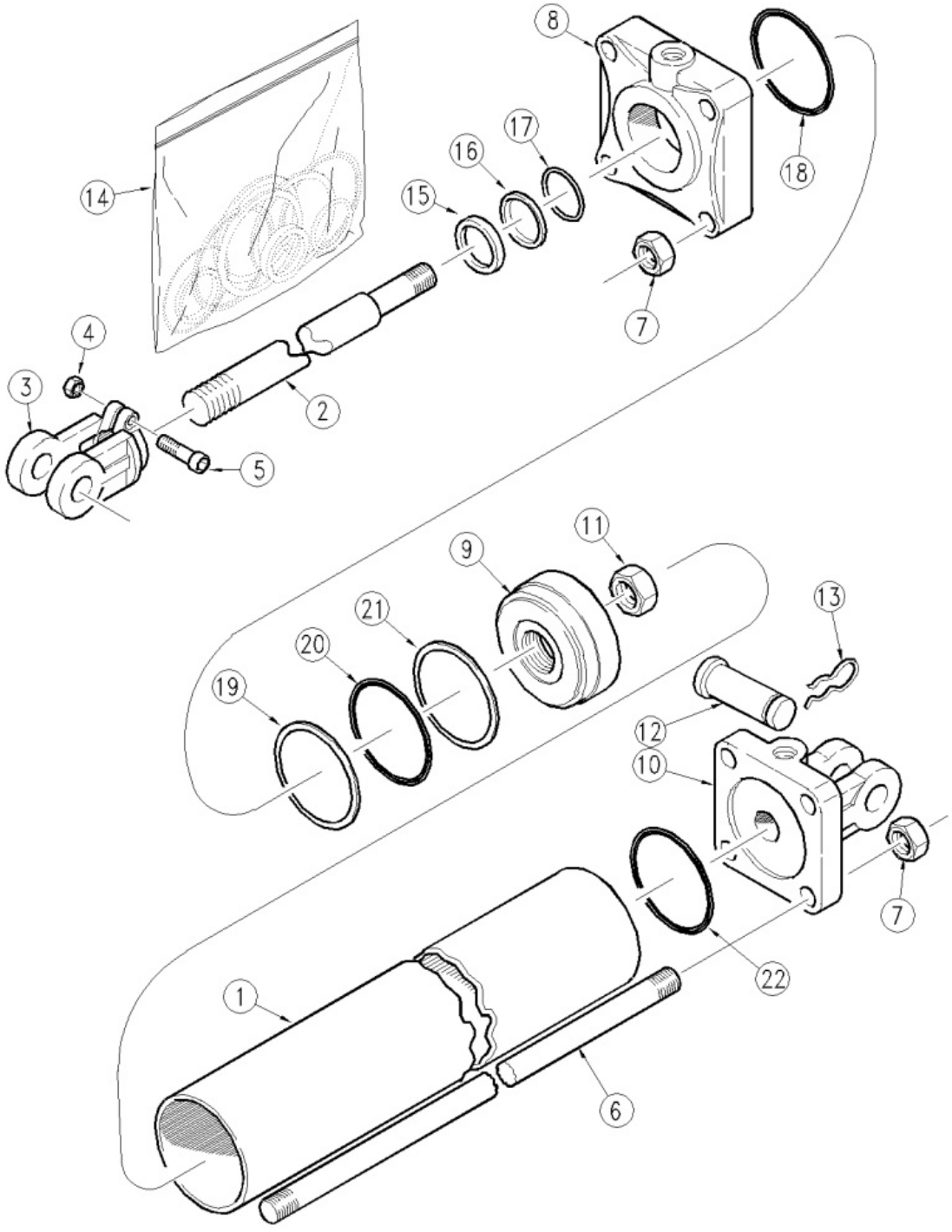

Hydraulic Cylinder (810-200C) Midway

Applies to Models: AFM4216

Ref.	Part No.	Part Description	Comments
	DWG 78253	Drawing Image Number	
	810-200C	CYL 2.5X8X1.12 ROD (TIE)1 PIN *	Complete assembly
1	5M3116	MW TUBE 2-1/2 X 8 X 1-1/8 ROD	
2	2M3316	MW ROD	
3	1M6006-ADI	MIDWAY HARDENED CLEVIS ADI	Obsolete
3	1M6006	RPBY 1M6006-ADI	
4	803-234C	NUT HEX 3/8-16 PLAIN	
4	2A0012	RPBY 803-234C	Obsolete
5	802-023C	HHCS 3/8-16X1 3/4 GR5	
5	2A0006	RPBY 802-023C	Obsolete
6	7M3316	MW TIE ROD	
7	803-234C	NUT HEX 3/8-16 PLAIN	
7	2A0012	RPBY 803-234C	Obsolete
8	3R0310	MW HEAD	
8	3M3310	RPBY 3R0310	Obsolete
9	4M3108	MW PISTON	
9	4M3102	RPBY 4M3108	Obsolete
10	6R0150-ADI	MIDWAY ADI BASE	
10	6R0150	RPBY 6R0150-ADI	Obsolete
10	6M3126	RPBY 6R0150	Obsolete
11	803-114C	NUT LOCK 3/4-16 NYLOC COLLAR	
11	2A0022	RPBY 803-114C	Obsolete
12	805-124C	PIN CLVS 1.0X3.69 USBL GR5	
12	2A0208	RPBY 805-124C	Obsolete
13	2A0132	MW PIN CLIP	
14	810-210C	SEAL KIT MW 2.5 CYL 3A3102	Rev. 2
14	3A3102	RPBY 810-210C	(Obsolete) Rev 1; Use up stock
15	N/A	NOT AVAILABLE	Only available in seal kit item 19
16	N/A	NOT AVAILABLE	Only available in seal kit item 19
17	N/A	NOT AVAILABLE	Only available in seal kit item 19
18	N/A	NOT AVAILABLE	Only available in seal kit item 19
19	N/A	NOT AVAILABLE	Only available in seal kit item 19
20	N/A	NOT AVAILABLE	Only available in seal kit item 19
21	N/A	NOT AVAILABLE	Only available in seal kit item 19
22	N/A	NOT AVAILABLE	Only available in seal kit item 19

Hydraulic Arrangement

Applies to Models: AFM4216

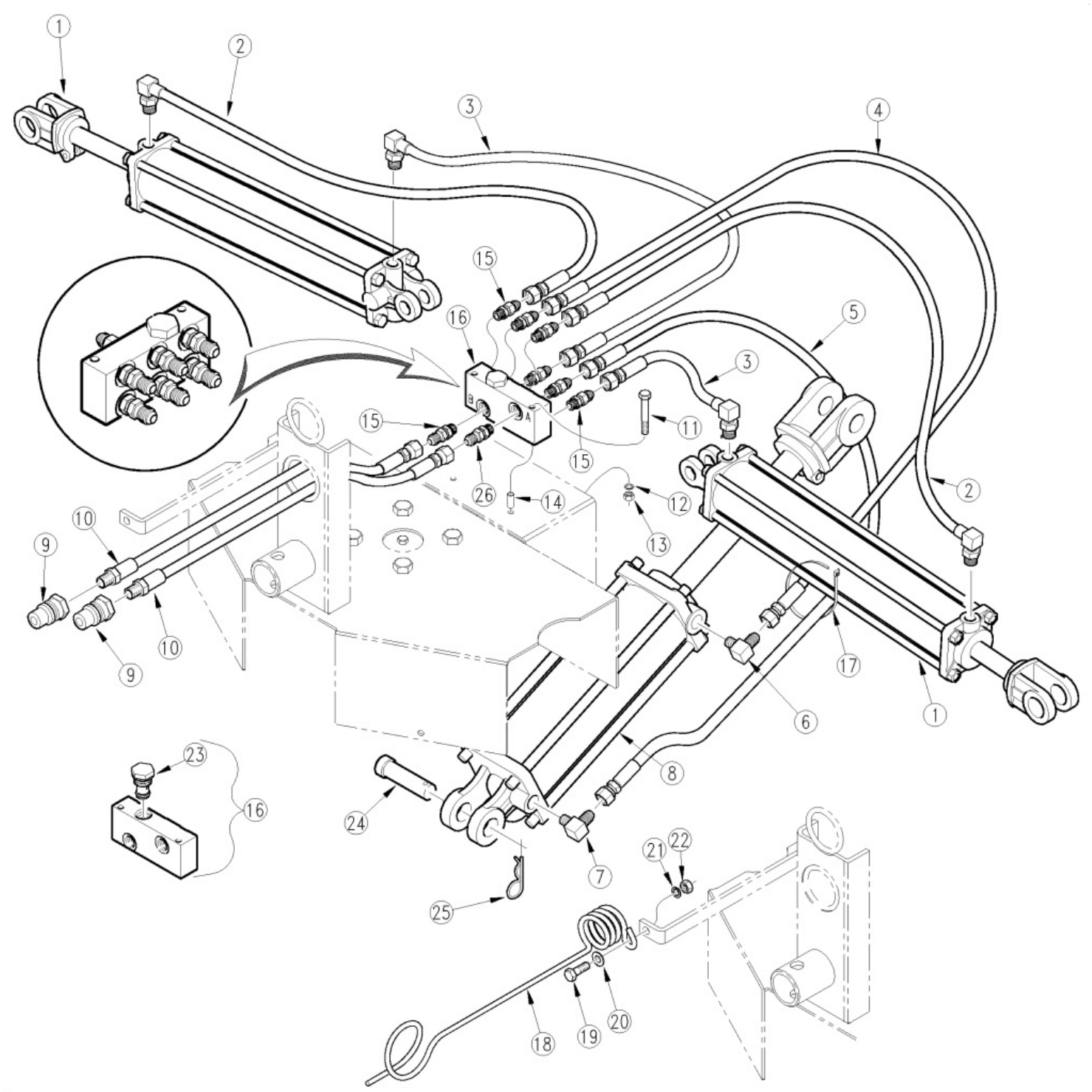

Hydraulic Arrangement

Applies to Models: AFM4216

Ref.	Part No.	Part Description	Comments
	DWG 13562	Drawing Image Number	
1	810-150C	CYL 2.5X12X1.25 ROD (TIE ROD)	
2	811-445C	HH1/4R2 035 9/16FJIC 3/8MORB90	
3	811-444C	HH1/4R2 020 9/16FJIC 3/8MORB90	
4	811-442C	HH1/4R2 028 9/16FJIC	
5	811-443C	HH1/4R2 036 9/16FJIC	
6	811-065C	EL 9/16MJIC 9/16MORB	
7	811-065C	EL 9/16MJIC 9/16MORB	
8	810-200C	CYL 2.5X8X1.12 ROD (TIE)1 PIN	
9	811-394C	CP 3/4FORB MALE QD POPPET TYPE	
10	811-441C	HH1/4R2 104 9/16FJIC 3/4 MORB	
11	802-660C	HHCS 1/4-20X3 1/2 GR5	S/N _____+
11	802-451C	HHCS 1/4-20X4 GR5	
11	802-308C	HHCS 1/4-20X3 1/4 GR5	
12	804-006C	WASHER LOCK SPRING 1/4 PLT	
13	803-006C	NUT HEX 1/4-20 PLT	
14	315-743D	SPCR 1/2 OD X .28ID X 1.00"	
14	315-492D	SPCR 1/2 OD X .28 ID X 5/8	
15	811-170C	AD 9/16MORB 9/16MJIC	
16	811-495C	SP-8 PORT RELIEF 9/16-18FORB	
17	800-060C	CABLE TIE .19X14.25 3DIA 50LB	
18	807-023C	SPRING HOSE LOOP	
19	802-079C	HHCS 3/8-16X1 1/4 GR5	
20	804-012C	WASHER FLAT 3/8 SAE PLT	
21	804-013C	WASHER LOCK SPRING 3/8 PLT	
22	803-014C	NUT HEX 3/8-16 PLT	
23	8026	RPBY 811-495C	Obsolete
24	805-004C	PIN CLVS 1.0X2.75 USBL	
25	805-088C	PIN, HAIR COTTER 3/16 WIRE DIA	
26	811-694C	ORAD 1/32 9/16MORB 9/16MJIC	

Hydraulic Cylinder (810-150C) Red Lion

Applies to Models: AFM4216

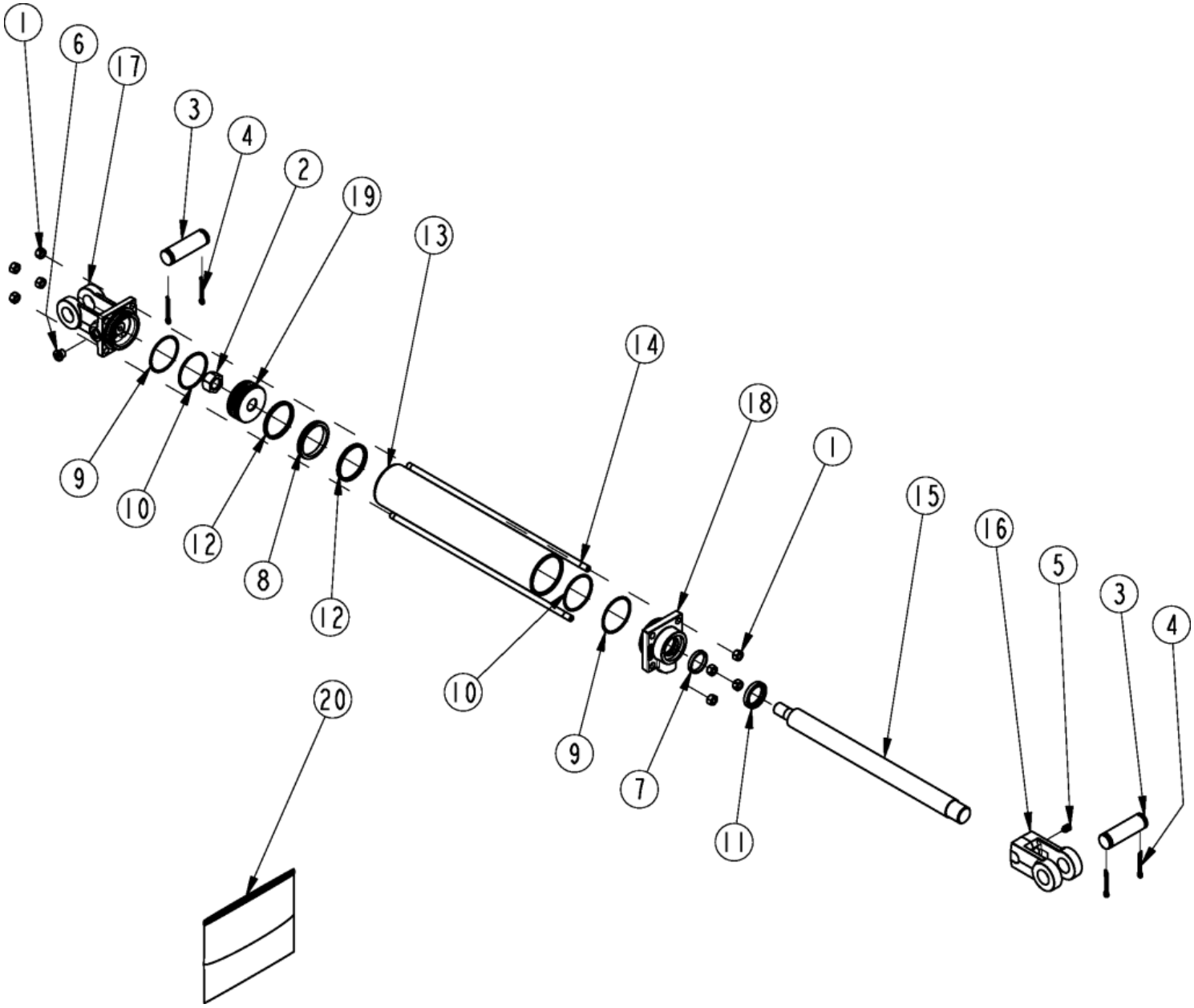

Hydraulic Cylinder (810-150C) Red Lion

Applies to Models: AFM4216

Ref.	Part No.	Part Description	Comments
	DWG 25899	Image No.	
	810-150C	CYL 2.5X12X1.25 ROD (TIE ROD) *	Complete assembly
1	803-014C	NUT HEX 3/8-16 PLT	
2	130556	MON PISTON NUT	
3	134953	LION PIN	
4	135995	MON CLEVIS PIN COTTER	
5	801-023C	SCREW SET SH 3/8-16X3/8 TYPE C	
6	186561	PLUG 9/16-18UNF MORB SOCKET HD	
7	N/A	NOT AVAILABLE	Only available in Seal Kit #20
8	N/A	NOT AVAILABLE	Only available in Seal Kit #20
9	N/A	NOT AVAILABLE	Only available in Seal Kit #20
10	N/A	NOT AVAILABLE	Only available in Seal Kit #20
11	N/A	NOT AVAILABLE	Only available in Seal Kit #20
12	N/A	NOT AVAILABLE	Only available in Seal Kit #20
13	491672	LION CYL TUBE 2.5 X 12	
14	492222	LION TIE ROD 3/8, 12 CYL	
15	492647	LION ROD 1.25 X 12	
16	492650	LION ROD CLEVIS 1 1/8-12UNF	
17	492688	MON CLEVIS CAP 2.5-9/16ORB-1.0	
18	494286	MON ROD CAP3.5-1.25-3/4ORB-TSS	
19	258818	MON PISTON2.50-.750-TSS-ISO-WR	
20	810-886C	MON SEAL KIT 661701	

Hydraulic Cylinder (810-200C) Red Lion

Applies to Models: AFM4216

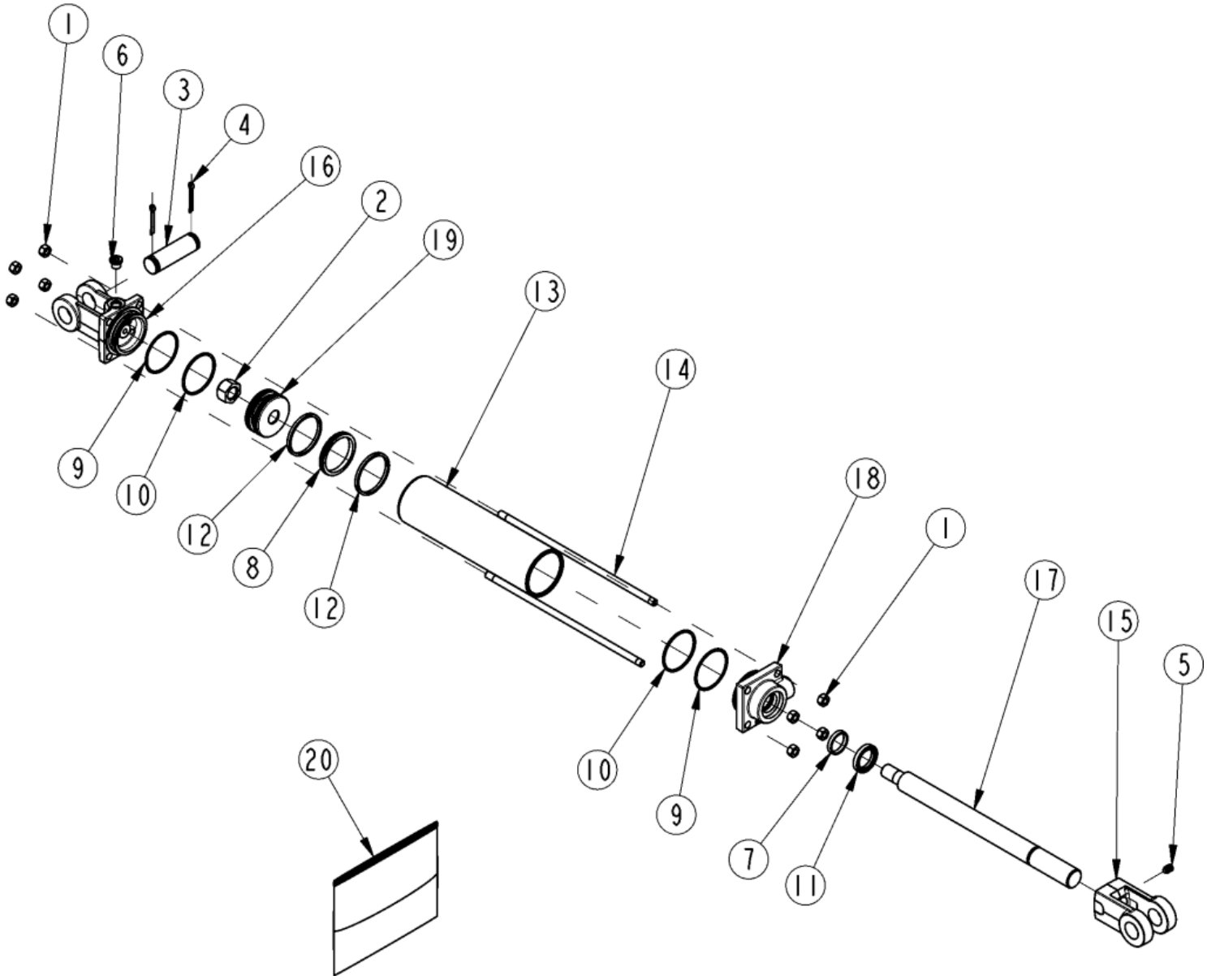

Hydraulic Cylinder (810-200C) Red Lion

Applies to Models: AFM4216

Ref.	Part No.	Part Description	Comments
	DWG 25901	Drawing Image Number	
	810-200C	CYL 2.5X8X1.12 ROD (TIE)1 PIN *	Complete assembly
1	803-014C	NUT HEX 3/8-16 PLT	
2	130556	MON PISTON NUT	
3	134953	LION PIN	
4	135995	MON CLEVIS PIN COTTER	
5	801-023C	SCREW SET SH 3/8-16X3/8 TYPE C	
6	186561	PLUG 9/16-18UNF MORB SOCKET HD	
7		MON ROD SEAL	Only Found in Kit #20
8		MON PISTON SEAL	Only Found in Kit #20
9		MON END CAP BACKUP WASHERS	Only Found in Kit #20
10		MON END CAP O-RING	Only Found in Kit #20
11		LION WIPER SEAL	Only Found in Kit #20
12		MON PISTON WEAR RING	Only Found in Kit #20
13	491668	LION CYL. TUBE 2.5 X 8	
14	492218	LION TIE ROD 3/8, 8 CYL	
15	492650	LION ROD CLEVIS 1 1/8-12UNF	
16	492688	MON CLEVIS CAP 2.5-9/16ORB-1.0	
17	492699	LION ROD 1.125 ASAE 8	
18	494391	MON ROD CP2.50-1.12-9/16ORB-TS	
19	258818	MON PISTON2.50-.750-TSS-ISO-WR	
20	810-886C	MON SEAL KIT 661701	

Hydraulic Cylinder (801-555C) Midway

Applies to Models: AFM4216

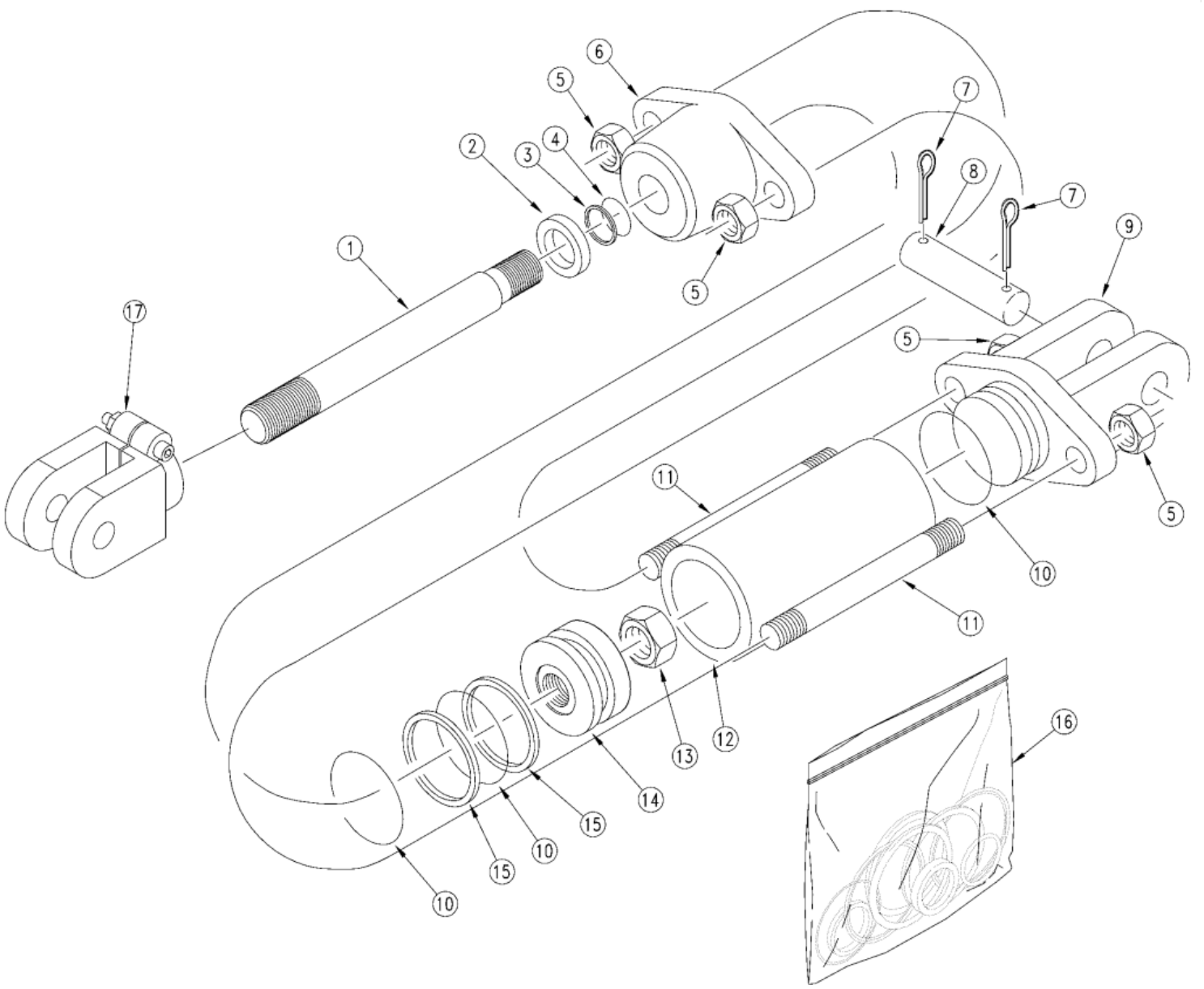

Hydraulic Cylinder (801-555C) Midway

Applies to Models: AFM4216

Ref.	Part No.	Part Description	Comments
	DWG35483	Drawing Image Number	
	810-555C	CYL 1.5X2.5X.75 ROD W/CLEVIS *	Complete assembly
1	2M1190	MW ROD	
2	N/A	NOT AVAILABLE	Only available in Seal Kit #16
3	N/A	NOT AVAILABLE	Only available in Seal Kit #16
4	N/A	NOT AVAILABLE	Only available in Seal Kit #16
5	2A0014	MW TIE ROD NUT	
6	3M1108	MW HEAD	
7	2A0130	MW COTTER PIN	
8	2A0202	MW CLEVIS PIN	
9	N/A	NOT AVAILABLE	
10	N/A	NOT AVAILABLE	Only available in Seal Kit #16
11	7M1302	MW TIE ROD	
12	N/A	NOT AVAILABLE	Only available in Seal Kit #16
13	2A0018	MW TIE ROD NUT	
14	4M1102	MW PISTON	
15	N/A	NOT AVAILABLE	Only available in Seal Kit #16
16	810-249C	SEAL KIT MW 3A1102	
17	810-491C	MIDWAY ROD CLEVIS 3/4-16 UNF	

Hydraulic Wing Unlock (315-722A)

Applies to Models: AFM4216

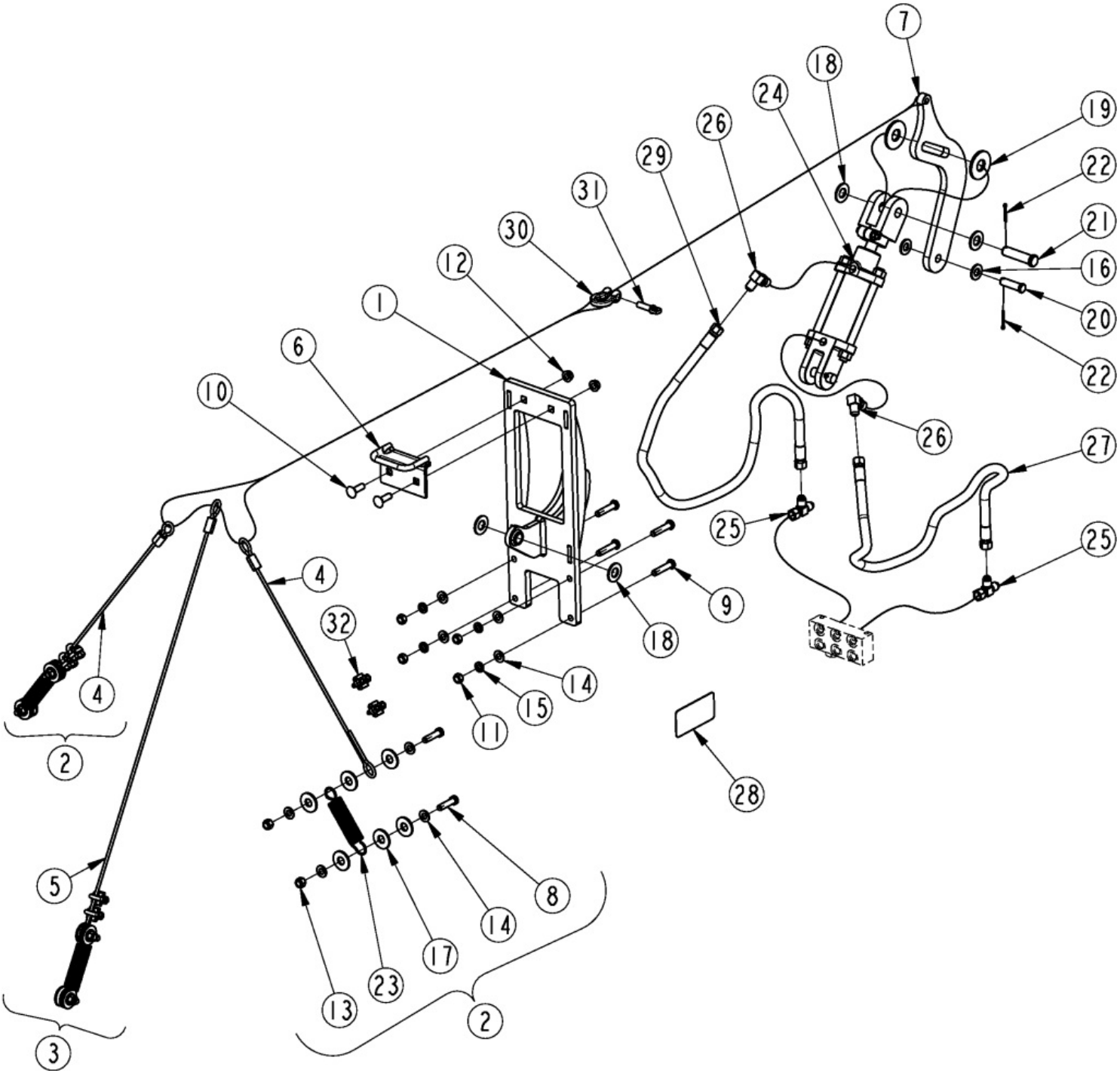

Hydraulic Wing Unlock (315-722A)

Applies to Models: AFM4216

Ref.	Part No.	Part Description	Comments
	DWG 70127	Image No.	
	315-722A	HYD WING UNLOCK ASSY	
		*	
1	315-723H	HYD WING UNLOCK MOUNT	
2	315-724S	WING UNLOCK WING CABLE ASSY	
3	315-725S	WING UNLOCK REAR CABLE ASSY	
4	315-726V	AIRCRAFT CABLE WITH CRIMP	
5	315-727V	AIRCRAFT CABLE W/ CRIMP, LONG	
6	315-728H	WIRE GUIDE	
7	332-009D	WING UNLOCK LINKAGE	
8	802-022C	HHCS 3/8-16X1 1/2 GR5	
9	802-023C	HHCS 3/8-16X1 3/4 GR5	
10	802-155C	RHSNB 3/8-16X1 1/4 GR5	
11	803-014C	NUT HEX 3/8-16 PLT	
12	803-068C	NUT HEX FLANGE 3/8-16 PLT	
13	803-078C	NUT LOCK 3/8-16 NYLON INSERT	
14	804-012C	WASHER FLAT 3/8 SAE PLT	
15	804-013C	WASHER LOCK SPRING 3/8 PLT	
16	804-016C	WASHER FLAT 1/2 SAE PLT	
17	804-017C	WASHER FLAT 1/2 USS PLT	
18	804-021C	WASHER FLAT 5/8 SAE PLT	
19	804-024C	WASHER FLAT 3/4 USS PLT	
20	805-127C	PIN CLVS .50X1.52 USBL	
21	805-141C	PIN CLVS .63X2.19 USBL	
22	805-363C	PIN COTTER 1/8 X 1	
23	807-236C	SPRING EXT. 1.0ODX5.OLX.095MW	
24	810-555C	CYL 1.5X2.5X.75 ROD W/CLEVIS	
25	811-061C	TE 9/16MJIC 9/16MJIC 9/16FJIC	
26	811-065C	EL 9/16MJIC 9/16MORB	
27	811-442C	HH1/4R2 028 9/16FJIC	
28	818-798C	DECAL WARNING PINCH POINT GEN	
29	841-345C	HH1/4R2 032 9/16FJIC	
30	890-018C	5/16 X 1 1/4 UTILITY CLEVIS	
31	890-018C	5/16 X 1 1/4 UTILITY CLEVIS	
32	890-672C	U-BOLT WIRE ROPE CLP 3/16 GAL.	

SMV Sign

Applies to Models: AFM4216

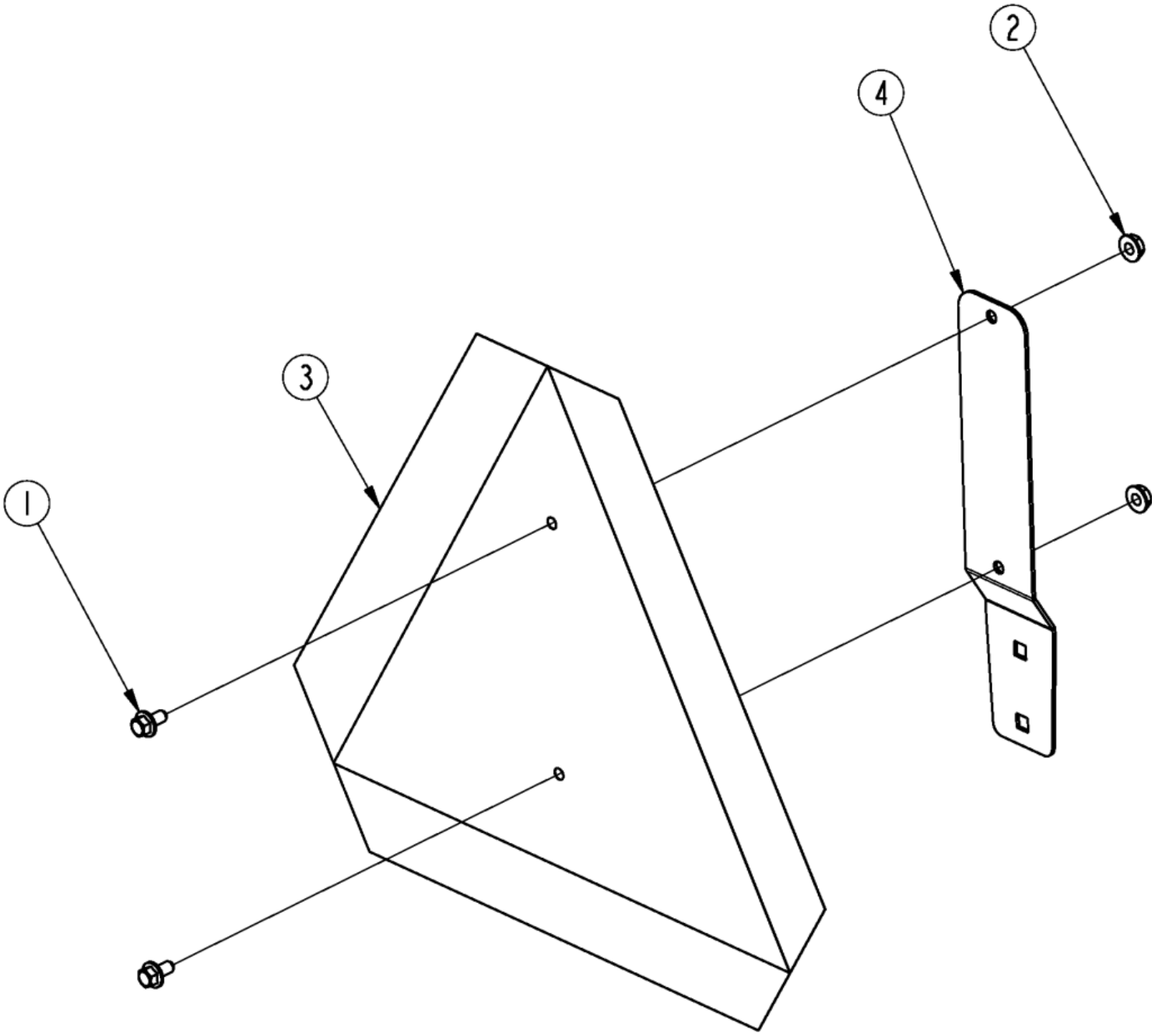

SMV Sign

Applies to Models: AFM4216

Ref.	Part No.	Part Description	Comments
	DWG 37482	Image No.	
	316-362S	SMV SIGN	Complete assembly
		*	
1	802-148C	HFSS 1/4-20X1/2 GR5	
2	803-230C	NUT HEX FLANGE 1/4-20 PLT	
3	818-055C	DECAL SLOW MOVING-GALV. BACKED	
4	890-153C	SMV MOUNTING BLADE	

Decal Placement Decks

Applies to Models: AFM4216

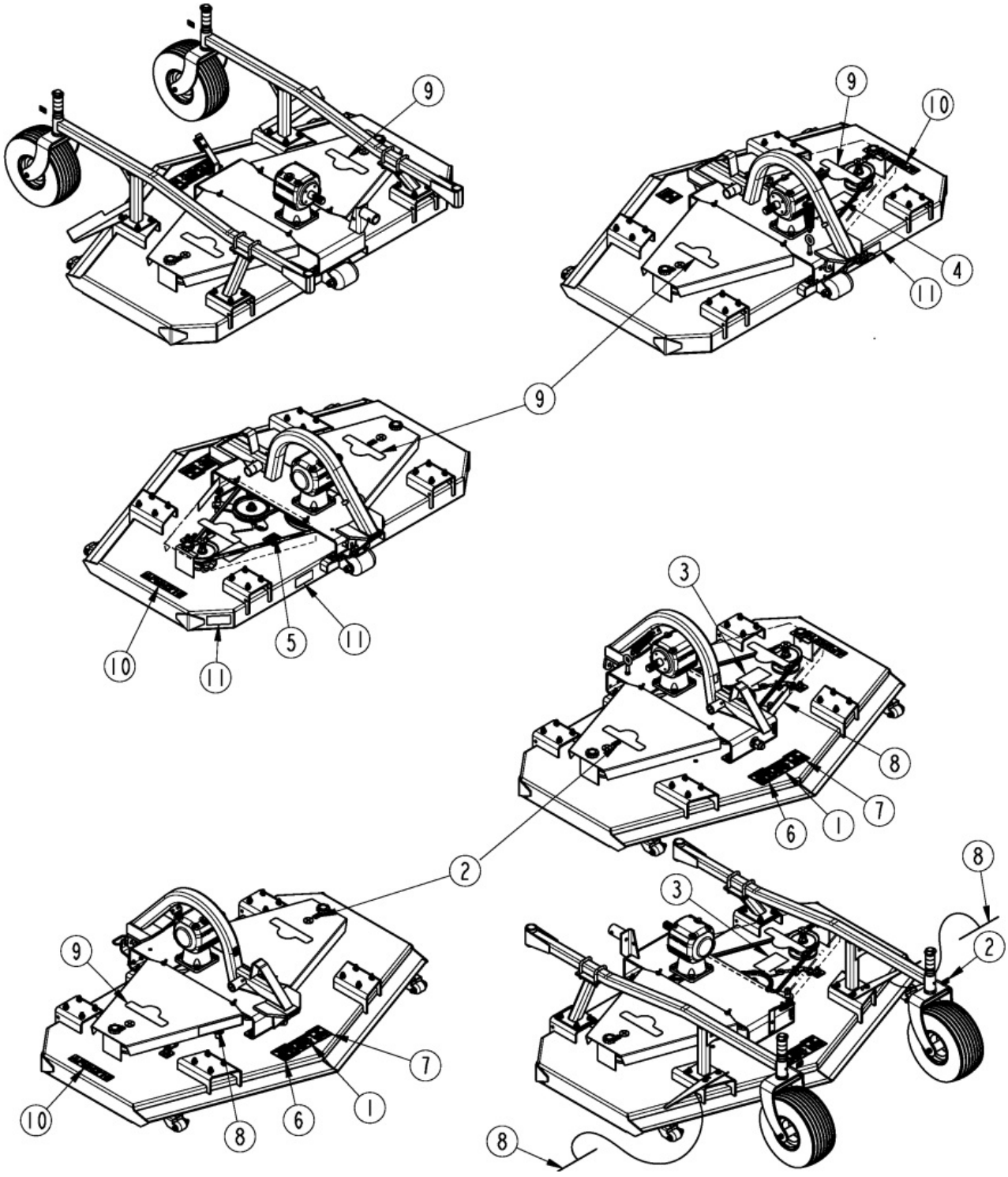

Decal Placement Decks

Applies to Models: AFM4216

Ref.	Part No.	Part Description	Comments
	DWG 25942	Drawing Image Number	
1	818-045C	DECAL WARNING PINCH PT/CRUSH	
2	818-298C	DECAL GREASE 25HRS BLACK/WHITE	
3	818-513C	DECAL CAUT V-BLT INST(RH&C)CCW	
4	818-514C	DECAL CAUT V-BELT INST LH CW	
5	818-543C	DECAL DANGER PD GUARD MISS SML	
6	818-555C	DECAL DANGER ROTATE BLADE	
7	818-556C	DECAL DANGER THROWN OBJ CUTTER	
8	838-614C	DECAL REFLECTOR RED 2X9	S/N 827218+ (on belt guard S/N _____-)
8	818-335C	DECAL RED NARROW REFLECTOR	S/N _____-
8	818-230C	DECAL RED REFLECTOR	S/N _____-
9	838-963C	DECAL LP 10" W/TREE BROWN/GOLD	
10	848-022C	DECAL AFM4216 - GOLD	
10	848-023C	RPBY 848-022C	Obsolete
11	858-096C	DECAL REFLECTOR AMBER 2X4.5	S/N _____+
11	818-229C	DECAL AMBER REFLECTOR	S/N _____-

Decal Placement Transport Frame

Applies to Models: AFM4216

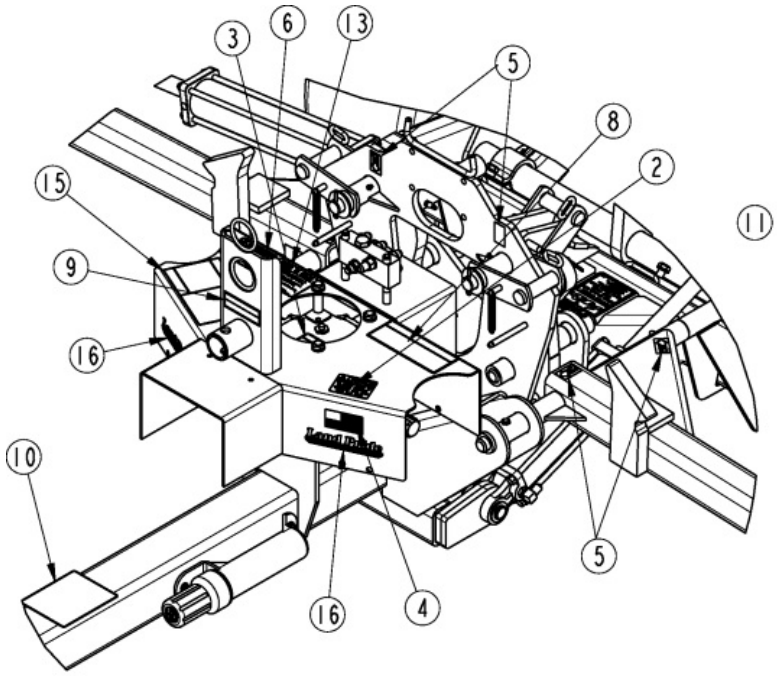

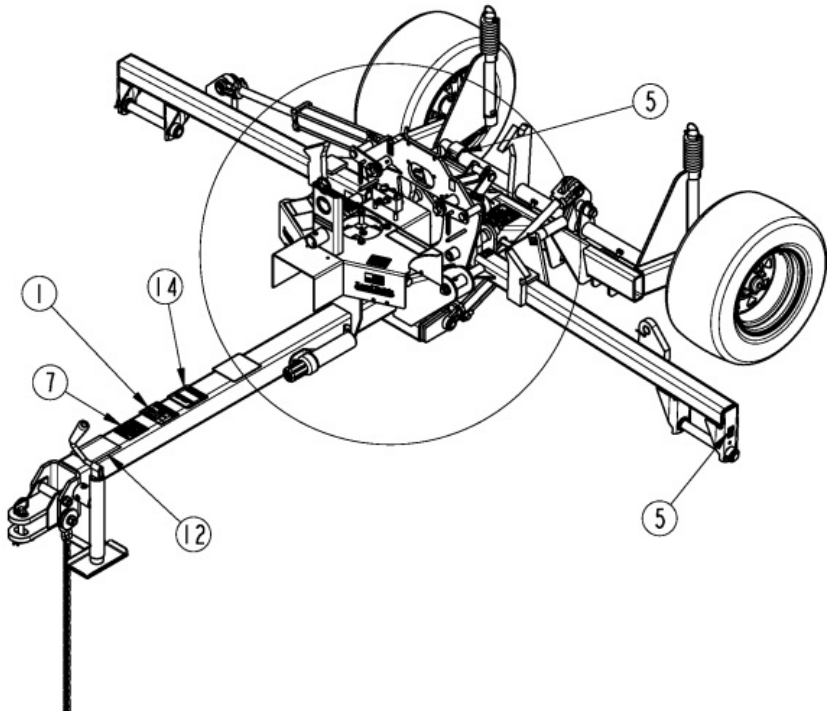

Decal Placement Transport Frame

Applies to Models: AFM4216

Ref.	Part No.	Part Description	Comments
	DWG25928	Drawing Image Number	
1	818-019C	DECAL WARNING NEG TONGUE WT	
2	818-130C	DECAL WARNING 540 RPM	
3	818-187C	DECAL DANGER DRIVELINE SHIELD	
4		DISCONTINUED DECAL	
5	818-298C	DECAL GREASE 25HRS BLACK/WHITE	
6	818-337C	DECAL WARNING 20 MPH TRANS SML	
7	818-339C	DECAL WARNING HIGH PRESSUR SML	
8	818-351C	DECAL CAUTION TRANSP LOCK ENGD	
9	818-353C	DECAL CAUTION TRANSPORT LOCK	
10	818-488C	DECAL PTO MAINTENANCE CV	
11	818-552C	DECAL DANGER PTO DRIVELINE	
12	818-558C	DECAL WARNING GEN SAFE MOWER	
13	818-560C	DECAL NOTICE TO OWNER-NO WARRA	
14	818-561C	DECAL DANGER RAISED WING HAZAR	
15	818-565C	DCAL NOTICE DRVLN TMNG N/CLTCH	
16	838-967C	DECAL LANDPRIDE 6" BROWN/GOLD	

Land Pride Touch-up Paints

Applies to Models: AFM4216

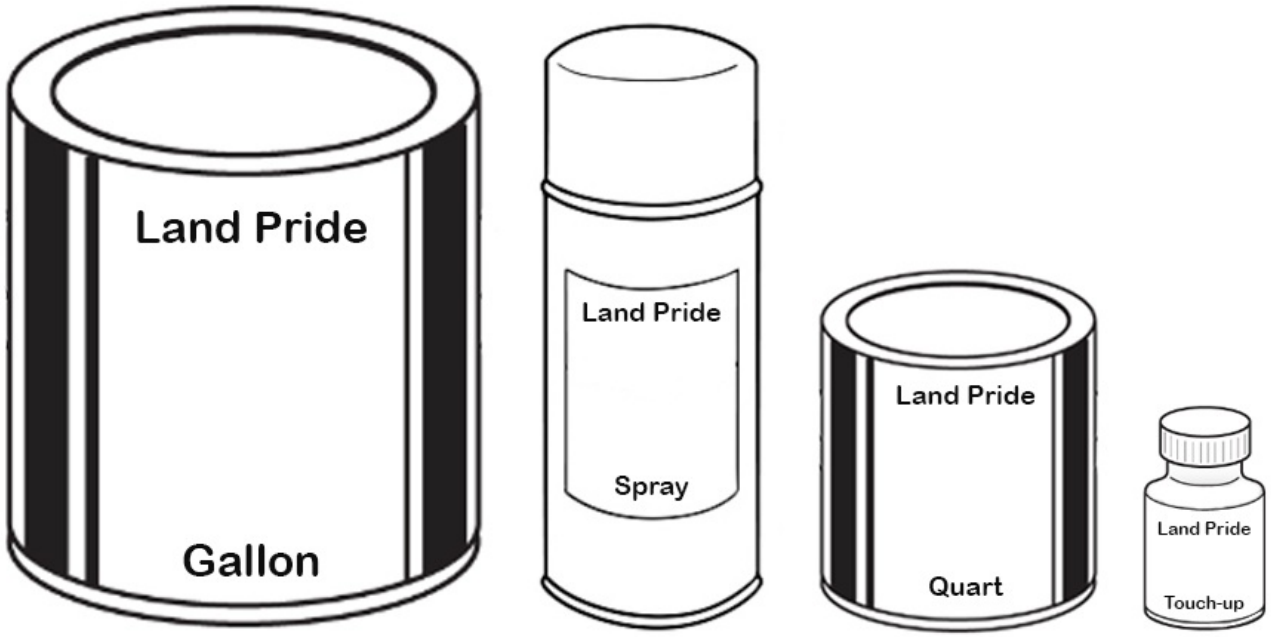

Land Pride Touch-up Paints

Applies to Models: AFM4216

Ref.	Part No.	Part Description	Comments
	DWG 76585	Image No.	
		*	
		Beige	
	821-011C	PAINT LP BEIGE SPRAY CAN	Beige spray can
	821-011CTU	PAINT LP BEIGE TOUCH-UP 4OZ	Beige touch-up bottle with brush
	821-011CQT	PAINT LP BEIGE QUART	Beige quart can
	821-011CGL	PAINT LP BEIGE GALLON	Beige gallon can
		*	
		Orange	
	821-066C	PAINT ORANGE SPRAY CAN	Orange spray can
	821-066CTU	PAINT ORANGE TOUCH-UP 4OZ	Orange touch-up bottle with brush
	821-066CQT	PAINT ORANGE QUART	Orange quart can
	821-066CGL	PAINT ORANGE GALLON	Orange gallon can
		*	
		Black	
	821-070C	PAINT GP GLOSS BLACK SPRAY CAN	Black spray can
	821-070CTU	PAINT GLOSS BLACK TOUCH-UP 4OZ	Black touch-up bottle with brush
	821-070CQT	PAINT GP GLOSS BLACK QUART	Black quart can
	821-070CGL	PAINT GP GLOSS BLACK GALLON	Black gallon can
		*	
		Red	
	821-054C	PAINT MED. RED SPRAY TRCK/CTR	Red spray can
	821-054CTU	PAINT MED RED TOUCH-UP 4OZ	Red touch-up bottle with brush
	821-054CQT	PAINT MED RED QUART	Red quart can
	821-054CGL	PAINT MED RED GALLON	Red gallon can
		*	
		Green	
	821-058C	PAINT GREEN SPRAY CUTTERS	Green spray can
	821-058CTU	PAINT GREEN TOUCH-UP 4OZ	Green touch-up bottle with brush
	821-058CQT	PAINT GREEN QUART	Green quart can
	821-058CGL	PAINT GREEN GALLON	Green gallon can
		*	
		Blue	
	821-067C	PAINT BLUE SPRAY CAN	Blue spray can
	821-067CTU	PAINT BLUE TOUCH-UP 5OZ	Blue touch-up bottle with brush
	821-067CQT	PAINT BLUE QUART	Blue quart can
	821-067CGL	PAINT BLUE GALLON	Blue gallon can
		*	
		Aluminum/Zinc	
	821-080C	PAINT ALUMINUM/ZINC SPRAY CAN	Aluminum/Zinc spray can
	821-080CTU	PAINT ALUMINUM/ZINC TOUCH UP	Aluminum/Zinc touch-up bottle with brush
	821-080CQT	PAINT ALUMINUM/ZINC QUART	Aluminum/Zinc quart can
	821-080CGL	PAINT ALUMINUM/ZINC GALLON	Aluminum/Zinc gallon can

Part Number Index

Part Number	Page
0.195.0300.00	77, 83
0.195.1300.00	77, 83
0.195.2000.00	77, 83
0.195.5000.00	77, 83
0.195.6000.00	77, 83
0.259.7525.00	77, 83
0.278.7103.00	77, 83
010180	79
019519	23
020164	79
020166	79
02-061	81
020614	21
020616	23
020617	23
02-062	81
020692	29
030467	79
030512	79
03-067	81
03-10326	27
03-15450	27
040343	79
040345	79
041065	21
041180	29
043489	29
044321	17, 21, 23, 25
044439	21
045790	29
045793	29
047680	21
047825	29
05-002	81
05-015	81
050170	79
050172	79
0511421-710	13
051172600710	13
051551	29
053314	21, 29
06-012	81
060133	79
060134	79
070218	79
070219	79
07-022	81
070220	79
08-027	81
08-028	81
08-029	81
084099	17
087276	23
087279	21
090099	79
09-013	81
09-049	81
09-100	81
1.195.7100.00	77, 83
1004020	17
10-042	81
1004225	31
1004227	25, 31, 33
1004229	17
1006020	25
1006803	25
1006827	25
1006831	25
1006840	25
1006865	25
1006875	25
10-097	75
1014113	17
11-012	81
1134011	31, 33
1134012	31, 33
1136008	31, 33
1136010	31, 33
12-006	81
120126	79
121.024.760.11	15
121.024.761.11	15
1213233	17
1215733	25
1215735	25
1216907	31
1216914	31, 33
123.340.390.11	15
123.440.760.11	15
127136	23
130146	79
130556	93, 95
13-10021	27
13-10022	27
133836	23
134713	23
134847	23
134953	93, 95
135995	93, 95
140004	79
140017	81
140055	79
141.024.430.1	15
142.240.5227421	15
142.246.2167421	15
142.247.2267421	15
1466001	31, 33
1466305	25
1466607	25, 31
1466707	25, 33
151.014.006.1	15
151.014.007.1	15
151.016.486	15
152.140.3310710	15
1524902	17
1525072	17
153.140.165	15
1546096	25
1548900	25
1581036	25
165.000.628	15
168556	29
1704027	17
1704029	17
1705009	31, 33
1706029	25
1706085	31, 33
172-242D	35, 39
172758	23
175-060D	5
175-061D	5
17543	73
1784210	17
1784211	17
1784212	17
1786710	25
1786711	25
1786801	25
180.014.130	15
180.014.232	15
180.014.233	15
180.014.240	15
180.014.291	15
180.016.483	15
180.016.487	15

Part Number	Page
1806010	31, 33
18-202	81
186561	93, 95
1872901	17
1873901	17
1876902	25
1877902	25
188105	23
1884201	17
1884202	17
1884203	17
1884205	17
1885702	25
1885709	25
1886803	25
190.000.012	15
190.000.014	15
190.000.078	15
190.000.098	15
190.000.099	15
190.000.451	15
190.000.954	15
19-15126	27
196837	21
197644	29
1D0005-1450	87
1D0206-1675	87
1D1003-5	87
1D1155-17	87
1D1401-250	87
1D1505-3	87
1D1551-16275	87
1M6006	89
1M6006-ADI	89
1M6010	85
1M6010-ADI	85
200141	79
200142	79
200199	79
20-028	81
20-029	81
20-047	81
258818	93, 95
26-15120	27
26-15159	27
2A0006	85, 89
2A0012	85, 89
2A0014	97
2A0018	97
2A0022	85, 89
2A0079-616	87
2A0130	97
2A0132	85, 89
2A0202	97
2A0208	85, 89
2A0235-6	87
2A0246-12	87
2A0308-1	87
2A0578-1675	87
2M1190	97
2M3316	89
2M3418	85
304149	29
30-449S6B	13
308-049D	45, 47
308-049D81	45, 47
308-049D82	45, 47
308-049D83	45, 47
308-049D84	45, 47
310-094H	35, 39
310-095H	35, 39
310-224D	35, 39
310-227D	35, 39
310-251D	55, 57, 59, 63, 65, 69
310-252D	55, 57, 59, 63, 65, 69
310-261S	39
310-331D	43, 45, 47
310-359D	55, 57, 59, 63, 65, 69
310-457D	35, 39
310-630D	39
310-631D	35
310-636D	35
310-637D	39
315-103H	39
315-177H	11
315-178H	11
315-182H	11
315-183H	5
315-186H	5, 11
315-198H	11
315-199H	35
315-230H	11
315-231H	11
315-237D	55, 63
315-245D	57, 59, 65, 69
315-246D	57, 59, 65, 69
315-247D	57, 59, 65, 69
315-248D	57, 59, 65, 69
315-259A	35, 39
315-260A	35, 39
315-261A	37, 41
315-274H	7
315-343S	63, 65, 69
315-344S	65, 69
315-369H	7
315-370A	7
315-380S	39
315-381S	35
315-383H	65, 69
315-384H	63, 65, 69
315-420H	5
315-448H	19
315-450H	7
315-468A	37, 41
315-487D	5
315-492D	91
315-563D	35, 39
315-564D	11
315-565D	11
315-566D	45, 47
315-613S	35
315-615H	59, 65, 69
315-615H81	59, 65, 69
315-615H82	59, 65, 69
315-615H83	59, 65, 69
315-615H84	59, 65, 69
315-616S	59, 65, 69
315-616S81	59, 65, 69
315-616S82	59, 65, 69
315-616S83	59, 65, 69
315-616S84	59, 65, 69
315-618H	65
315-618H81	65
315-618H82	65
315-618H83	65

Part Number	Page
315-618H84	65
315-619H	55, 63
315-619H81	55, 63
315-619H82	55, 63
315-619H83	55, 63
315-619H84	55, 63
315-620H	55, 63
315-620H81	55, 63
315-620H82	55, 63
315-620H83	55, 63
315-620H84	55, 63
315-648H	57, 65
315-648H81	57, 65
315-648H82	57, 65
315-648H83	57, 65
315-648H84	57, 65
315-649S	65
315-649S81	65
315-649S82	65
315-649S83	65
315-649S84	65
315-668S	59
315-676H	49
315-688H	49
315-688H81	49
315-688H82	49
315-688H83	49
315-688H84	49
315-689H	49
315-689H81	49
315-689H82	49
315-689H83	49
315-689H84	49
315-696H	45, 47
315-696H81	45, 47
315-696H82	45, 47
315-696H83	45, 47
315-696H84	45, 47
315-697H	43
315-697H81	43
315-697H82	43
315-697H83	43
315-697H84	43
315-698H	45, 47
315-701H	59
315-702S	55, 59
315-703H	55, 59
315-705S	57, 59
315-706H	57, 59
315-707S	55, 57, 59
315-708H	55, 57, 59
315-709S	57, 59
315-709S81	57, 59
315-709S82	57, 59
315-709S83	57, 59
315-709S84	57, 59
315-710H	57, 59
315-710H81	57, 59
315-710H82	57, 59
315-710H83	57, 59
315-710H84	57, 59
315-711S	57
315-711S81	57
315-711S82	57
315-711S83	57
315-711S84	57
315-712H	57
315-712H81	57
315-712H82	57
315-712H83	57
315-712H84	57
315-717H	55
315-717H81	55
315-717H82	55
315-717H83	55
315-717H84	55
315-722A	99
315-723H	99
315-724S	99
315-725S	99
315-726V	99
315-727V	99
315-728H	99
315-733D	55, 63
315-737H	59, 69
315-737H81	59, 69
315-737H82	59, 69
315-737H83	59, 69
315-737H84	59, 69
315-740H	59
315-740H81	59
315-740H82	59
315-740H83	59
315-740H84	59
315-743D	91
315-743V	43
315-745A	19
315-747K	9
315-751D	35
315-752D	39
315-753D	7
315-754D	7
315-768D	63, 65, 69
315-787H	51
315-788L	51
315-802H	53
315-803L	53
315-811H	19
315-821D	7
315-963D	49
315-982D	49
316201	23
316-362S	101
332-009D	99
332-011H	19
332-016D	55, 63
332-017D	55, 63
332-030D	7
332-104D	19
332-107D	19
332-115D	19
338531	29
341953	29
355154	21
355155	23
357-487D	55, 57, 59
359471	21, 23
365305	21, 23
365722	23
371183	23
371629	23
377234	21
377240	21
380371	21, 23
380905	21
381495	29
381908	21, 23
381957	29
383231	23
385954	23
387266	21
387332	21
388138	23
390289	21
390404	21, 23

Part Number	Page
392050	21
392052	21
393500	23
395453	23
3A3102	89
3M1108	97
3M3310	89
3R0310	89
3R0406	85
401-372D	7
45-10050	27
47616	73
491668	95
491672	93
492107	75
492218	95
492222	93
492647	93
492650	93, 95
492688	93, 95
492699	95
494286	93
494391	95
4M1102	97
4M3102	85, 89
4M3108	85, 89
574353	13
5M3116	89
5M3120	85
6040816	31
6040818	31, 33
6280313	25
6330855	17
6330860	17
6331070	25
6331080	25
6402901	31, 33
6560006	17
6560208	23
6561306	17, 25
695580	23
6M3118	85
6M3126	89
6R0130	85
6R0150	89
6R0150-ADI	89
7M1302	97
7M3316	89
7M3320	85

Part Number	Page
8.0.9.00026	77, 83
8.0.9.00102	77, 83
8.1.1.00501	77, 83
8.2.2.01144	43, 45, 47, 77, 83
8.3.2.00409	43, 45, 47, 77, 83
8.4.7.00516	77, 83
8.5.1.00680	77, 83
8.5.2.00131	77, 83
8.5.3.00955	77, 83
8.6.5.00006	77, 83
8.7.0.00744	77, 83
8.7.1.00152	77, 83
8.7.3.00055	77, 83
8.7.3.00081	77, 83
800-001C	5, 11, 35, 39, 45, 47, 55, 57, 59, 63, 65, 69
800-058C	11, 71
800-060C	51, 53, 91
800-080C	5, 11, 45, 47
800-099C	35, 39
800-130C	35, 39
800-136C	11
800-264C	77, 83
800-372C	35, 39
801-018C	43
801-021C	51, 53
801-023C	93, 95
802-005C	43, 51
802-017C	49
802-022C	99
802-023C	85, 89, 99
802-034C	51, 53, 55, 59, 63, 69
802-041C	49
802-060C	7
802-079C	45, 47, 91
802-091C	5, 51, 55, 57, 59, 63, 65, 69
802-092C	43
802-095C	7
802-099C	7, 57, 65

Part Number	Page
802-114C	55, 63, 65, 69
802-115C	11
802-148C	101
802-152C	5
802-155C	99
802-159C	79
802-203C	43, 45, 47
802-205C	7
802-226C	19
802-229C	35, 39
802-235C	7
802-239C	35, 39
802-246C	43, 45, 47
802-269C	55, 57, 61
802-280C	7
802-281C	35, 39
802-283C	7
802-308C	91
802-314C	43, 45, 47
802-329C	35, 39
802-345C	45, 47
802-360C	7
802-408C	45, 47
802-451C	91
802-469C	7
802-488C	19
802-551C	45, 47
802-567C	35, 39
8026	91
802-660C	91
802-689C	19
802-695C	39
802-696C	35
803-006C	91
803-007C	5, 45, 47
803-011C	11
803-013C	55, 63, 65, 69
803-014C	35, 39, 45, 47, 49, 91, 93, 95, 99
803-019C	7, 49
803-020C	45, 47, 55, 57, 61
803-022C	35, 39, 43, 45, 47

Part Number	Page
803-027C	7
803-037C	43, 45, 47
803-038C	7, 45, 47
803-043C	43
803-053C	13, 63, 65, 69
803-068C	99
803-078C	99
803-114C	39, 49, 85, 89
803-115C	35, 39
803-119C	35, 39
803-148C	7
803-159C	13, 63, 65, 71
803-169C	51, 53, 55, 57, 61, 63, 65, 69
803-228C	35
803-230C	101
803-231C	49
803-234C	85, 89
803-255C	51
803-268C	51, 53
803-293C	43
803-308C	35, 39
804-006C	7, 91
804-007C	7, 51
804-009C	43, 45, 47, 79
804-010C	43, 45, 47
804-012C	49, 91, 99
804-013C	45, 47, 49, 91, 99
804-014C	35, 39
804-015C	5, 19, 45, 47, 55, 57, 61
804-016C	5, 51, 55, 57, 61, 63, 67, 69, 99
804-017C	99
804-019C	7
804-021C	99
804-022C	35, 39, 43, 45, 47
804-023C	7
804-024C	99
804-025C	13, 63, 65, 69
804-028C	7
804-029C	5
804-093C	35, 39
804-110C	35, 39
804-158C	81
804-237C	7
805-004C	5, 11, 91
805-010C	19
805-015C	55, 57, 61, 63, 65, 69
805-017C	5, 11
805-032C	87
805-045C	5, 11, 13, 63, 65, 69
805-065C	55, 63
805-081C	7
805-088C	7, 91
805-124C	85, 89
805-127C	99
805-131C	5, 11
805-141C	99
805-175C	45, 47
805-299C	19
805-363C	99
806-023C	55, 63
807-023C	91
807-026C	5, 11
807-050C	45, 47
807-068C	35, 39
807-176C	43
807-236C	99
807-364C	43
808-073C	35, 39
808-127C	35, 39
808-128C	35, 39
808-129C	35, 39
808-335C	43, 45, 47
810-150C	11, 85, 87, 91, 93
810-177C	85
810-178C	87
810-200C	5, 89, 91, 95
810-210C	89
810-249C	97
810-491C	97
810-555C	97, 99
810-886C	93, 95
811-061C	99
811-065C	91, 99
811-170C	91
811-394C	91
811-441C	91
811-442C	91, 99
811-443C	91
811-444C	91
811-445C	91
811-495C	91
811-694C	91
814-100C	13
814-118C	63, 67, 69, 75
814-357C	55, 57, 61, 73
814-382C	13
814-408C	63, 67, 75
814-409C	75
815-052C	13
815-104C	63, 65, 69, 71
816-014C	13, 63, 67, 71
816-141C	35, 39
816-298C	49
816-504C	7
817-028C	35, 39
817-082C	49
817-195C	49
817-259C	49
817-358C	49
818-019C	105
818-045C	103
818-055C	43, 101
818-130C	105
818-187C	105
818-229C	103
818-230C	103
818-298C	103, 105
818-335C	103
818-337C	105
818-339C	105
818-351C	105
818-353C	105
818-488C	105
818-513C	103
818-514C	103
818-540C	17, 21, 23, 25
818-543C	103

Part Number	Page
818-552C	17, 21, 23, 25, 105
818-555C	103
818-556C	103
818-558C	105
818-560C	105
818-561C	105
818-565C	105
818-798C	99
821-011C	107
821-011CGL	107
821-011CQT	107
821-011CTU	107
821-054C	107
821-054CGL	107
821-054CQT	107
821-054CTU	107
821-058C	107
821-058CGL	107
821-058CQT	107
821-058CTU	107
821-066C	107
821-066CGL	107
821-066CQT	107
821-066CTU	107
821-067C	107
821-067CGL	107
821-067CQT	107
821-067CTU	107
821-070C	107
821-070CGL	107
821-070CQT	107
821-070CTU	107
821-080C	107
821-080CGL	107
821-080CQT	107
821-080CTU	107
822-006C	35, 39
822-030C	13, 63, 67, 71
822-080C	13, 63, 67, 71
822-161C	35, 39
822-166C	77, 83
822-167C	77, 79, 83
822-191C	81
826-111C	19, 21
826-143C	19, 23
826-240C	43, 45, 47
826-274C	19, 79, 81
826-326C	45, 77
826-327C	43, 47, 83
826-370C	19, 25
826-371C	15, 17, 19
826-487C	43, 45, 47, 77, 83
826-488C	43, 45, 47, 77, 83
826-552C	17
826-573C	25
826-597C	21
826-604C	23
826-842C	19, 27
836-189C	19
836-202C	19
836-244C	19
838-614C	51, 53, 103
838-963C	103
838-967C	105
841-345C	99
843-159C	53
843-208C	53
843-209C	53
843-211C	53
843-234C	53
843-236C	53
848-022C	103
848-023C	103
858-096C	103
86810-1008	27
87040	73
87412	73
87414	73
890-005C	5, 11
890-018C	99
890-118C	7
890-122C	45, 47
890-153C	101
890-172C	39
890-182C	7
890-200C	39
890-202C	55, 57, 61, 63, 67, 69
890-278C	11
890-318C	39
890-319C	35
890-332C	9
890-337C	9
890-366C	35
890-367C	35
890-401C	43
890-589C	9
890-614C	13, 63, 67, 71
890-672C	99
890-698C	39
890-699C	35
891-246C	7
891-522C	51
891-523C	51
891-529C	51
891-531C	51
891-533C	51
90-26711	27
9190601	25
92-26711	27
93-26711	27
94412	73
96-26711	27
97-26711	27
98-26711	27
990-109R	35, 39
99-26711	27
A.195.000	77, 83
A.248.500	77, 83
A244.501	77, 83
BO-47	13, 63, 67, 71
DWG 10600	29
DWG 13449	21
DWG 13562	91
DWG 13812	23
DWG 19550	83
DWG 22023	25
DWG 23890	31
DWG 25899	93
DWG 25901	95
DWG 25909	5
DWG 25910	7
DWG 25911	11
DWG 25934	43
DWG 25935	45
DWG 25936	47
DWG 25938	55
DWG 25940	63
DWG 25942	103

Part Number	Page
DWG 30000	77
DWG 30274	81
DWG 37439	71
DWG 37440	59
DWG 37441	69
DWG 37482	101
DWG 39402	27
DWG 70100	51
DWG 70127	99
DWG 72684	53
DWG 72828	15
DWG 76585	107
DWG 78253	89
DWG 78268	87
DWG 78269	85
DWG 79170	73
DWG13552	9
DWG13589	13
DWG18259	79
DWG22022	17
DWG25926	75
DWG25928	105
DWG25931	19
DWG25932	35
DWG25933	39
DWG25937	49
DWG25939	57
DWG25941	65
DWG30917	33
DWG35483	97
J-37-A	51
J-37-R	51
J-AC1-15-B	51
N/A	85, 87, 89, 93, 97
TR-412	13, 75
U0.195.7101.00	77, 83

Great Plains Manufacturing, Inc.
Corporate Office: P.O. Box 5060
Salina, Kansas 67402-5060 USA

www.landpride.com