Table of Contents

Broadcast Spreaders

PTS500 & PTS700 (Pull-Type)

30657

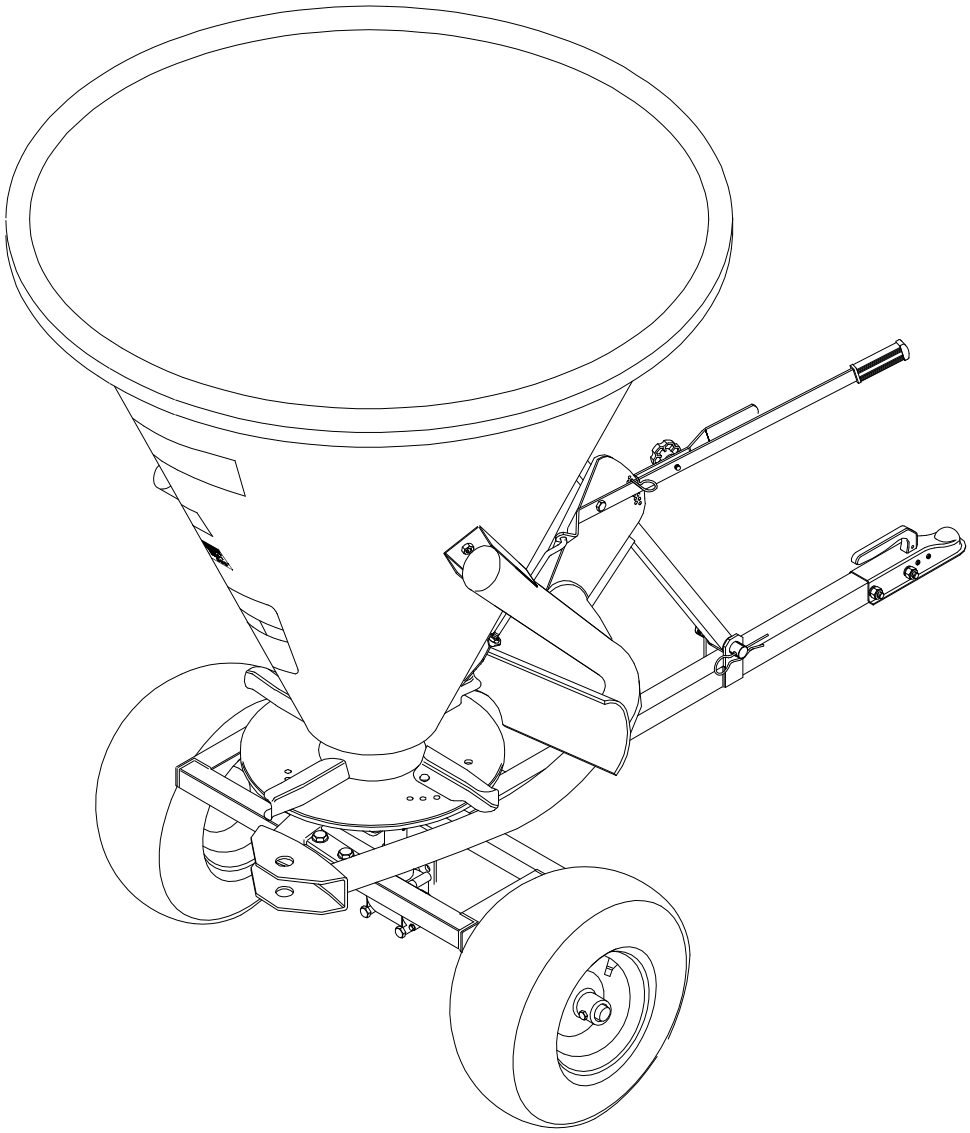

309-125M
Operator's Manual

Read the Operator's Manual entirely. When you see this symbol, the subsequent instructions and warnings are serious - follow without exception. Your life and the lives of others depend on it!

Cover photo may show optional equipment not supplied with standard unit.

For an Operator's Manual and Decal Kit in French Language, please see your Land Pride dealer.

Printed 11/22/23

Machine Identification

Record your machine details in the log below. If you replace this manual, be sure to transfer this information to the new manual.

If you, or the dealer, have added Options not originally ordered with the machine, or removed Options that were originally ordered, the weights and measurements are no longer accurate for your machine. Update the record by adding the machine weight and measurements provided in the Specifications & Capacities Section of this manual with the Option(s) weight and measurements.

Model Number	
Serial Number	
Machine Height	
Machine Length	
Machine Width	
Machine Weight	
Delivery Date	
First Operation	
Accessories	_____ _____ _____

Dealer Contact Information

Name: _____

Street: _____

City/State: _____

Telephone: _____

Email: _____

California Proposition 65

⚠ **WARNING**: Cancer and reproductive harm - www.P65Warnings.ca.gov

Important Safety Information 1
Safety at All Times 1
Look for the Safety Alert Symbol 1
Safety Labels 4
Introduction 6
Application 6
Using This Manual 6
Owner Assistance 6
Serial Number 6
Section 1: Assembly & Set-up 7
Hitch Requirements 7
Torque Requirements 7
Grease Zerks 7
Axles & Gearbox 7
Hopper Frame 8
Tongue 8
Wheels & Drive Shaft Bearing 9
Spreader Disc 9
Poly Hopper 9
Gate Lift 10
Ball Hitch Hook-up 11
Section 2: Operation 13
Operating Checklist 13
Safety Information 13
Transporting 14
Initial Adjustments and Checks 14
Calibrate Hopper Discharge Rate 14
Field Application 15
General Operating Instructions 15
Section 3: Adjustments 16
Telescopic Arm Adjustment 16
Dispersal Pattern 16
Right Side Dispersal, View (A) in Figure 3-3 . . . 16
Full Width Dispersal, View (B) in Figure 3-3 16
Left Side Dispersal, View (C) in Figure 3-3 16
Distributor Vane Adjustment 17
English Spreading Chart for Fertilizer & Seed* . . . 18
Metric Spreading Chart for Fertilizer & Seed* 20
Section 4: Accessories 22
Polyester Hopper Cover 22
Section 5: Maintenance & Lubrication 23
General Maintenance 23
Long-Term Storage 23
Lubrication Points 24
Axle Connection 24
Axle Bearings 24
Ball Hitch 24
Gearbox 24
Section 6: Specifications & Capacities 25
Section 7: Features & Benefits 26
Section 8: Troubleshooting 27
Section 9: Torque & Tire Inflation Chart 28
Section 10: Warranty 29

Please take our Customer Satisfaction SURVEY at landpride.com

© Copyright 2023 All rights Reserved

Land Pride provides this publication "as is" without warranty of any kind, either expressed or implied. While every precaution has been taken in the preparation of this manual, Land Pride assumes no responsibility for errors or omissions. Neither is any liability assumed for damages resulting from the use of the information contained herein. Land Pride reserves the right to revise and improve its products as it sees fit. This publication describes the state of this product at the time of its publication, and may not reflect the product in the future.

Land Pride is a registered trademark.

All other brands and product names are trademarks or registered trademarks of their respective holders.

Printed in the United States of America.

See previous page for Table of contents.

Parts Manual QR Locator

The QR (Quick Reference) code on the left will take you to the Parts Manual for this equipment. Download the appropriate app on your smart phone. Scan the QR code and take a picture.

Dealer QR Locator

The QR code on the left will link you to available dealers for Land Pride products. Refer to Parts Manual QR Locator on this page for detailed instructions.

Listed below are common practices that may or may not be applicable to the products described in this manual.

Safety at All Times

Careful operation is your best assurance against an accident.

All operators, no matter how much experience they may have, should carefully read this manual and other related manuals before operating the power machine and this implement.

- ▲ Thoroughly read and understand the "Safety Label" section. Read all instructions noted on them.
- ▲ Do not operate the equipment while under the influence of drugs or alcohol, as they impair your ability to safely and properly operate the equipment.
- ▲ The operator should be familiar with all functions of the tractor and attached implement, and be able to handle emergencies quickly.
- ▲ Make sure all guards and shields appropriate for the operation are in place and secured before operating the implement.
- ▲ Keep all bystanders away from equipment and work area.
- ▲ Start tractor from the driver's seat with hydraulic controls in neutral.
- ▲ Operate tractor and controls from the driver's seat only.
- ▲ Never dismount from a moving tractor or leave tractor unattended with engine running.
- ▲ Do not allow anyone to stand between the implement and tractor while backing up to the implement.
- ▲ Keep hands, feet, and clothing away from power-driven parts.
- ▲ While transporting and operating equipment, watch out for objects overhead and along the sides such as fences, trees, buildings, wires, etc.
- ▲ Do not turn tractor so tight as to cause hitched implement to ride up on the tractor's rear wheel.
- ▲ Store implement in a safe and secure area where children normally do not play. When needed, secure implement against falling with support blocks.

Look for the Safety Alert Symbol

The SAFETY ALERT SYMBOL indicates there is a potential hazard to personal safety and extra precaution must be taken. When you see this symbol, be alert and carefully read the message that follows it. Hazard control, and accident prevention are dependent upon the awareness, concern, prudence, and proper training of personnel involved in the operation, transport, maintenance, and storage of equipment.

Be Aware of Signal Words

A signal word designates a degree or level of hazard seriousness. They are:

DANGER: Indicates a hazardous situation that, if not avoided, will result in death or serious injury.

WARNING: Indicates a hazardous situation that, if not avoided, could result in death or serious injury.

CAUTION: Indicates a hazardous situation that, if not avoided, may result in minor or moderate injury.

Be Aware of Special Notices

Special notices are intended to point out important and helpful information that should be followed. They are usually placed inside a box. They are:

IMPORTANT: Indicates that equipment or property damage could result if instructions are not followed.

NOTE: Indicates supplementary explanations that will be helpful when using the equipment.

Safety Precautions for Children

Tragedy can occur if the operator is not alert to the presence of children, Children generally are attracted to implements and their work.

- ▲ Never assume children will remain where you last saw them.
- ▲ Keep children out of the work area and under the watchful eye of a responsible adult.
- ▲ Be alert and shut the implement and tractor down if children enter the work area.
- ▲ Never carry children on the tractor or implement. There is not a safe place for them to ride. They may fall off and be run over or interfere with the control of the power machine.
- ▲ Never allow children to operate the power machine, even under adult supervision.
- ▲ Never allow children to play on the power machine or implement.
- ▲ Use extra caution when backing up. Before the tractor starts to move, look down and behind to make sure the area is clear.

Tractor Shutdown & Storage

- ▲ If engaged, disengage power take-off.
- ▲ Park on solid, level ground and lower implement to ground or onto support blocks.
- ▲ Put tractor in park or set park brake.
- ▲ Turn off engine and remove ignition key to prevent unauthorized starting.
- ▲ Relieve all hydraulic pressure to auxiliary hydraulic lines.
- ▲ Wait for all components to stop before leaving operator's seat.
- ▲ Use steps, grab-handles and anti-slip surfaces when stepping on and off the tractor.

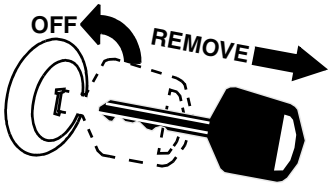

Listed below are common practices that may or may not be applicable to the products described in this manual.

Use A Safety Chain

- ▲ A safety chain will help control drawn machinery should it separate from the tractor drawbar.
- ▲ Use a chain with the strength rating equal to or greater than the gross weight of the towed implement.
- ▲ Attach the chain to the tractor drawbar support or other specified anchor location. Allow only enough slack in the chain to permit turning.
- ▲ Always hitch the implement to the machine towing it. Do not use the safety chain to tow the implement.

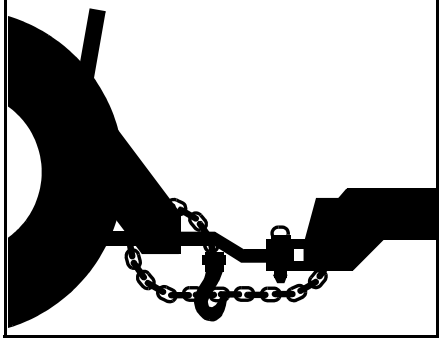

Towing Safely

- ▲ Comply with federal, state, and local laws.
- ▲ Use towing vehicle and trailer of adequate size and capacity. Secure equipment towed on a trailer with chocks, tie downs, and chains.
- ▲ **IMPORTANT:** Do not tow a load that is more than double the weight of the vehicle towing the load.
- ▲ Sudden braking can cause a towed trailer to swerve unexpectedly. Reduce speed if trailer is not equipped with brakes.

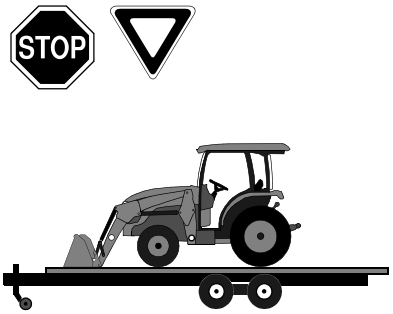

Transport Safely

- ▲ Comply with federal, state, and local laws.
- ▲ Avoid contact with any overhead utility lines or electrically charged conductors.
- ▲ Engage park brake when stopped on an incline.
- ▲ Maximum transport speed for an implement is 20 mph (32 km/h). DO NOT EXCEED.
- ▲ Never travel at a speed which does not allow adequate control of steering and stopping. Some rough terrains require a slower speed. Sudden braking can cause a towed load to swerve and upset.
- ▲ Do not tow an implement that, when fully loaded, weights more than 1.5 times the weigh of towing vehicle.

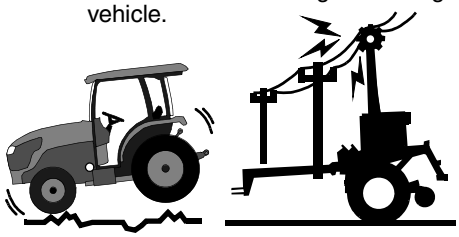

Tire Safety

- ▲ Tire changing can be dangerous and must be performed by trained personnel using the correct tools and equipment.
- ▲ Always properly match the wheel size to the properly sized tire.
- ▲ Always maintain correct tire pressure. Do not inflate tires above recommended pressures shown in the Operator's Manual.
- ▲ When inflating tires, use a clip-on chuck and extension hose long enough to allow you to stand to one side and NOT in front of or over the tire assembly. Use a safety cage if available.
- ▲ Securely support the implement when changing a wheel.
- ▲ When removing and installing wheels, use wheel handling equipment adequate for the weight involved.
- ▲ Make sure wheel bolts have been tightened to the specified torque.

Practice Safe Maintenance

- ▲ Understand procedure before doing work. Refer to the Operator's Manual for additional information.
- ▲ Work on a level surface in a clean dry area that is well-lit.
- ▲ Lower implement to the ground and follow all shutdown procedures before leaving the operator's seat to perform maintenance.
- ▲ Do not work under any hydraulically supported equipment. It can settle, suddenly leak down, or be lowered accidentally. If it is necessary to work under the equipment, securely support it with stands or suitable blocking beforehand.
- ▲ Use properly grounded electrical outlets and tools.
- ▲ Use correct tools and equipment for the job that are in good condition.
- ▲ Allow equipment to cool before working on it.
- ▲ Disconnect battery ground cable (-) before servicing or adjusting electrical systems or before welding on implement.
- ▲ Inspect all parts. Make certain parts are in good condition & installed properly.
- ▲ Replace parts on this implement with genuine Land Pride parts only. Do not alter this implement in a way which will adversely affect its performance.
- ▲ Do not grease or oil implement while it is in operation.
- ▲ Remove buildup of grease, oil, or debris.
- ▲ Always make sure any material and waste products from the repair and maintenance of the implement are properly collected and disposed.
- ▲ Remove all tools and unused parts from equipment before operation.
- ▲ Do not weld or torch on galvanized metal as it will release toxic fumes.

Listed below are common practices that may or may not be applicable to the products described in this manual.

Prepare for Emergencies

- ▲ Be prepared if a fire starts.
- ▲ Keep a first aid kit and fire extinguisher handy.
- ▲ Keep emergency numbers for doctor, ambulance, hospital, and fire department near the phone.

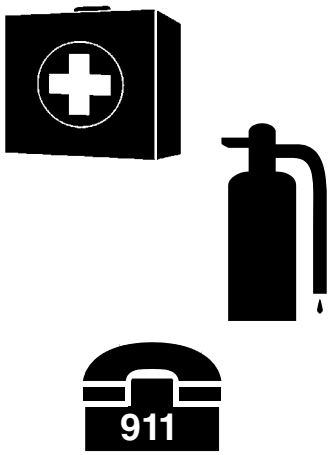

Wear Personal Protective Equipment (PPE)

- ▲ Wear protective clothing and equipment appropriate for the job such as safety shoes, safety, glasses, hard hat, dust mask, and ear plugs.
- ▲ Clothing should fit snug without fringes and pull strings to avoid entanglement with moving parts.
- ▲ Prolonged exposure to loud noise can cause hearing impairment or hearing loss. Wear suitable hearing protection such as earmuffs or earplugs.
- ▲ Operating a machine safely requires the operator's full attention. Avoid wearing headphones while operating equipment.

Avoid High Pressure Fluids

- ▲ Escaping fluid under pressure will penetrate the skin or eyes causing serious injury.
- ▲ Relieve all residual pressure before disconnecting hydraulic lines or performing work on the hydraulic system.
- ▲ Make sure all hydraulic fluid connections are properly tightened/torqued and all hydraulic hoses and lines are in good condition before applying pressure to the system.
- ▲ Use a piece of paper or cardboard, NOT BODY PARTS, to check for suspected leaks.
- ▲ Wear protective gloves and safety glasses or goggles when working with hydraulic systems.
- ▲ **DO NOT DELAY.** If an accident occurs, seek immediate emergency medical care or gangrene may result.

Use Safety Lights and Devices

- ▲ A slow moving power machine can create a hazard when driven on public roads. They are difficult to see, especially at night.
- ▲ Flashing warning lights and turn signals are recommended whenever driving on public roads.
- ▲ For tractors and other agriculture equipment, a Slow Moving Vehicle (SMV) sign is required when traveling on public roads.

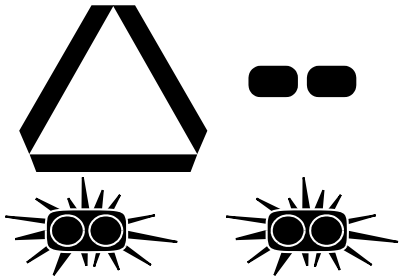

Use Seat Belt and ROPS

- ▲ Land Pride recommends the use of a CAB or roll-over-protective-structures (ROPS) and seat belt in almost all power machines. Combination of a CAB or ROPS and seat belt will reduce the risk of serious injury or death if the power machine should be upset.
- ▲ If ROPS is in the locked-up position, fasten seat belt snugly and securely to help protect against serious injury or death from falling and machine overturn.

Keep Riders Off Machinery

- ▲ Never carry riders on the tractor or implement.
- ▲ Riders obstruct operator's view and interfere with the control of the power machine.
- ▲ Riders can be struck by objects or thrown from the equipment.
- ▲ Never use the tractor or implement to lift or transport riders.

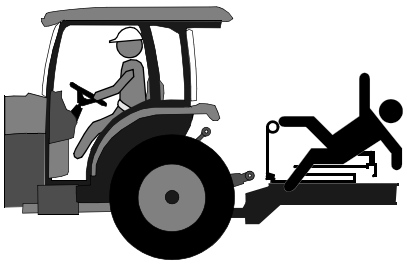

Listed below are common practices that may or may not be applicable to the products described in this manual.

Avoid Crystalline Silica (Quartz) Dust

Because crystalline silica is a basic component of sand and granite, many activities at construction sites produce dust containing crystalline silica. Trenching, sawing, and boring of material containing crystalline silica can produce dust containing crystalline silica particles. This dust can cause serious injury to the lungs (silicosis).

There are guidelines which should be followed if crystalline silica (quartz) is present in the dust.

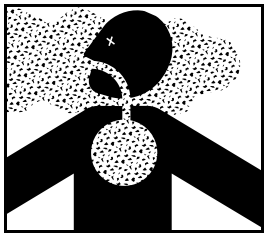

- ▲ Be aware of and follow OSHA (or other local, State, or Federal) guidelines for exposure to airborne crystalline silica.
- ▲ Know the work operations where exposure to crystalline silica may occur.
- ▲ Participate in air monitoring or training programs offered by the employer.
- ▲ Be aware of and use optional equipment controls such as water sprays, local exhaust ventilation, and enclosed cabs with positive pressure air conditioning if the machine has such equipment. Otherwise respirators shall be worn.
- ▲ Where respirators are required, wear a respirator approved for protection against crystalline silica containing dust. Do not alter respirator in any way. Workers who use tight-fitting respirators can not have beards/ mustaches which interfere with the respirator seal to the face.
- ▲ If possible, change into disposable or washable work clothes at the work site; shower and change into clean clothing before leaving the work site.
- ▲ Do not eat, drink, use tobacco products, or apply cosmetics in areas where there is dust containing crystalline silica.
- ▲ Store food, drink, and personal belongings away from the work area.
- ▲ Wash hands and face before eating, drinking, smoking, or applying cosmetics after leaving the exposure area.

Handle Chemicals Properly

- ▲ Protective clothing should be worn.
- ▲ Handle all chemicals with care.
- ▲ Follow instructions on container label.
- ▲ Agricultural chemicals can be dangerous. Improper use can seriously injure persons, animals, plants, soil, and property.
- ▲ Inhaling smoke from any type of chemical fire can be a serious health hazard.
- ▲ Store or dispose of unused chemicals as specified by the chemical manufacturer.

Dig Safe - Avoid Underground Utilities

- ▲ USA: Call 811
  CAN:
  http://www.clickbeforeyoudig.com
- ▲ Always contact your local utility companies (electrical, telephone, gas, water, sewer, and others) before digging so that they may mark the location of any underground services in the area.
- ▲ Be sure to ask how close you can work to the marks they positioned.

This page left blank intentionally.

Safety Labels

Your Broadcast Spreader comes equipped with all safety labels in place. They were designed to help you safely operate your implement. Read and follow their directions.

1. *Keep all safety labels clean and legible.*
2. *Refer to this section for proper label placement. Replace all damaged or missing labels. Order new labels from your nearest Land Pride dealer. To find your nearest dealer, visit our dealer locator at www.landpride.com.*
3. *Some new equipment installed during repair requires safety labels to be affixed to the replaced component as specified by Land Pride. When ordering new components make sure the correct safety labels are included in the request.*
4. *Refer to this section for proper label placement.*
   To install new labels:
   a. *Clean surface area where label is to be placed.*
   b. *Spray soapy water onto the cleaned area.*
   c. *Peel backing from label and press label firmly onto the surface.*
   d. *Squeeze out air bubbles with edge of a credit card or with a similar type of straight edge.*

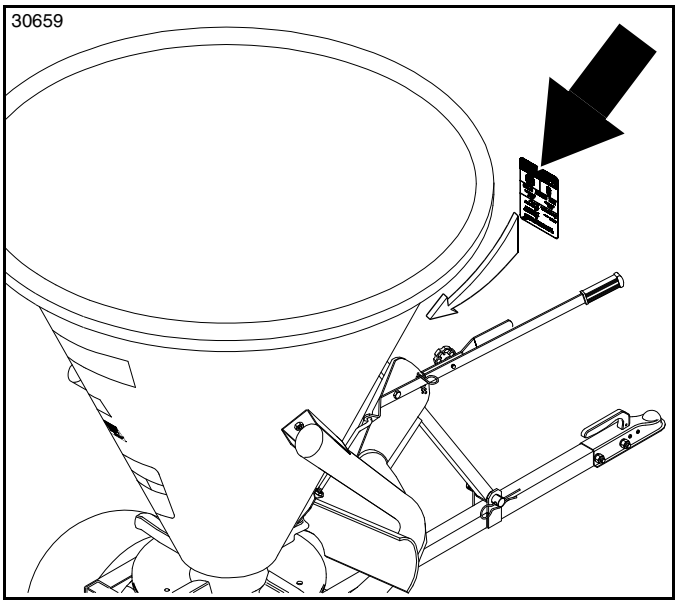

818-541C
Danger: Toxic Chemical Hazard
1 Place: On the front of the hopper

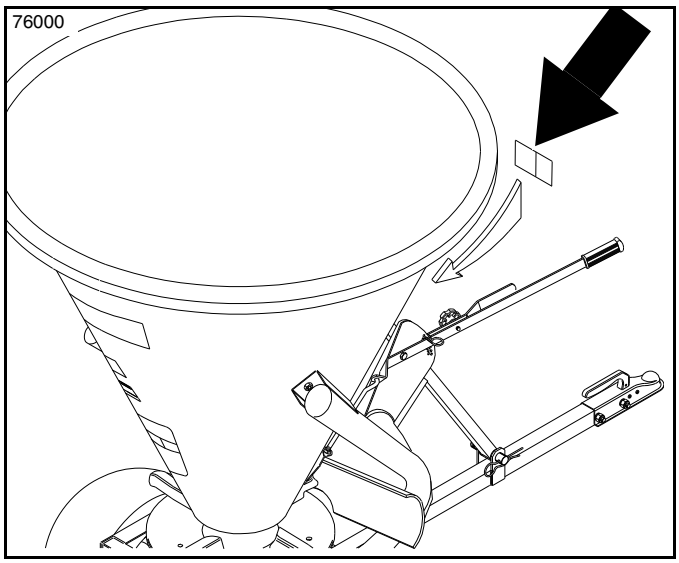

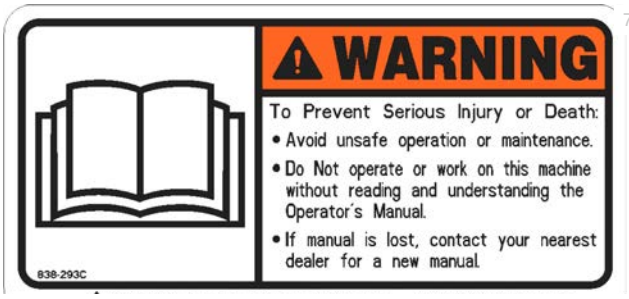

838-293C

Warning: Read Operator's Manual - General Warning

1 Place: On the front of the hopper

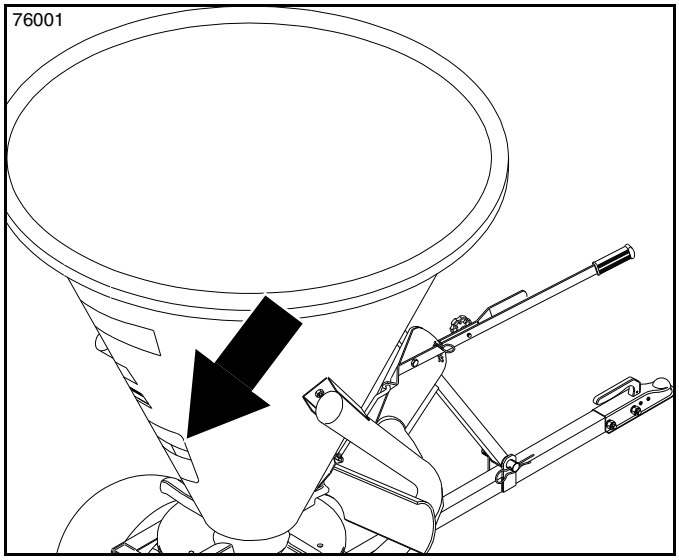

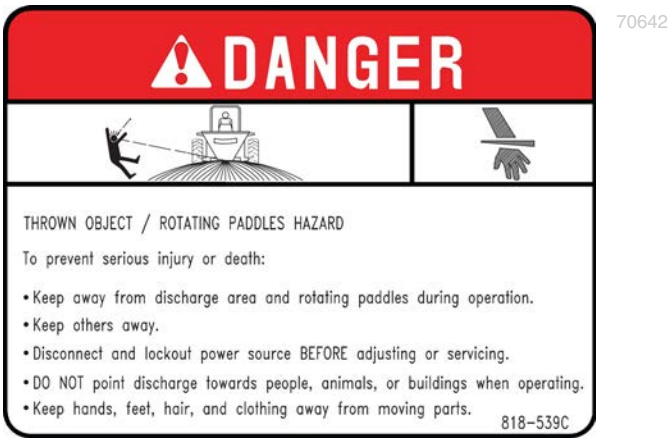

818-539C

Danger: Thrown Object / Rotating Paddles Hazard

1 Place: On the back of the hopper

Land Pride welcomes you to the growing family of new product owners. This Broadcast Seeder has been designed with care and built by skilled workers using quality materials. Proper assembly, maintenance, and safe operating practices will help you get years of satisfactory use from this implement.

Application

The Land Pride PTS500 and PTS700 are spin type broadcast spreaders designed with a pull type hitch. They are ground wheel driven with simple gearbox disengagement for transport. The spreaders are capable of spreading seed, salt, top dressings, prilled/granular fertilizer, and many other types of granular materials. Each of these models offer Poly Hoppers with the following capacities:

PTS500 . . . . . 350 lbs/5.83 ft^3 (159 kgs/0.17 m^3)
PTS700 . . . . . 563 lbs/9.18 ft^3 (255 kgs/0.26 m^3)

The spread rate capability and range of hopper capacities make the Land Pride Broadcast Spreaders well suited for applications on farms, golf courses, food-plots, park systems, athletic fields, and large campuses. They also work well for smaller municipal or commercial applications of salt and sand for snow and ice control.

See **"Specifications & Capacities"** on page 27 and **"Features & Benefits"** on page 28 for additional information and performance enhancing options.

Using This Manual

- This Operator's Manual is designed to help familiarize you with safety, assembly, operation, adjustments, troubleshooting, and maintenance. Read this manual and follow the recommendations to help ensure safe and efficient operation.
- The information contained within this manual was current at the time of printing. Some parts may change slightly to assure you of the best performance.
- To order a new Operator's or Parts Manual, contact your authorized dealer. Manuals can also be downloaded, free-of-charge, from our website at www.landpride.com

Terminology

"Right" or "Left" as used in this manual is determined by the direction the operator faces while sitting in the operator's seat looking forward unless otherwise stated.

Owner Assistance

The dealer should complete the Online Warranty Registration at the time of purchase. This information is necessary to provide you with quality customer service.

The parts on your Broadcast Spreader have been specially designed by Land Pride and should only be replaced with genuine Land Pride parts. Contact a Land Pride dealer if customer service or repair parts are required. Your Land Pride dealer has trained personnel, repair parts, and equipment needed to service the implement.

Serial Number

For quick reference and prompt service, record model and serial number on the inside cover page and again on the warranty page. Always provide model number and serial number when ordering parts and in all correspondences with your Land Pride dealer. For location of your serial number plate, see Figure 1.

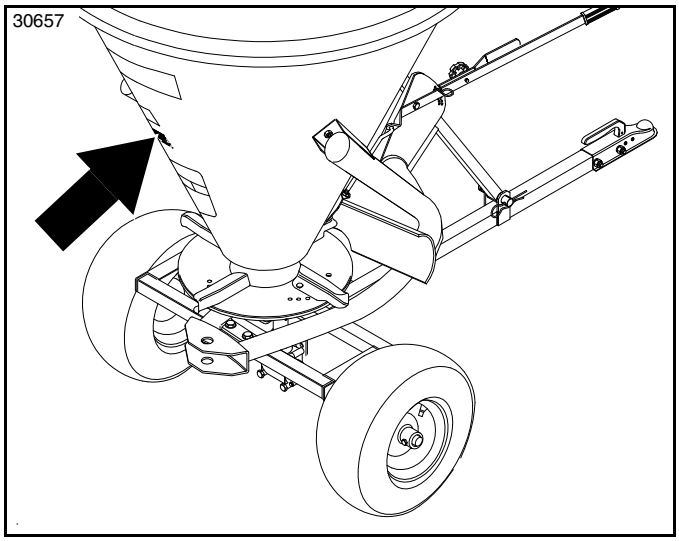

Serial Number Plate Location
Figure 1

Further Assistance

Your dealer wants you to be satisfied with your new Broadcast Spreader. If for any reason you do not understand any part of this manual or are not satisfied with the service received, the following actions are suggested:

1. Discuss any problems you have with your implement with your dealership service personnel so they can address the problem.
2. If you are still not satisfied, seek out the owner or general manager of the dealership, explain the question/problem, and request assistance.
3. For further assistance write to:

Land Pride Service Department
1525 East North Street
P.O. Box 5060
Salina, Ks. 67402-5060

E-mail address
lpservicedept@landpride.com

The PTS Series Broadcast Spreader will need to be assembled before it can be attached to the customer's tractor. Read and understand this Operator's Manual before assembling the spreader. An understanding of how the unit works will aid in the assembly and setup.

Hitch Requirements

The PTS series spreaders are pull-type models with a 2" ball receiver hitch.

Torque Requirements

Refer to **"Torque Values Chart for Common Bolt Sizes"** on page 30 to determine correct torque values when tightening hardware.

Grease Zerks

Refer to Figure 1-1:

1. Make a mark of your choosing on the right-hand end plate to help during assembly and set-up.
2. After marking the right-hand end plate, turn base frame (#2) upside down and place on a work table to make assembly and set-up easier.
3. Screw grease zerks (#1) into axle support tubes until tight.

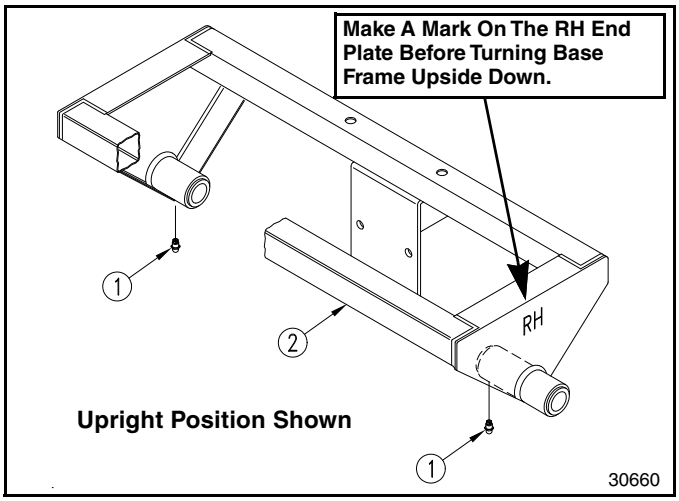

Grease Zerk Installation
Figure 1-1

Axles & Gearbox

Refer to Figure 1-2:

1. For easier installation, keep base frame turned upside down on a work table.
2. Loosen set screw (#11) and remove agitator drive shaft (#12). Keep drive shaft for reassembly later. Be careful not to lose key (#13) and set screw (#11).
3. Verify set screw (#10) is tight.

NOTE: Grease zerks (#3) may be screwed in too far and interfere with installation of axles (#2 & #4) to gearbox input shafts. Unscrew grease zerks slightly if they interfere with installation.

4. Slide flat washer (#1) onto drive axle (#2) and insert axle into axle hub "A" on the right-hand end plate. Push axle all the way in before continuing.
5. Insert floating axle (#4) into axle hub "B" on the left-hand end plate.
6. Position gearbox (#5) with grease decal visible from the back and output shaft pointing towards the rectangular tubing frame. Insert left-hand input shaft into end of floating axle (#4).
7. Attach drive axle (#2) to gearbox (#5) with wire retaining pin (#6). Make sure wire retainer is caught over end of pin to keep pin from falling out.

IMPORTANT: ***DO NOT FORCE ALIGNMENT OF GEARBOX.*** Holes in plate "C" should line up with gearbox holes without forcing gearbox into position. If they do not align, Ream holes in plate "C" until it takes no pressure for alignment.

8. Attach gearbox to mounting plate "C" with four M10 x 100 cap screws (#8) and hex locknuts (#9). Tighten locknuts to the correct torque.
9. Slide washer (#1) against hub "A" and install 5 mm x 40 mm roll pin (#7).

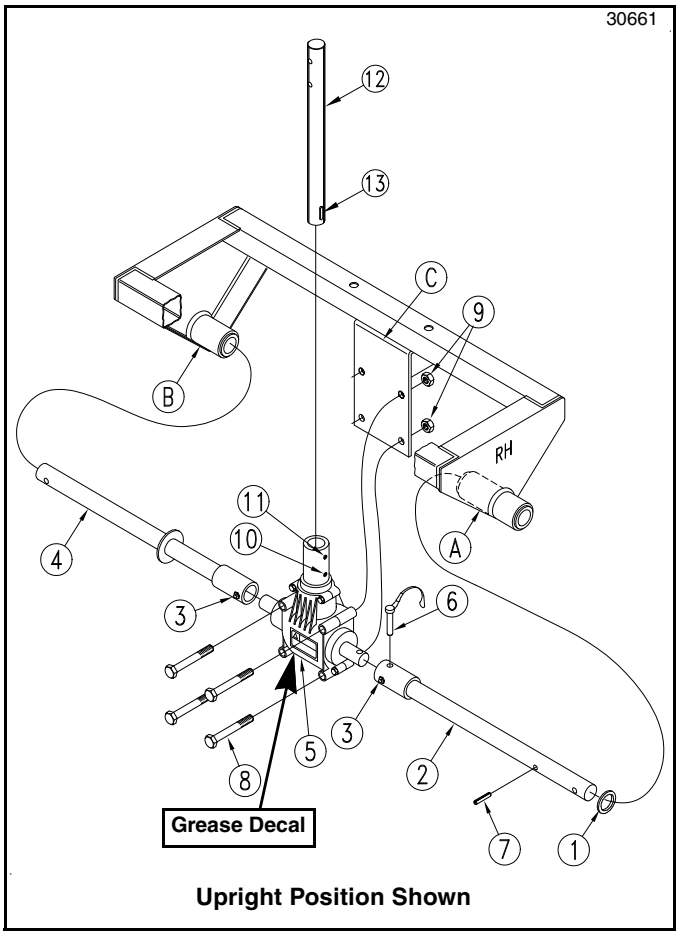

Axle & Gearbox Installation
Figure 1-2

Hopper Frame

Refer to Figure 1-3:

1. Turn hopper support frame (#2) upside down on the floor. Set center 3-Point clevis on support blocks to stabilize hopper support frame.
2. Install 10 x 20 O.D. flat washers (#4) onto M10 x 70 cap screws (#3).
3. Attach bracket (#7) and hopper support frame (#2) to base frame (#1) with cap screws (#3) and flat washers (#4). Secure cap screws with 10 x 30 O.D. flat washers (#5) and locknuts (#6).
4. Do not tighten locknuts (#6) until step 4 under **"Poly Hopper"** on page 11.

Tongue

Refer to Figure 1-4:

1. Attach ball hitch (#2) to tongue (#1) with 3/8"-16 x 3" cap screws (#3), 3/8" USS flat washers (#4 & #5), and 3/8" nylock nuts (#6). Tighten nylock nuts to the correct torque.
2. Attach tongue (#1) to clevis (#7) with TE 22 x 80 cap screw (#8) and locknut (#9).
3. Draw locknut (#9) up until tongue has slight resistance to hinge movement. Do not torque tight.
4. Attach large tube end of telescopic arm (#10) to tongue (#1) with pivot pin (#11). Secure pivot pin with hairpin (#12).
5. Attach small tube end of telescopic arm (#10) to center 3-Point clevis (#13) with pivot pin (#14). Secure pivot pin with hairpin (#15).

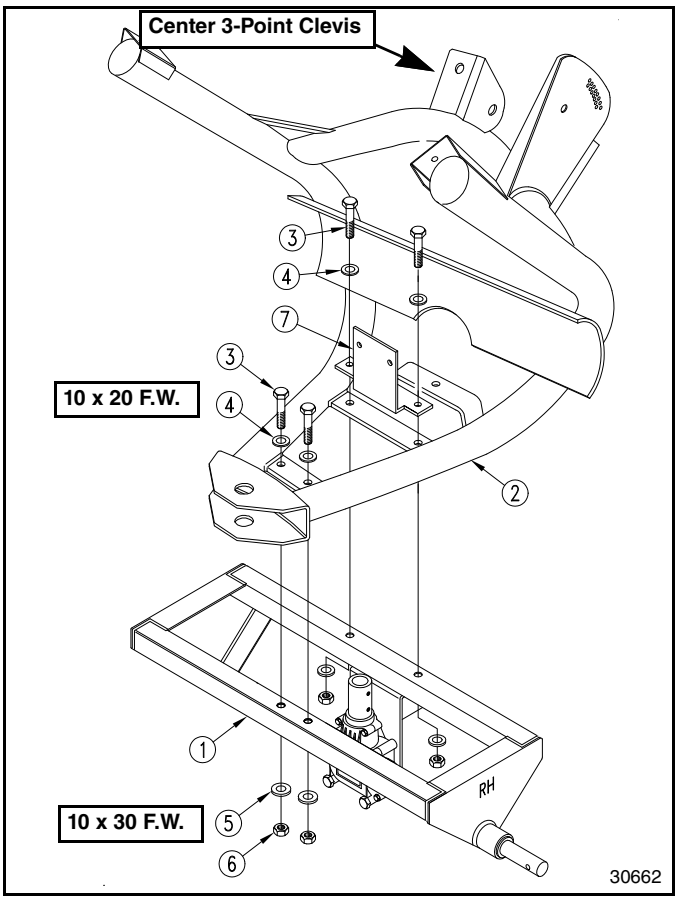

Hopper Frame Installation
Figure 1-3

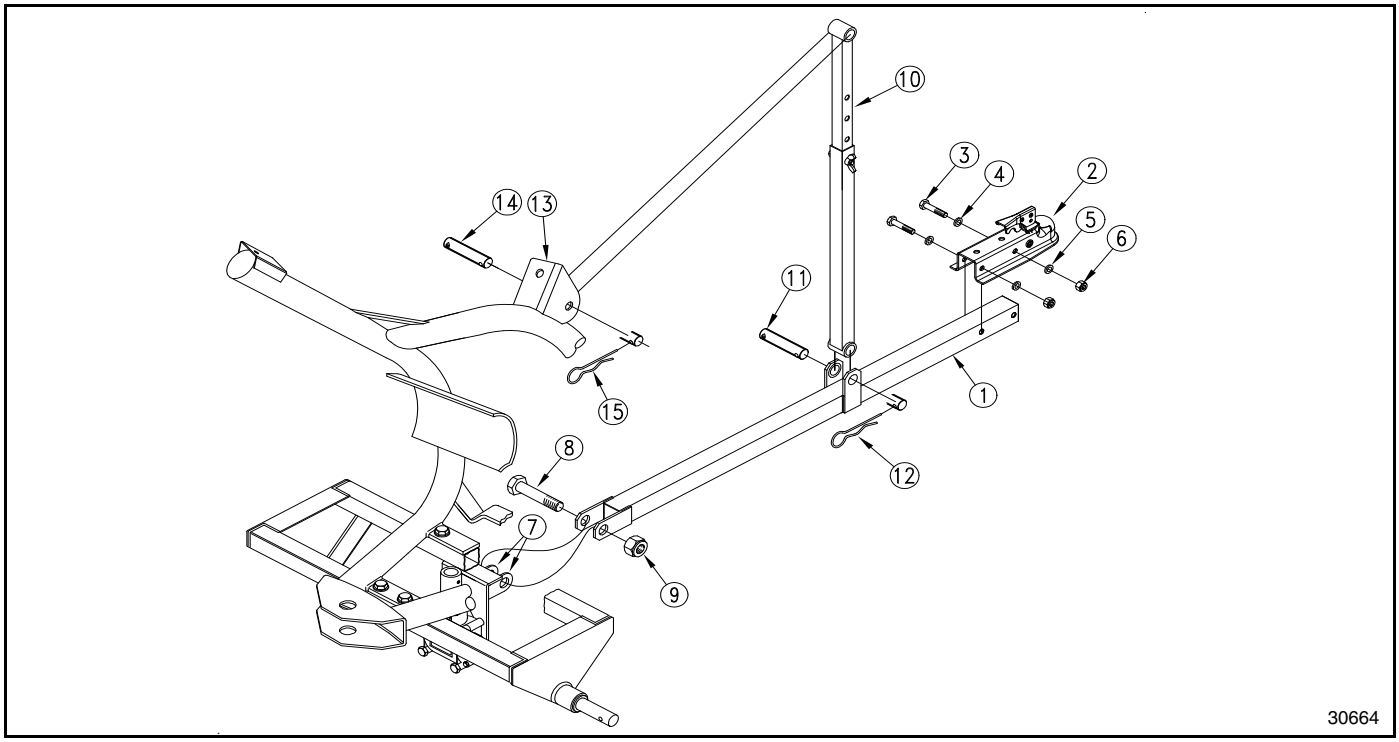

Tongue Installation
Figure 1-4

Wheels & Drive Shaft Bearing

Refer to Figure 1-5:

1. Attach wheels (#1) to right and left-hand axles (#2) with TE 8 x 50 cap screw (#3) & locking nut (#4). Tighten nuts to the correct torque.
2. With locking collar facing up, attach bearing (#8) to bracket (#5) with M10 x 30 bolts, flat washers (#7), and hex nuts (#9) in as shown. Draw hex nuts (#9) up snug, do not tighten at this time.

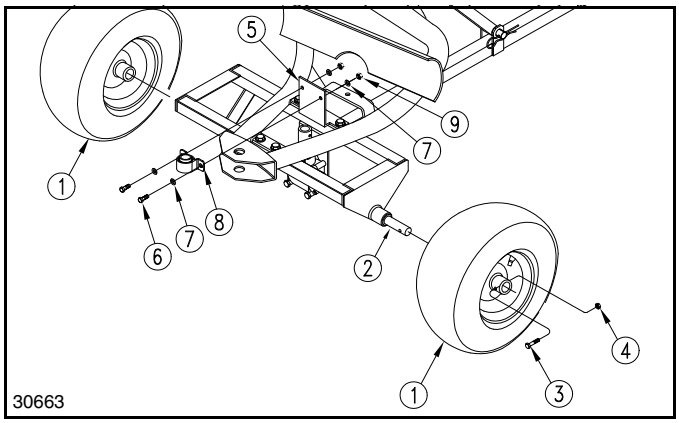

Wheel & Drive Shaft Bearing Installation
Figure 1-5

Spreader Disc

Refer to Figure 1-6:

> **IMPORTANT:** Install drive shaft (#1) to spreader disc (#2) before installing drive shaft to gearbox.

1. Insert spreader disc drive shaft (#1) into hub of end of spreader disc (#2) until second hole from end of drive shaft aligns with hole in hub.
2. Drive M8 x 14 spring pin (#3) through spreader disc hub and drive shaft.
3. Drive a second M5 x 40 spring pin (#4) fully inside the first spring pin (#3).

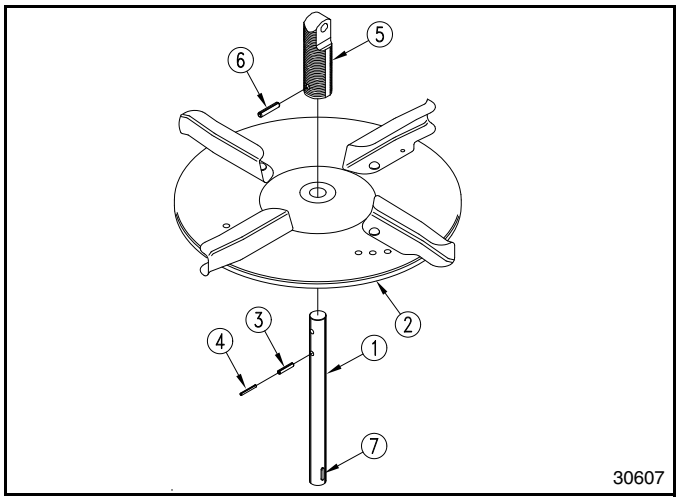

Spreader Disc Assembly
Figure 1-6

4. Attach entrainer (#5) to spreader drive shaft (#1) with M8 x 14 spring pin (#6). Be sure to drive spring pin all the way in.
5. Make certain key (#7) is still in keyway of drive shaft.

Refer to Figure 1-7:

6. Turn assembled support frames upright for the remaining assembly instructions.
7. Insert spreader disc drive shaft (#1) through pillow block bearing (#11) and attach to gearbox output shaft (#8) with existing M6 set screw (#9).
8. Tighten set screws (#9 & #10) to the correct torque. Do not tighten bearing locking collar (#11) and bearing mounting bolts (#12) at this time.

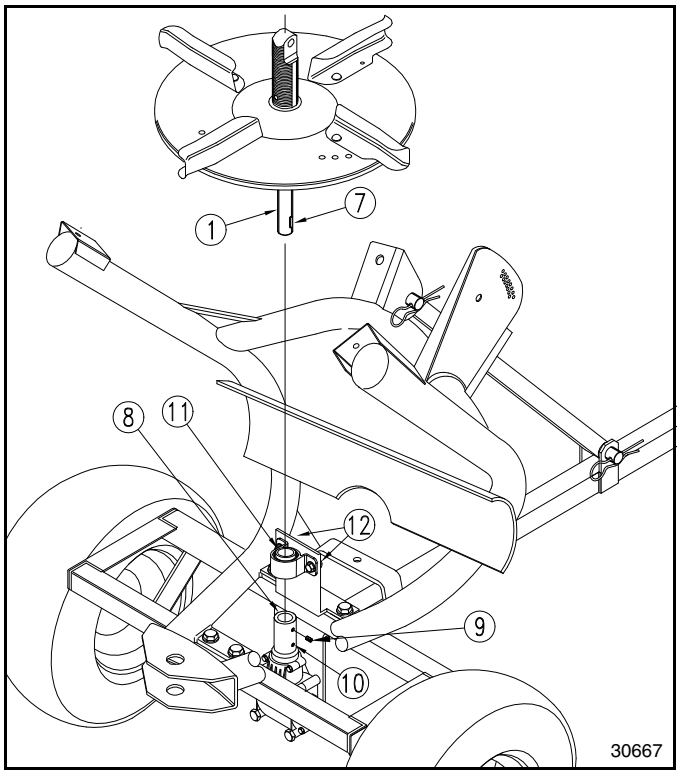

Spreader Disc Installation
Figure 1-7

Poly Hopper

Refer to Figure 1-8 on page 12:

1. Orient poly hopper with gate openings straddling both sides of lever mounting bracket. Land Pride decal is on back side of hopper.

> **NOTE:** Tap carriage bolts (#3 & #5) into poly hopper before installing nuts (#4 & #7).

2. Attach hopper (#1) to support frame tubes with M10 x 20 carriage bolts (#3) and M10 nuts (#6). Draw nuts up snug, do not tighten.
3. Attach hopper front to center 3-Point clevis with M10 x 20 carriage bolt (#5), M10 x 30 flat washer (#6) and nut (#7). Draw nut up snug, do not tighten.

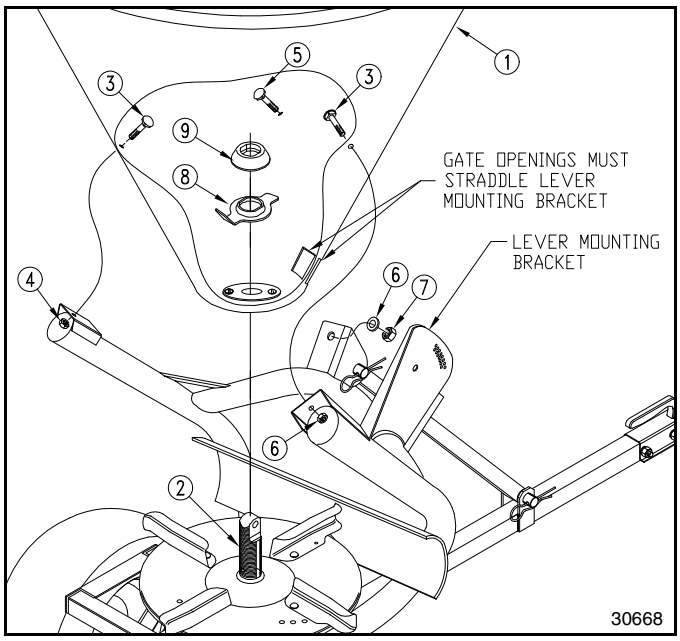

Poly Hopper Installation
Figure 1-8

Refer to Figure 1-3 on page 10:

4. Adjust base frame (#1) and bracket (#7) under hopper to center entrainer in hopper and then tighten nuts (#6) to the correct torque.

Refer to Figure 1-7 on page 11:

5. Tighten bearing mounting bolts (#12) to the correct torque. Tighten set screw in locking collar (#11).

Refer to Figure 1-8:

6. Tilt front of hopper (#1) up or down to center hopper over entrainer (#2) as much as possible and tighten nut (#7) to the correct torque.
7. Tighten nuts (#4) to the correct torque.
8. Insert agitator (#8) over entrainer (#2) and rubber ring (#9) over entrainer and press down until agitator is held against hopper bottom.

Gate Lift

Refer to Figure 1-9:

NOTE: “Right-hand” & “Left-hand” for the gate lift assembly only is determined by facing the front of the spreader.

NOTE: Gates (#4 & #5) and lift rods (#7 & #8) are factory assembled to levers (#13 & #14).

1. Insert left-hand gate (#4) into gate opening guide located at the bottom of the poly hopper.
2. Insert right-hand gate (#5) into gate opening guide located at the bottom of the poly hopper.
3. Attach adjustment lever (#13 & #14) to mounting bracket hole (A) with M12 x 35 hex head cap screw (#10) and M12 hex locknut (#11). Draw locknut up snug. Do not tighten nut.
4. Install adjustment lever locking knob (#12) as shown. Do not tighten knob.
5. Adjust levers (#13 & #15) fully up and insert hairpin (#2) in the top hole under the levers.
6. With levers resting against hairpin, tighten adjustment lever locking knob (#12) to ensure levers will not move.
7. Unscrew nuts (#1 & #3) to allow gates (#4 & #5) to fully close.
8. Hand tighten nuts (#6) down until touching gates and then hand tighten nuts (#3) up until touching gates.
9. Tighten nuts (#3) and nuts (#6) against each other an equal amount to hold gates fully closed.
10. Tighten jam nuts (#1) against gate nuts (#3).
11. Pull hairpin (#2) out and loosen locking knob (#12). Test gates to be sure they are fully closing and do not bottom out before levers are raised to fully closed position.

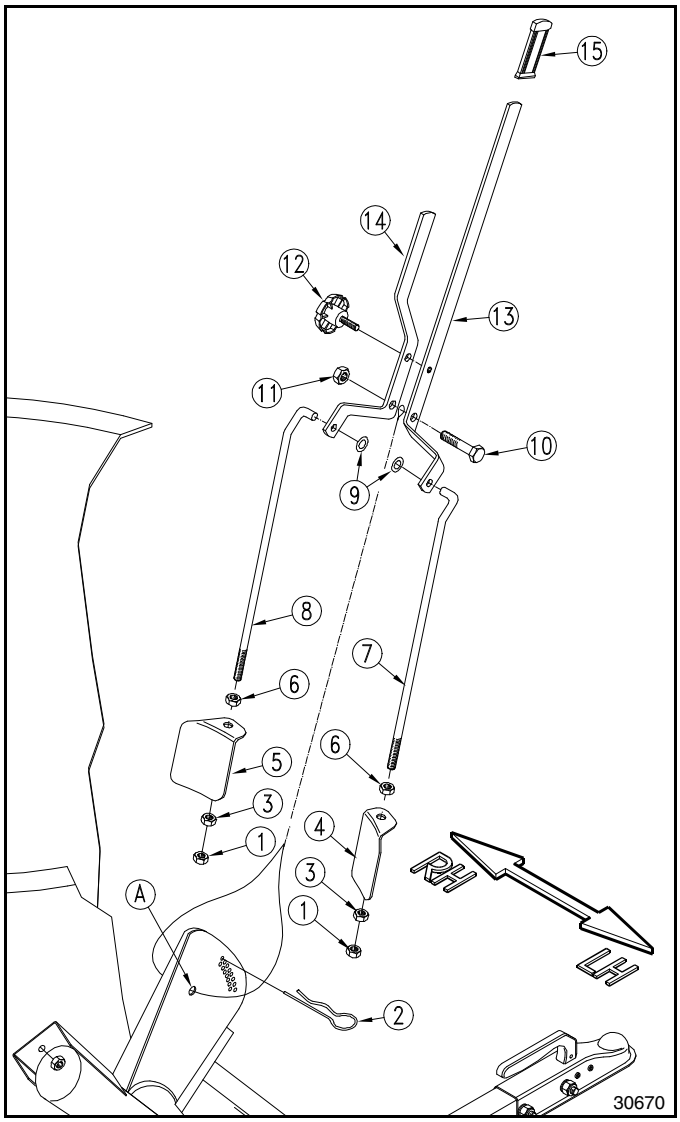

Gate Lift Installation
Figure 1-9

Ball Hitch Hook-up

DANGER

To avoid serious injury or death:

Hook-up to equipment is dangerous and can result in serious injury or death. ***Do not*** *allow anyone to stand between the power machine and spreader while backing-up to the unit.*

WARNING

To avoid serious injury or death:

- *Ballast weights may be required to maintain steering control. Refer to your tractor's operator's manual to determine proper ballast requirements.*
- *Engage parking brake, shut off tractor and remove ignition key before dismounting from tractor.*
- *Do not fill hopper until hitch is secured to a machine such as a tractor or vehicle. Hitch can become too difficult to raise and lower to connect to a machine causing bodily injury or death.*
- *The Broadcast Spreader can have negative tongue weight if hopper is tilted back pass center of gravity or if hitch is raised too high tilting hopper pass center of gravity.*
- *Chock front and back of wheels before unhitching to prevent spreader from rolling and causing property damage and/or bodily injury.*
- *Release handle on the ball hitch must be fully down, locked in the down position with a retaining pin, and retaining pin secured with pin retainer to prevent hitch from coming unhooked.*

CAUTION

To avoid minor or moderate injury:

Keep hands, fingers, and other bodily extremities out from under the hitch handle and ball socket while lowering hitch over the ball.

Refer to Figure 1-10:

1. Attach customer supplied 2" ball (#2) to drawbar of machine pulling the Broadcast Spreader. Tighten nut (#1) supplied with ball to the correct torque. A 2" ball with 3/4" shank (P/N 890-975C) can be purchased from your nearest Land Pride dealer.
2. Back machine to the Broadcast Spreader until 2" ball (#2) is in alignment with ball socket in hitch (#3).

NOTE: 1/4" Wire retaining pin or bolt and nut (#4) to be customer supplied.

3. If supplied by customer, remove retaining pin/bolt (#4) and pull up on release handle (#5).
4. With release handle up, lower ball hitch over 2" ball.
5. Make sure ball hitch is fully on the 2" ball and then push release handle (#5) down until locked.
6. Insert customer supplied retaining pin/bolt (#4) and secure in place with customer supplied pin retainer. 1/4" Wire retaining pin (P/N 805-065C) may be purchased from your nearest Land Pride dealer.

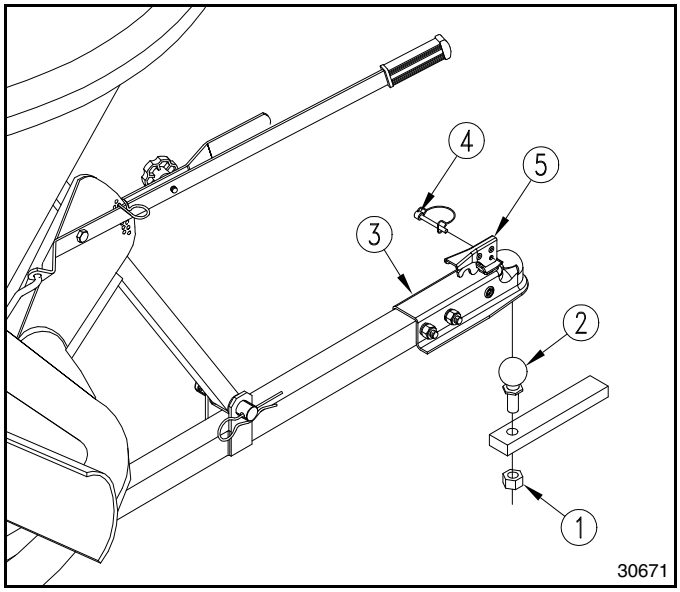

Ball Hook-Up
Figure 1-10

This page left blank intentionally

Operating Checklist

Hazard control and accident prevention are dependent upon the awareness, concern, prudence, and proper training involved in the operation, transportation, storage, and maintenance of the spreader. Therefore, it is absolutely essential that no one operates the spreader unless they have read, fully understood, and are totally familiar with the Operator's Manual. Make sure the operator has paid particular attention to:

- **Important Safety Information**, pages 1 to 6
- **Section 1: Assembly & Set-up,** page 9
- **Section 2: Operation**, page 15
- **Section 3: Adjustments:**, page 18
- **Section 5: Maintenance & Lubrication:**, page 25

The following checks should be made before filling the the spreader with product.

Operating Checklist

✔	Check	Ref.
	Lubricate spreader as needed. Refer to "Lubrication Points" instructions.	Page 26
	Make sure spreader disc is parallel to ground. Refer to "Telescopic Arm Adjustment"	Page 18
	Pull spreader empty several feet to make sure spreader disc and wheels are rotating.	Page 16
	Check distributor vanes and spreader disc. Refer to "Initial Adjustments and Checks".	Page 16
	Make sure discharge gates opens and closes. Refer to "Initial Adjustments and Checks".	Page 16
	Check spreader initially and periodically for loose hardware. See "Torque Values Chart".	Page 30

Safety Information

DANGER

To avoid serious injury or death:

- *Do not allow anyone near the tractor or implement while they are operating. Stop operation if bystanders are too close. They can be hit by flying projectiles, become entangled in the equipment, or ran over.*
- *Do not allow anyone to climb inside the hopper for any reason. Serious injury or death can result from someone becoming entangled in the hopper.*

WARNING

To avoid serious injury or death:

- *Allow only persons to operate this implement who have fully read and comprehended this manual, and who are properly trained in the safe operation of this implement.*
- *Do not allow the power machine to run unattended and never hook-up the spreader with the engine running. Always place transmission in park or engage park brake, shut off engine, and remove ignition key before hooking-up the spreader and/or dismounting from the power machine.*
- *Do not allow any person or animal inside the danger zone while vanes are slinging product (within a radius of 50 yards from the spreader). Stop application immediately should anyone come inside the danger zone. Product thrown from the spreader can cause bodily injury or death.*
- *Do not operate and/or travel across inclines where the tractor and/or implement can rollover. Consult your tractor's manual for acceptable inclines the tractor is capable of traveling across.*
- *Lightweight power machines with rear attached implements may need weights added to the front to maintain steering control. Consult your power machine Operator's Manual to determine proper weight requirements and maximum weight limitations on the hitch.*
- *Always wear non slip shoes, gloves, protective clothing, safety glasses, and a breathing mask capable of filtering powders when cleaning, servicing, lubricating, and filling your Broadcast Spreader to prevent injury to the body and/or injury from inhalation of product. Refer to chemical manufacturers' labels for specific protective requirements.*
- *Use a cab tractor with filters on the ventilation system or wear a breathing mask capable of filtering powders to prevent inhalation of product.*
- *Always park the Broadcast Spreader on a hard level surface and always empty hopper of product before disconnecting spreader from tractor/vehicle.*
- *The Broadcast Spreader can have negative tongue weight if hopper is tilted back pass center of gravity or if hitch is raised too high tilting hopper pass center of gravity.*
- *Never carry riders on the implement or tractor. Riders can obstruct the operator's view, interfere with controls, be pinched by moving components, become entangled in rotating components, struck by objects, thrown about, fall off and be run over, etc.*
- *Clear area of debris and other unforeseen removal objects before spreading product. Mark any potential hazards that cannot be removed such as tree stumps, post, rocks, holes, and drop-offs with a visible flag.*
- *Do not use spreader to carry objects. Doing so can damage the spreader, cause serious bodily injury or result in death.*

CAUTION

To avoid minor or moderate injury:

Keep Broadcast Spreader clean of rocks, tools, and other debris that can damage the operation of the machine or be thrown causing bodily injury.

Transporting

WARNING

To avoid serious injury or death:

This spreader is NOT designed to be pulled on public roads. A safety chain must be used when traveling on public roads. Day or night, use accessory lights and other devices for adequate warning to operators of other vehicles. It is mandatory to comply with all federal, state, and local laws.

CAUTION

To avoid minor or moderate injury:

- *Empty hopper before transporting from site to site especially when transporting on public roads.*
- *Never transport your Broadcast Spreader at speeds in excess of 20 miles per hour.*

IMPORTANT: Do not travel long distances with product in hopper or carry bags stacked on top of product in hopper. Doing so will cause product to compress resulting in improper discharge.

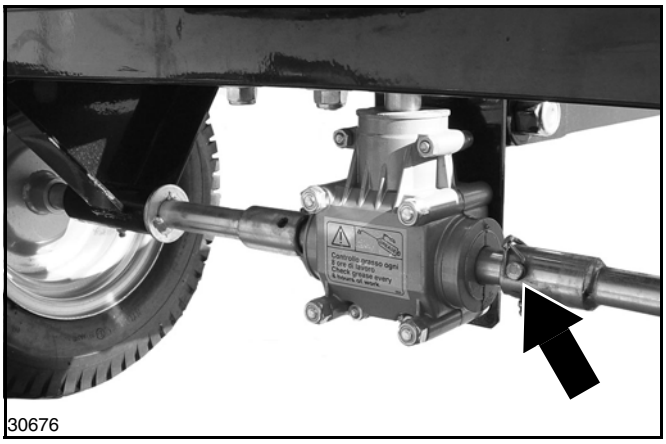

Wire Retaining Pin Location
Figure 2-1

Refer to Figure 2-1:

1. Make sure wire retaining pin is removed before transporting from one location to another. Replace wire retaining pin only to spread product. Make sure wire retainer is caught over end of pin to keep pin from falling out.
2. Be sure to reduce tractor ground speed when turning; and leave enough clearance so that the spreader does not contact obstacles such as buildings, trees, or fences.
3. Select a safe ground speed when transporting from one area to another. When traveling on roadways, transport in such a way that faster moving vehicles may pass you safely.
4. When traveling over rough or hilly terrain, shift tractor to a lower gear.
5. The Broadcast Spreader is equipped with a towing hitch. Maximum towing capacity is 800 pounds with maximum tongue weight of 50 pounds.

Initial Adjustments and Checks

WARNING

To avoid serious injury or death:

- *Before loading the hopper with product, the spreader must be properly hitched to a tractor/vehicle capable of handling a fully loaded hopper and the telescopic arm must be adjusted to the proper length.*
- *Always read and comply with all instructions and precautions on the label of the product being used.*
- *Always wear non slip shoes, gloves, protective clothing, safety glasses, and a breathing mask capable of filtering powders when cleaning, servicing, lubricating, and filling your Broadcast Spreader to prevent injury to the body and/or injury from inhalation of product. Refer to chemical manufacturers' labels for specific protective requirements.*

NOTE: To spread product more uniformly and correctly, operate spreader only on calm (non windy) days with dry product (not humid) that does not have lumps.

1. Pull spreader empty several feet to make sure spreader disc and wheels are rotating.
2. Stop spreader on a hard level surface, engage park brake, shut engine off, and remove ignition key before dismounting from tractor.
3. Make certain spreader disc is parallel to the ground. See Telescopic Arm Adjustment on page 18.
4. Check distributor vanes and spreader disc for cleanliness and wear. Clean spreader disc and vanes if needed. Replace worn spreader disc and distributor vanes with genuine Land Pride parts only.
5. Make sure discharge gates open and close properly.
6. Close discharge gates, tighten lever locking knob, and insert hairpin in the first hole just below the lift levers to ensure gates do not work open.

Calibrate Hopper Discharge Rate

1. Fill hopper with precise amount of material to cover one acre. Make a test run dispersing the material over one acre at the speed you intend to apply the product to verify if any gate adjustments are needed.
2. Make gate adjustments per instructions under **"Dispersal Pattern"** on page 18.
3. Adjust distributor vanes per instructions outlined under **"Distributor Vane Adjustment"** on page 19.
4. Make a measurement of the spread pattern to be used later when applying product to the field.
5. Once all adjustments and calibrations above have been made and settings are satisfactory, continue with **"Field Application"** instructions on page 17.

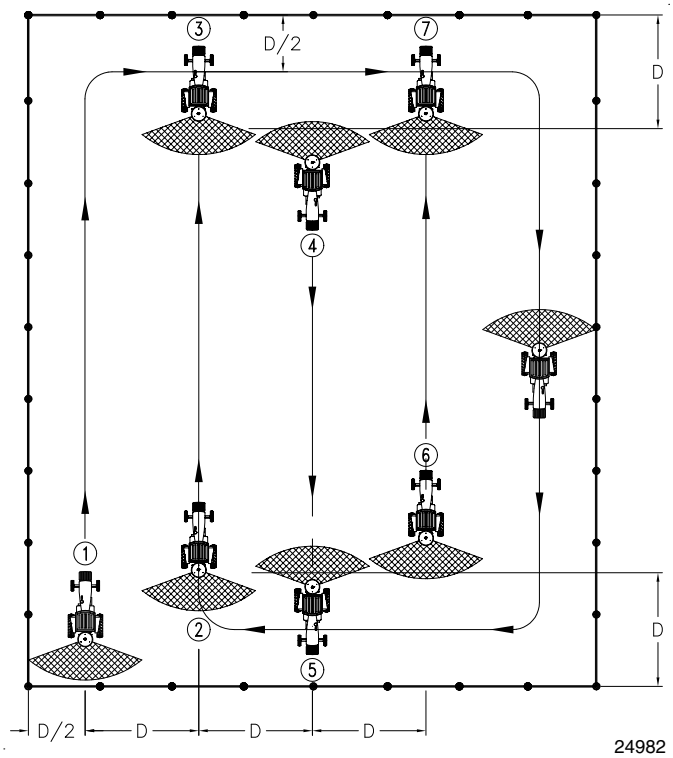

Field Application Pattern
Figure 2-2

Field Application

Refer to Figure 2-2:

> **NOTE:** To ensure full coverage (without skips), set spreader to disperse product at half the rate and go over the field plot twice using a 2nd pattern that crosses the first pattern.

1. Fill hopper only after arriving at the application site.

> D = spread pattern
> D/2 = one-half the spread pattern

2. Start tractor (1) in a field corner at a distance equal to (D/2) away from the field edge.
3. Maintain this half distance from the field edge as you travel around the complete perimeter of the field.
4. When approaching starting point (2), turn tractor when at distance (D) away from the first run and travel parallel to the first run until the tractor (#3) is at distance (D) away from end of field.
5. Once you reach distance (D) from end of field, close distribution gates, turn tractor, and drive forward until at distance (D) away from the last run and then turn the tractor (4) again to head back across the field.
6. Open distribution gates and continue back parallel to the previous run until tractor (5) is again at distance (D) away from end of field.
7. Continue this back and forth pattern (2-3, 4-5, 6-7, etc.) until field plot has been covered.

General Operating Instructions

By now you should have properly hitched your Land Pride Broadcast Spreader to your tractor/vehicle. Based on the type of material and pounds per acre you intend to broadcast, you should have referred to the spreading chart in the Operator's Manual to determine the proper tractor ground speed, distribution gate opening, and spread pattern setting for your spreader. This process of taking prescribed fertilizer or seed label rates and making the necessary spreader setting adjustments is called "initial calibration".

When setting your spreader up for initial calibration, following the chemical or seed supplier's label directions and using the manufacturer's application rate setting charts is highly encouraged. Once you have achieved your initial calibration, it is time to make "final calibration" adjustments.

Travel to the area with tractor and hopper where chemicals or seed are to be applied. Measure off a test area. An acre is preferred. Measure out exactly enough product to cover an acre at the manufacturer's prescribed rate and put it in the hopper. You should have already determined the appropriate ground speed that will allow you to meet the application rate. Start tractor and open distribution gate just as you move onto the plot traveling at proper ground and engine speed. Look back often to observe your distribution width and pattern density. Typically the pattern won't be as dense on the outer edges. As you make your turn for an adjacent pass, adjust your travel path to achieve uniform overlap and pattern density. You may need to close and open the distribution gate at the beginning and ending of each pass. Your hopper should empty out just as you complete coverage of your one-acre plot. If not, make the necessary adjustments until you are absolutely confident that you have achieved the proper final calibration.

Once you have achieved final calibration, load the spreader hopper with the appropriate amount of material to be spread. Do not overload hopper with more weight than is specified for your individual model. If the tractor front end becomes too light for proper steering, add tractor weights to the front end. Proceed with spreading operations looking back often to ensure a uniform distribution pattern and to make sure there are no interruptions to hopper flow.

With a little practice you should become a very good applicator. Once you are done spreading, park the tractor/vehicle, set the brake, shut off the tractor/vehicle, and remove the keys. When finished, always clean out the spreader to prevent rust and corrosion.

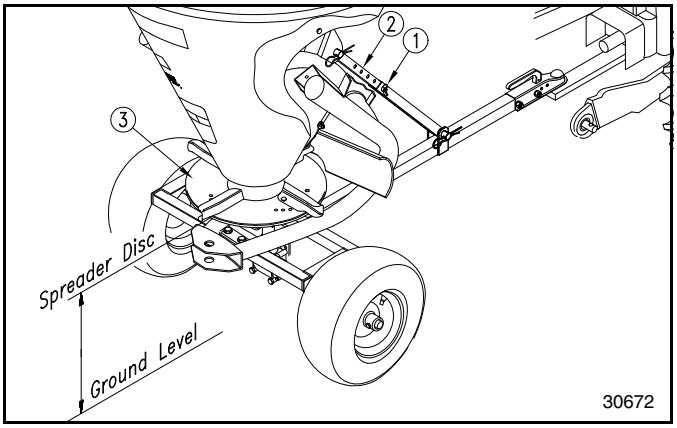

Telescopic Arm Adjustment
Figure 3-1

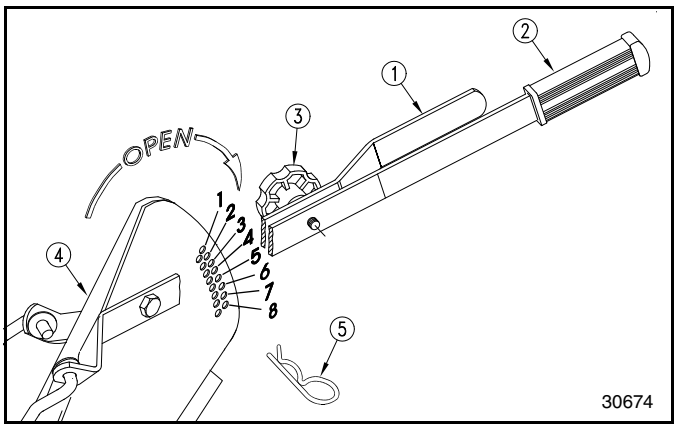

Gate Setting Hole Numbers
Figure 3-2

Telescopic Arm Adjustment

Refer to Figure 3-1:

⚠ WARNING

To avoid serious injury or death:

Before loading the hopper with product, the spreader must be properly hitched to a tractor/vehicle capable of handling a fully loaded hopper and the telescopic arm must be adjusted to the proper length.

Before adjusting the telescopic arm, make certain the spreader is hitched to the machine that will pull the unit. Once hitched, the telescopic arm must be adjusted until the spreader disc is as parallel as possible to the ground to get a uniform and regular distribution of product.

1. Hitch spreader to the machine that will be pulling the unit. Park spreader & machine on a flat level surface.
2. Remove wing nut & bolt (#1) from telescopic arm (#2). Shorten or lengthen telescopic arm until spreader disc (#3) is parallel with the ground.
3. Reinstall bolt and wing nut (#1) and hand tighten.

Dispersal Pattern

Refer to Figure 3-2:

Product dispersal is controlled by properly opening and closing left-hand and right-hand gates at the hopper bottom with adjustment levers (#1 & #2).

Some adjustment to the distributor vanes may be required. See detailed instructions for **"Distributor Vane Adjustment"** on page 19.

Positioning right and left gate levers as follows:

Right Side Dispersal, View (A) in Figure 3-3

Refer to Figure 3-2:

1. Remove lever locking knob (#3).
2. Close left-hand gate by moving adjustment lever (#2) up above gate setting position #1.
3. Move adjustment lever (#1) to the selected gate setting provided in spreading charts on pages 20-23.
4. Secure adjustment lever (#1) by placing hairpin (#5) in the selected gate setting hole with adjustment lever (#1) resting on top of hairpin (#5).

Full Width Dispersal, View (B) in Figure 3-3

Refer to Figure 3-2:

1. Lock adjustment levers (#1 & #2) together with lever locking knob (#3).
2. Move adjustment levers together to the selected gate setting provided in spreading charts on pages 20-23.
3. Secure adjustment levers by placing hairpin cotter (#5) in the selected gate setting hole with adjustment levers resting on top of hairpin (#5).

Left Side Dispersal, View (C) in Figure 3-3

Refer to Figure 3-2:

1. Remove lever locking knob (#3).
2. Close right-hand gate by moving adjustment lever (#1) above gate setting position #1.
3. Move adjustment lever (#2) to the selected gate setting provided in spreading charts on pages 20-23.
4. Secure adjustment lever (#2) by placing hairpin (#5) in the selected gate setting hole with adjustment lever (#2) resting on top of hairpin (#5).

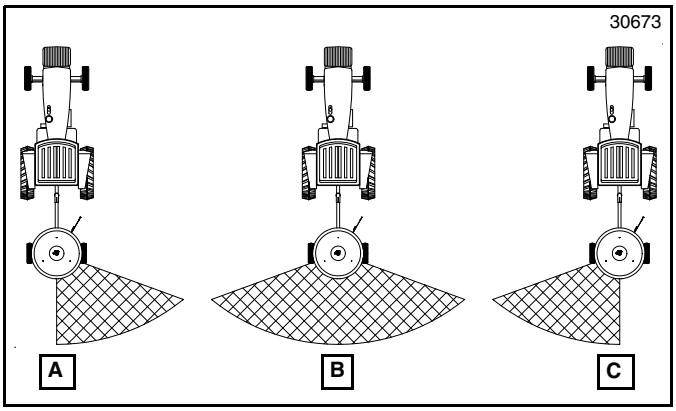

Dispersal Pattern
Figure 3-3

Distributor Vane Adjustment

Product distribution varies depending on travel speed, radius of distribution, wind, and roughness of terrain. Specific gravity, quality, and humidity of the product can also effect distribution. To help ensure even distribution, the operator can adjust the distributor vanes to different hole locations on the spreader disc.

Refer to Figure 3-4:

When all vanes are placed in hole #1, distribution of product to the left is increased. If inserted into hole #4, distribution to the right is increases.

Moving vanes from position #1 towards position #4 and keeping the same traveling speed will increase the distribution width of the product. Final adjustment of the vanes depends upon the type of material being used and the operator's experience.

1. Loosen M8 x 16 round head bolt (#1).
2. Rotate distributor vanes (#2) to desired hole position.
3. Re-tighten M8 bolts (#1).

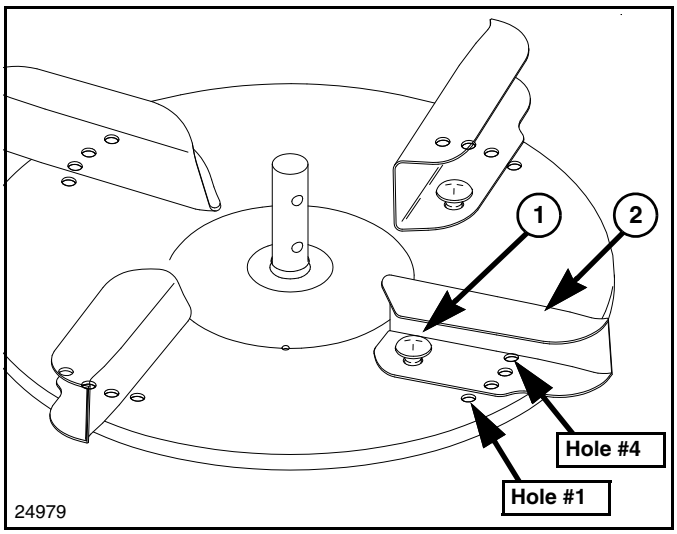

Distributor Vane Adjustment
Figure 3-4

English Spreading Chart for Fertilizer & Seed*

	TRACTOR SPEED (MPH)	QUANTITY SPREAD IN LBS./ACRE AT VARIOUS GATE SETTINGS								
		1	2	3	4	5	6	7	8	8.5
LARGE GRANULAR FERTILIZER	2.5		132	245	402	635	929	1014	1140	1248
	5		66	123	201	318	465	507	570	624
	7.5		44	82	134	212	310	338	380	416
MEDIUM GRANULAR FERTILIZER	2.5			311	448	709	925	1025	1118	1182
	5			156	224	355	463	513	559	591
	7.5		0	104	149	237	309	342	373	394
FINE GRANULAR FERTILIZER	2.5		112	189	322	529	747	842	963	1051
	5		56	95	166	265	374	421	482	526
	7.5		37	63	111	177	249	280	321	351
CRYSTAL (AMMON. SULPHATE)	2.5		226	368	560	890	1236	1354	1522	1632
	5		113	184	280	445	618	677	761	816
	7.5		75	123	187	297	412	451	507	544
THOMAS MEAL (BASIC SLAG)	4				571		1270		1685	
	8				286		635		843	
WHEAT	3						46	129	268	
	4						35	97	201	
	5						28	77	161	
	6						23	64	134	
	7						20	55	115	
	8						17	48	100	
ALALFA & CLOVER	3					43	163	340	645	
	4					33	122	255	484	
	5					26	98	204	387	
	6					22	82	170	323	
	7					19	70	146	277	
	8					16	61	127	242	
FESCUE & RYEGRASS	3							85	161	
	4							64	121	
	5							51	97	
	6							43	81	
	7							36	69	
	8							32	60	

***Note**: Due to the nature of this equipment that makes use of centrifugal principles, it is NOT possible to have an exact spreading chart for the following reasons: Varying product sizes, specific gravity, treatment of product, moisture content, inert material in product, number, and size of lumps in product, different mixtures of products and roughness of terrain.

English Spreading Chart for Fertilizer & Seed*

	TRACTOR SPEED (MPH)	POUNDS PER ACRE AT VARIOUS GATE SETTINGS								
		1	2	3	4	5	6	7	8	8.5
RED CLOVER	3					44	167	333	642	
	4					33	125	250	481	
	5					26	100	200	385	
	6					22	84	167	321	
	7					19	72	143	275	
	8					16	63	125	241	
KENTUCKY BLUE GRASS & BERMUDA GRASS	3					30	131	311	660	
	4					23	98	233	495	
	5					18	78	186	396	
	6					15	65	155	330	
	7					13	56	133	283	
	8					11	49	116	248	
SUDAN GRASS	3						49	131	271	
	4						37	98	203	
	5						29	79	163	
	6						24	66	136	
	7						21	56	116	
	8						18	49	102	
BARLEY	3						25	81	186	
	4						19	61	139	
	5						15	49	111	
	6						13	41	93	
	7						11	35	80	
	8						9	30	70	
RYE	3						25	81	186	
	4						19	61	139	
	5						15	49	111	
	6						13	41	93	
	7						11	35	80	
	8						9	30	70	

***Note**: Due to the nature of this equipment that makes use of centrifugal principles, it is NOT possible to have an exact spreading chart for the following reasons: Varying product sizes, specific gravity, treatment of product, moisture content, inert material in product, number, and size of lumps in product, different mixtures of products and roughness of terrain.

Metric Spreading Chart for Fertilizer & Seed*

	TRACTOR SPEED (km/h)	KILOGRAMS PER HECTARE AT VARIOUS GATE SETTINGS								
		1	2	3	4	5	6	7	8	8.5
LARGE GRANULAR FERTILIZER	4		149	276	453	716	1047	1143	1285	1407
	8		74	139	227	359	524	572	643	703
	12		50	92	151	239	349	381	428	469
MEDIUM GRANULAR FERTILIZER	4			351	505	799	1043	1156	1260	1333
	8			176	253	400	522	578	630	666
	12			117	168	267	348	386	421	444
FINE GRANULAR FERTILIZER	4		126	213	363	596	842	949	1086	1185
	8		63	107	187	299	422	475	543	593
	12		42	71	125	200	281	316	362	396
CRYSTAL (AMMON. SULPHATE)	4		255	415	631	1003	1393	1526	1716	1840
	8		127	207	316	502	697	763	858	920
	12		85	139	211	335	464	508	572	613
THOMAS MEAL (BASIC SLAG)	6.5				634		1410		1870	
	13				317		705		936	
WHEAT	4						62	175	363	
	6						42	117	242	
	8						32	87	182	
	10						25	69	145	
	11.5						22	60	126	
	13						19	53	111	
ALALFA & CLOVER	4					58	221	460	873	
	6					40	147	307	582	
	8					29	110	230	436	
	10					24	89	184	350	
	11.5					21	77	160	304	
	13					18	68	141	269	
FESCUE & RYEGRASS	4							115	218	
	6							77	146	
	8							57	109	
	10							47	88	
	11.5							40	76	
	13							36	67	

***Note**: Due to the nature of this equipment that makes use of centrifugal principles, it is NOT possible to have an exact spreading chart for the following reasons: Varying product sizes, specific gravity, treatment of product, moisture content, inert material in product, number, and size of lumps in product, different mixtures of products and roughness of terrain.

Metric Spreading Chart for Fertilizer & Seed*

	TRACTOR SPEED (km/h)	KILOGRAMS PER HECTARE AT VARIOUS GATE SETTINGS								
		1	2	3	4	5	6	7	8	8.5
RED CLOVER	4					60	226	451	869	
	6					40	150	301	578	
	8					29	113	225	434	
	10					24	91	181	347	
	11.5					21	79	157	302	
	13					18	70	139	268	
KENTUCKY BLUE GRASS & BERMUDA GRASS	4					41	177	421	893	
	6					28	118	280	595	
	8					20	88	210	446	
	10					16	70	168	357	
	11.5					14	61	146	311	
	13					12	54	129	275	
SUDAN GRASS	4						66	177	367	
	6						44	118	244	
	8						33	89	184	
	10						26	71	147	
	11.5						23	61	127	
	13						20	54	113	
BARLEY	4						34	110	252	
	6						23	73	167	
	8						17	55	125	
	10						14	44	101	
	11.5						12	38	88	
	13						10	33	78	
RYE	4						34	110	252	
	6						23	73	167	
	8						17	55	125	
	10						14	44	101	
	11.5						12	38	88	
	13						10	33	78	

***Note**: Due to the nature of this equipment that makes use of centrifugal principles, it is NOT possible to have an exact spreading chart for the following reasons: Varying product sizes, specific gravity, treatment of product, moisture content, inert material in product, number, and size of lumps in product, different mixtures of products and roughness of terrain.

Polyester Hopper Cover

Refer to Figure 4-1:

A black vinyl coated polyester cover is offered as an accessory to keep material in the hopper and elements out. The cover is drawn up tight around the top of the hopper with a 3/8" (10 mm) shock cord and tied to secure it in place.

Land Pride Hopper Covers

Part No.	Part Description
891-145C	PTS500 HOPPER COVER
891-146C	PTS700 HOPPER COVER

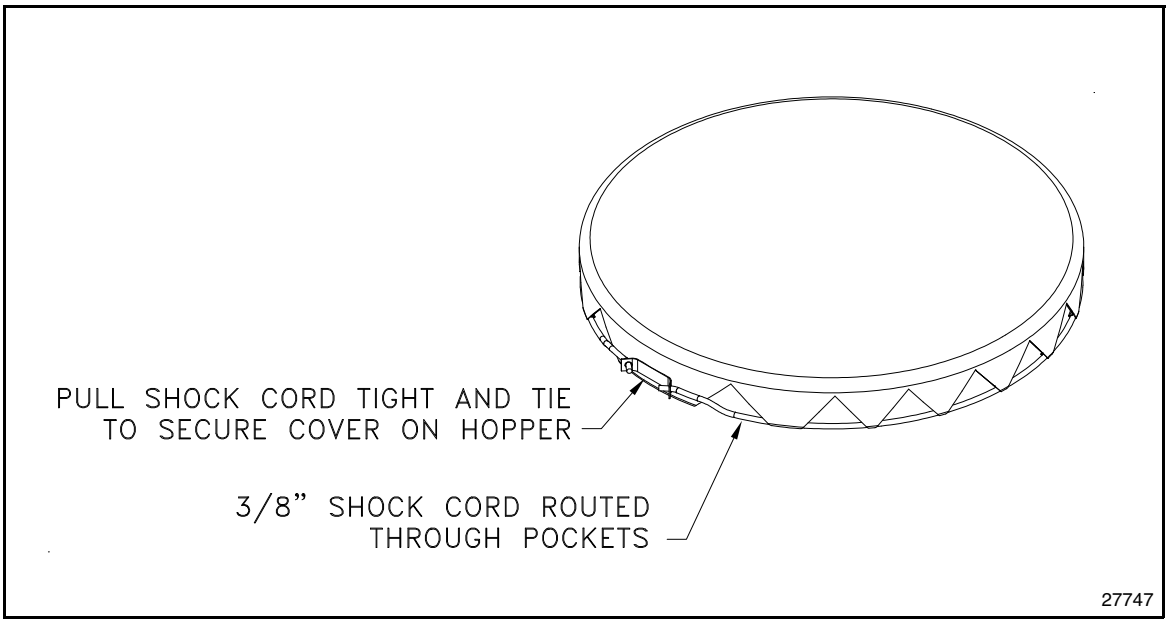

Polyester Hopper Cover
Figure 4-1

General Maintenance

Proper servicing and adjustments are key to the long life of any implement. With careful inspection and routine maintenance, you can avoid costly downtime and repair.

Check all bolts after using the unit for several hours to be sure they are tight. Replace any worn, damaged or illegible safety labels by obtaining new labels from your Land Pride Dealer.

The parts on your Broadcast Spreader have been specially designed and should only be replaced with genuine Land Pride parts. Do not alter the spreader in a way which will adversely affect its performance.

WARNING

To avoid serious injury or death:

- *Allow only persons to perform maintenance on this implement who have been properly trained in its safe operation.*
- *Make sure controls are all in the neutral position or park before starting the power machine.*
- *Perform scheduled maintenance. Check for loose hardware, missing parts, broken parts, structural cracks, and excessive wear. Make repairs before putting the implement back into service.*
- *Maintenance, adjustments, and cleaning of the Broadcast Spreader must always be done with unit resting on the ground or on stable, non-concrete supports and with tractor/vehicle park brakes applied, engine turned off, and ignition key removed.*
- *Always wear non slip shoes, gloves, protective clothing, safety glasses, and a breathing mask capable of filtering powders when cleaning, servicing, lubricating, and filling your Broadcast Spreader to prevent injury to the body and/or injury from inhalation of product. Refer to chemical manufacturers' labels for specific protective requirements.*
- *Do not alter implement or replace parts on the implement with other brands. Other brands may not fit properly or meet OEM (Original Equipment Manufacturer) specifications. They can weaken the integrity and impair the safety, function, performance, and life of the implement. Replace parts only with genuine OEM parts.*

IMPORTANT: In the event of irregular or unusual vibrations, stop the machine immediately, and assess the problem. Make repairs before continuing.

1. Check all bolts to be sure they are tight.
2. Check spreader drive shaft to make sure it is secured to the gearbox.
3. Pull spreader empty several feet to make sure spreader disc and wheels are rotating.
4. Check distributor vanes and spreader disc for wear. Replace if worn out.
5. Check discharge gates and lifting mechanism for wear and mechanical operation.
6. Lubricate axle hubs, bearings, and gearbox as noted under Lubrication on page 26.
7. Repaint parts where paint is worn or scratched to prevent rust.
8. Replace any worn, damaged, or illegible safety labels by obtaining new labels from your Land Pride Dealer.

Long-Term Storage

Clean, inspect, service, and make necessary repairs to the implement when storing it for long periods and at the end of the season. This will help ensure the unit is ready for field use the next time you hook-up to it.

IMPORTANT: Particles of fertilizer are corrosive and should be thoroughly cleaned from the machine before parking it for a long period of time.

Clean the Broadcast Spreader after each use.

Touch-Up Paint

Part No.	Part Description
821-070C	GLOSS BLACK ENAMEL SPRAY CAN
821-070CTU	GLOSS BLACK ENAMEL BOTTLE & BRUSH
821-070CQT	GLOSS BLACK ENAMEL QUART
821-070CGL	GLOSS BLACK ENAMEL GALLON

1. Empty hopper of product before unhooking unit from tractor.
2. Clean off all particles of fertilizer, dirt, and grease that may have accumulated on the frame, hopper, and moving parts.
3. Wash the Broadcast Spreader thoroughly inside and outside with a garden hose. Make sure all particles of fertilizer have been removed. Allow to completely dry before closing gates.
4. Inspect for loose, damaged, or worn parts. Make needed adjustments, tighten loose parts, and replace damaged and worn parts.
5. Lubricate as noted in the *Lubrication* portion of this section starting on page 26.
6. Repaint parts where paint is worn or scratched to prevent rust. Ask your dealer for Aerosol Land Pride touch-up paint.
7. Replace any worn, damaged, or illegible safety labels by obtaining new labels from your Land Pride Dealer.
8. Store spreader in a clean, dry place away from atmospheric conditions to protect unit from further deterioration.
9. Make sure the spreader is stable. Use auxiliary supports if necessary to prevent unit from tipping over accidentally.

Lubrication Points

Lubrication Legend

Multi-purpose spray lube

Multi-purpose grease lube

Multi-purpose oil lube

Intervals in hours at which lubrication is required

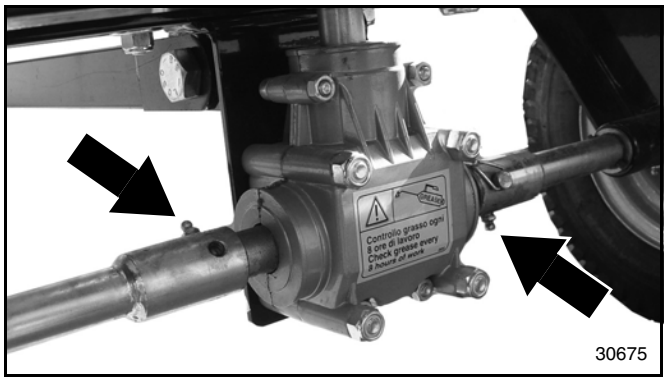

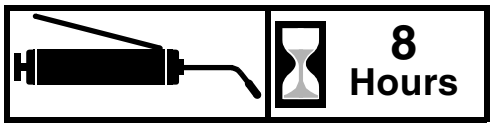

Axle Connection

2 Zerks

Type of Lubrication: Multi-purpose Grease

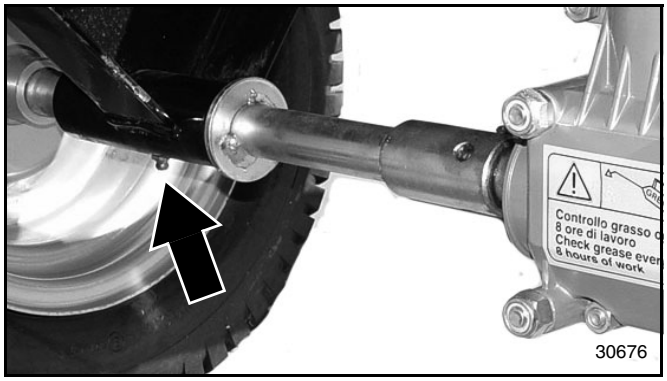

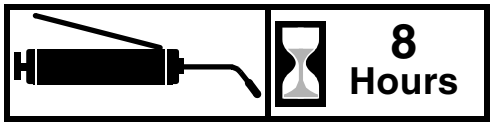

Axle Bearings

2 Zerks

Type of Lubrication: Multi-purpose Grease

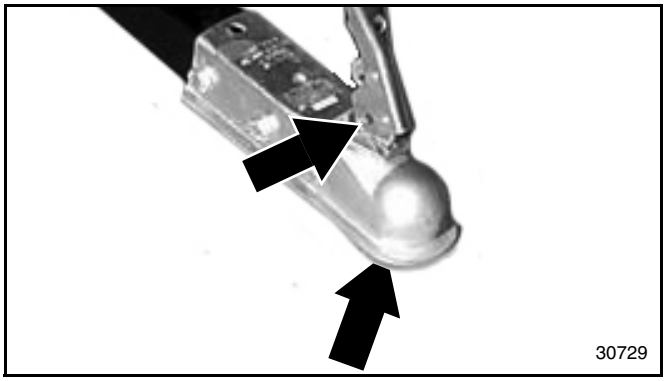

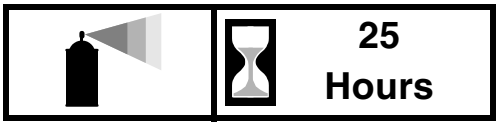

Ball Hitch

Location: In ball receiver and handle pivot.

Type of Lubrication: Spray Lubricant

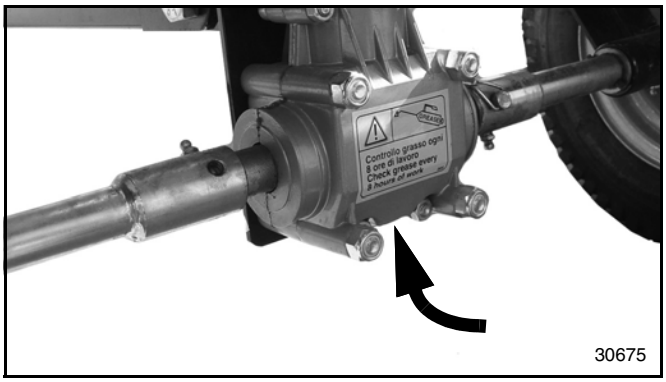

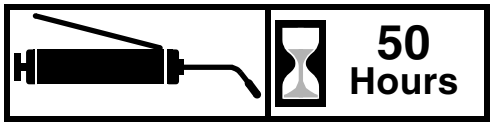

Gearbox

Location: Remove plug on bottom side.

Type of Lubrication: Lithium Grease EP1

Capacity: .81 oz (.023 kg)

PTS500 & PTS700 Broadcast Spreaders

Description	Specifications & Capacities	
Model Numbers	**PTS500**	**PTS700**
Min. Tractor Horsepower	15 horsepower (11.2 kW)	18 horsepower (13.4 kW)
Capacity (Maximum Cu.ft. & pounds)	5.83 cu. ft. (350 lbs.) [0.17 m³ (158.8 kg)]	9.18 cu. ft. (563 lbs.) [0.26 m³ (255.4 kg)]
Overall Length	59" (1.50 m)	59" (1.50 m)
Overall Width	41" (1.04 m)	41" (1.04 m)
Loading Height	51" (1.30 m)	57" (1.45 m)
Hopper Width	35" (0.89 m)	41" (1.04 m)
Weight	165 lbs. (74.8 kg)	176 lbs. (79.8 kg)
Hopper Material	Plastic	
Frame Construction and Finish	Steel welded frame with baked on epoxy finish	
Spreader Disc & Distributor Vane Material	All stainless steel	
Number of Vanes and Adjustable positions	Four adjustable vanes in four different positions	
Hitch Type	2" Ball	
Net Spreadable Width	26" - 40' (.66 m - 12.19 m)	
Ground Covered per Hour	7 to 15 acres/hr. (2.8 - 6.1 hectare/hr.)	

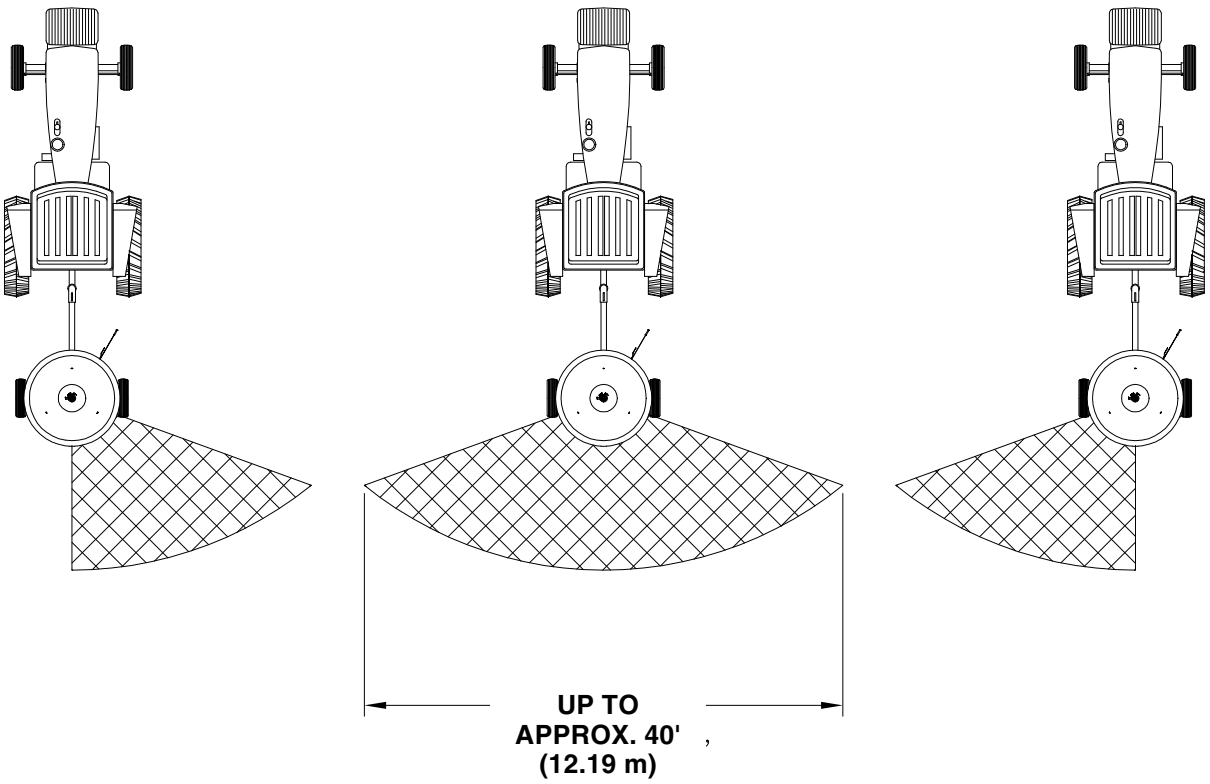

30677

PTS500 & PTS700 Broadcast Spreaders

Features	Benefits
Large hopper capacity	To meet specific customer needs.
Spin-type broadcast	For even spreading and productive coverage up to 40 ft.
One piece molded polyethylene hopper	Plastic construction to eliminate corrosion. Seamless for accurate and consistent emptying.
Heavy-duty tubular frame	Supports the weight when full.
Pull type hitch	For attachment to a wide range of tractors and vehicles.
Adjustable tongue	Keeps hopper level at varying hitch heights.
Tow hitch	Handles up to 800 pounds towing capacity. (50 pounds maximum tongue weight.)
Greasable Axle	Helps with longevity of axle.
Shielded Front	Prevents spreading of material in front of spreader.
Stainless steel distributor vanes	Protects from corrosive material to enhance longevity.
Adjustable distributor vanes	Four adjustable positions to obtain maximum spreading precision and uniformity.
Stainless steel orifice doors	Protects from corrosive material enabling doors to operate smoothly.
Plated adjustment levers	Protects from corrosive material to enhance longevity.

Troubleshooting Chart

Problem	Cause	Solution
Field Skips	Not traveling parallel to the preceding pass at half the spreading width away from the pass.	Travel parallel to the preceding pass at half the spreading width away from the pass with slight overlapping of each pass.
		Set spreader to disperse product at half the rate and go over the field plot twice using a 2nd pattern that crosses the first pattern.
	Wind is blowing the product around.	Spread product on a calm non-windy day.
Spreading width not suitable	Travel speed is incorrect.	Slow down to decrease spreading width and speed up to increase spreading width.
	Distributor vanes not adjusted correctly.	Readjust distributor vanes.
	Wind is blowing the product around.	Spread product on a calm non-windy day.
Spreading pattern not correct	Gate openings not adjust correctly.	Readjust gate openings.
	Distributor vanes not adjusted correctly.	Readjust distributor vanes.
Product won't discharge properly out the hopper	Product is too wet or humid.	Use dry product only.
	Hopper exits are clogged.	Clean hopper exits.
Spreading chart is inconsistent with actual discharge rate	Varying product size, specific gravity, treatment, moisture content, inert material in product, lumps, different mixtures, and roughness of terrain can cause the chart to be inconsistent.	Make adjustments to gate setting and speed to achieve desired discharge rate. Refer to "Calibrate Hopper Discharge Rate" on page 12.
Uneven distribution of product	Spreader disc not parallel to the ground.	Readjust telescopic bar.
	Spreader disc not properly cleaned.	Clean spreader disc & distribution vanes.
	Spreading disc parts worn or damaged.	Replace spreader disc and/or vanes.
	Roughness of terrain.	Slow down and decrease gate openings.
	Wind is blowing the product around.	Spread product on a calm non-windy day.

Torque Values Chart for Common Bolt Sizes

Bolt Size (inches)	Bolt Head Identification: Grade 2		Grade 5		Grade 8	
in-tpi [1]	N · m [2]	ft-lb [3]	N · m	ft-lb	N · m	ft-lb
1/4" - 20	7.4	5.6	11	8	16	12
1/4" - 28	8.5	6	13	10	18	14
5/16" - 18	15	11	24	17	33	25
5/16" - 24	17	13	26	19	37	27
3/8" - 16	27	20	42	31	59	44
3/8" - 24	31	22	47	35	67	49
7/16" - 14	43	32	67	49	95	70
7/16" - 20	49	36	75	55	105	78
1/2" - 13	66	49	105	76	145	105
1/2" - 20	75	55	115	85	165	120
9/16" - 12	95	70	150	110	210	155
9/16" - 18	105	79	165	120	235	170
5/8" - 11	130	97	205	150	285	210
5/8" - 18	150	110	230	170	325	240
3/4" - 10	235	170	360	265	510	375
3/4" - 16	260	190	405	295	570	420
7/8" - 9	225	165	585	430	820	605
7/8" - 14	250	185	640	475	905	670
1" - 8	340	250	875	645	1230	910
1" - 12	370	275	955	705	1350	995
1-1/8" - 7	480	355	1080	795	1750	1290
1-1/8" - 12	540	395	1210	890	1960	1440
1-1/4" - 7	680	500	1520	1120	2460	1820
1-1/4" - 12	750	555	1680	1240	2730	2010
1-3/8" - 6	890	655	1990	1470	3230	2380
1-3/8" - 12	1010	745	2270	1670	3680	2710
1-1/2" - 6	1180	870	2640	1950	4290	3160
1-1/2" - 12	1330	980	2970	2190	4820	3560

Bolt Size (Metric)	Bolt Head Identification: Class 5.8		Class 8.8		Class 10.9	
mm x pitch [4]	N · m	ft-lb	N · m	ft-lb	N · m	ft-lb
M 5 X 0.8	4	3	6	5	9	7
M 6 X 1	7	5	11	8	15	11
M 8 X 1.25	17	12	26	19	36	27
M 8 X 1	18	13	28	21	39	29
M10 X 1.5	33	24	52	39	72	53
M10 X 0.75	39	29	61	45	85	62
M12 X 1.75	58	42	91	67	125	93
M12 X 1.5	60	44	95	70	130	97
M12 X 1	90	66	105	77	145	105
M14 X 2	92	68	145	105	200	150
M14 X 1.5	99	73	155	115	215	160
M16 X 2	145	105	225	165	315	230
M16 X 1.5	155	115	240	180	335	245
M18 X 2.5	195	145	310	230	405	300
M18 X 1.5	220	165	350	260	485	355
M20 X 2.5	280	205	440	325	610	450
M20 X 1.5	310	230	650	480	900	665
M24 X 3	480	355	760	560	1050	780
M24 X 2	525	390	830	610	1150	845
M30 X 3.5	960	705	1510	1120	2100	1550
M30 X 2	1060	785	1680	1240	2320	1710
M36 X 3.5	1730	1270	2650	1950	3660	2700
M36 X 2	1880	1380	2960	2190	4100	3220

[1] in-tpi = nominal thread diameter in inches-threads per inch

[2] N· m = newton-meters

[3] ft-lb= foot pounds

[4] mm x pitch = nominal thread diameter in millimeters x thread pitch

Torque tolerance + 0%, -15% of torquing values. Unless otherwise specified use torque values listed above.
All locknuts or lubricated fasteners: Use 75% of torque value. (i.e. 1/2"-13 GR5 = 76 ft-lb; 75% of 76 or .75 x 76 = 57 ft-lb)

Tire Inflation Chart

Tire Size	Inflation PSI
16 x 6.5 x 8	42

Warranty

Land Pride warrants to the original purchaser that this Land Pride product will be free from defects in material and workmanship beginning on the date of purchase by the end user according to the following schedule when used as intended and under normal service and conditions for personal use.

Overall Unit: One year Parts and Labor

Gearbox: One year Parts and Labor

This Warranty is limited to the repair or replacement of any defective part by Land Pride and the installation by the dealer of any such replacement part, and does not cover common wear items such as blades, belts, tines, etc. Land Pride reserves the right to inspect any equipment or parts which are claimed to have been defective in material or workmanship.

This Warranty does not apply to any part or product which in Land Pride's judgment shall have been misused or damaged by accident or lack of normal maintenance or care, or which has been repaired or altered in a way which adversely affects its performance or reliability, or which has been used for a purpose for which the product is not designed. Misuse also specifically includes failure to properly maintain oil levels, grease points, and driveline shafts.

Claims under this Warranty must be made to the dealer which originally sold the product and all warranty adjustments must be made through such dealer. Land Pride reserves the right to make changes in materials or design of the product at any time without notice.

This Warranty shall not be interpreted to render Land Pride liable for damages of any kind, direct, consequential, or contingent to property. Furthermore, Land Pride shall not be liable for damages resulting from any cause beyond its reasonable control. This Warranty does not extend to loss of crops, any expense or loss for labor, supplies, rental machinery or for any other reason.

No other warranty of any kind whatsoever, express or implied, is made with respect to this sale; and all implied warranties of merchantability and fitness for a particular purpose which exceed the obligations set forth in this written warranty are hereby disclaimed and excluded from this sale.

This Warranty is not valid unless registered with Land Pride within 30 days from the date of purchase by the end user.

IMPORTANT: The Online Warranty Registration should be completed by the dealer at the time of purchase. This information is necessary to provide you with quality customer service.

Model Number _____ **Serial Number** _____

Corporate Office: P.O. Box 5060
Salina, Kansas 67402-5060 USA
www.landpride.com