Trip Edge Blades

AP-TE3596 & AP-TE35108

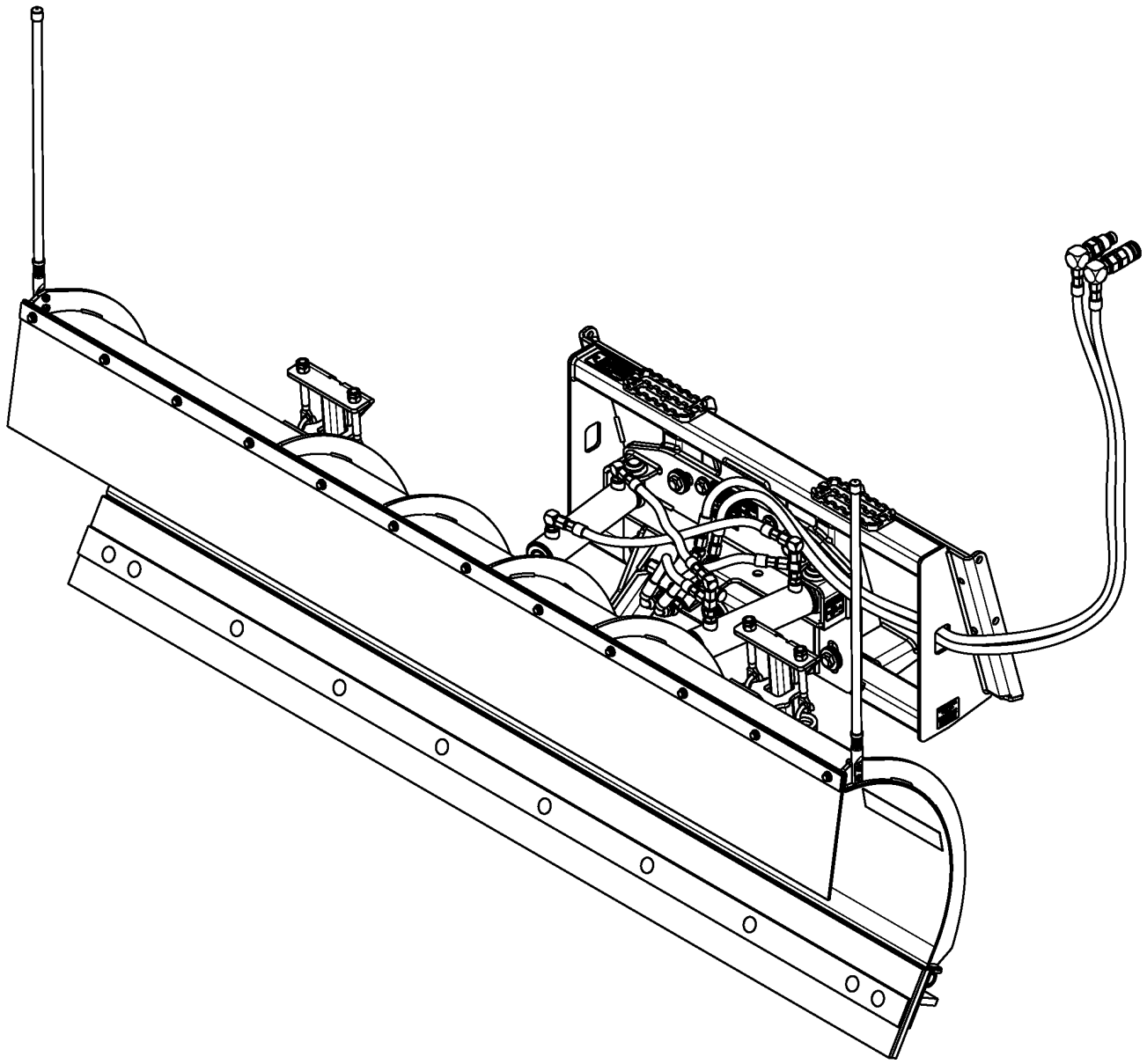

301-620PK
Parts Manual

Read the Operator's Manual entirely. When you see this symbol, the subsequent instructions and warnings are serious - follow without exception. Your life and the lives of others depend on it!

© Copyright 2022 Printed 08/29/2022

Cover photo may show optional equipment not supplied with standard unit.

Table Of Contents

Section 1: Introduction **2**
- *Using This Manual* *2*
- *Manual Replacement Information* *2*
- *Manual Revisions* *2*
- *Touch-up Paint* *2*
- *Hardware Legend* *3*
- *Replacement Hardware* *3*
- *Serial Numbers* *3*
- *Part Number Service Coding* *3*

Section 2: Mainframes **4**
- *Hitch* *4*
- *Moldboard* *6*

Section 3: Hydraulics **8**
- *Hydraulic Components* *8*
- *Hydraulic Cylinder (850-102C) Red Lion* *10*

Section 4: Decals & Touch-Up Paint **12**
- *Decal Placement* *12*
- *Touch-up Paints - Kubota* *14*

Section 5: Options & Accessories **16**
- *Cutting Edge Poly* *16*
- *Cutting Edge Steel* *18*
- *Deflector, Top Edge* *20*
- *Orange Markers* *22*

This Page Intentionally Left Blank

General Information

Using This Manual

This manual is divided into sections. The first section contains General Information. The remaining sections divide the machine into segments (i.e. Frames, Drives, Hydraulics, etc.) which illustrate and list all parts. A Parts Number Index is located at the back of the book.

The Kubota parts in this manual are specially designed for this machine and should be replaced with Kubota parts only.

The information in this manual is current at time of printing. Some parts may change to assure top performance.

Right-hand and left-hand as used in this manual are determined by facing the direction the machine will travel while in use.

Below is an example of two facing pages from a parts manual. Familiarize yourself with the type of information contained on these pages.

Manual Replacement Information

Replacement manuals are available. Refer to our website at www.landpride.com or e-mail us at lit@landpride.com for additional information. Our website continues to provide the most up-to-date manuals available.

Touch-up Paint

Repaint parts where paint is worn or scratched to prevent rust. Aerosol cans and touch-up bottles with brush applicator are available through your local dealer. Also available are quart and gallon size paints. Add QT or GL to end of the Aerosol P/N.

Kubota color descriptions and part numbers are listed on the "Kubota Touch-Up Paints" page in the "Decals" section of this book.

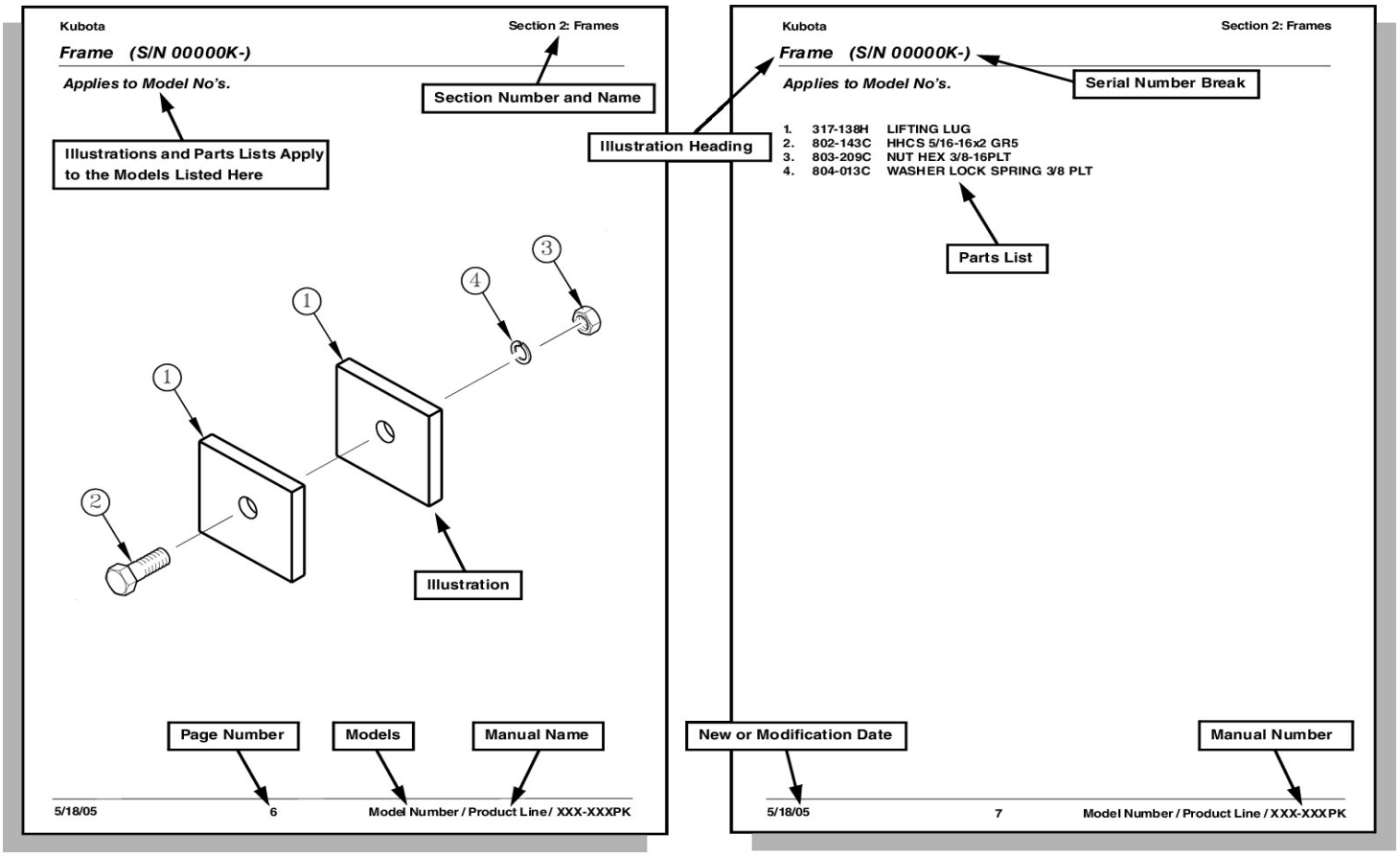

© Copyright 2022. All rights Reserved

Kubota provides this publication "as is" without warranty of any kind, either expressed or implied. While every precaution has been taken in the preparation of this manual, Kubota assumes no responsibility for errors or omissions. Neither is any liability assumed for damages resulting from the use of the information contained herein. Kubota reserves the right to revise and improve its products as it sees fit. This publication describes the state of this product at the time of its publication, and may not reflect the product in the future. The illustrations in this manual are not intended for safe and proper assembly or disassembly of equipment. The illustrations are intended for ordering parts only.

Kubota is a registered trademark.

All other brands and product names are trademarks or registered trademarks of their respective holders.

Printed in the United States of America.

General Information

Hardware Legend

AR	As Required
BLADE	Blade Bolt
C	Cap Screw
CP	Cotter Pin
CPHSSS	Cup Point Hex Socket Set Screw
CPSHSS	Cup Point Square Head Set Screw
CPSQHSS	Cup Point Square Head Set Screw
CRFCHMS3	Cross Recess Flat Countersunk Head Machine Screw
CRPHMS	Cross Recess Pan Head Machine Screw
CRPHTFS	Cross Recess Pan Head Thread Forming
CRRHMS	Cross Recess Round Head Machine Screw
CRTHMS	Cross Recess Truss Head Machine Screw
CSNB	Countersunk Square Neck Bolt
FHMS	Flat Head Machine Screw
FTC	Full Thread Cap Screw
H	Hex Nut
HCLN	Hex Center Lock Nut
HFLCS	Hex Flange Lock Cap Screw
HFS	Hex Flange Screw
HFSLN	Hex Flange Serrated Lock Nut
HFSS	Hex Flange Serrated Screw
HHCS	Hex Head Cap Screw or Metric Bolt
HSBHCS	Hex Socket Button Head Cap Screw
HSFCHCS	Hex Socket Flat Countersunk Head Cap Screw
HSHCS	Hex Socket Head Cap Screw
HSSS	Hex Socket Head Screw
HTLN	Hex Top Lock Nut
HWHCS	Hex Washer Head Cap Screw

HWHMS	Hex Washer Head Machine Screw
HXBHCS	Hex Socket Button Head Cap Screw
J	Hex Jam Nut
JIC	37 Degree Tapered Thread
L	Helical Spring Lock Washer
LUG	Lug Bolt
NFC	National Fine Cap Screw
NPSM	National Pipe Straight Mechanical
NPTF	National Pipe Taper Fuel
P	Wide Plain Washer
PHMS	Pan Head Machine Screw
PLOW	Plow Bolt
RHMS	Round Head Machine Screw
RHSNB	Round Head Square Neck Bolt
SCREW LEVELING	Leveling Screw
SCREW THUMB	Thumb Screw
SCREW WELD	Weld Screw
SFCHMS	Slotted Flat Countersunk Head Machine Screw
SFHMS	Slotted Fillister Head Machine Screw
SP	Special
SP SCREW	Special Screw
SQHSS	Square Head Set Screw
SRHMS	Slotted Round Head Machine Screw
SSS	Socket Set Screw
STCS	Self Tapping Cap Screw
STHMS	Slotted Truss Head Machine Screw
WHEEL	Wheel Studs and Hub Long Bolts
WING	Wing Bolt

Replacement Hardware

The **Hardware Legend** above lists hardware abbreviations used in the parts list. All bolts and nuts are Grade 5 unless otherwise noted. The use of improper grades of hardware can result in personal injury, damage to equipment, or loss of property.

Part Number Service Coding

Within the parts list some part numbers are coded for revisions and interchangeability. See notations in revision column.

Serial Numbers

Always use the serial and model number when ordering parts. Refer to the Operator's Manual for serial number plate location.

(S/N 20001K+)	Includes serial numbers 20001K and above (to the latest number)
(S/N 10001K to 20000K)	Includes serial numbers between and including 10001K and 20000K
(S/N 10000K-)	Includes serial numbers 10000K and below (to the earliest number)

Hitch

Applies to Models: AP-TE35108, AP-TE3596

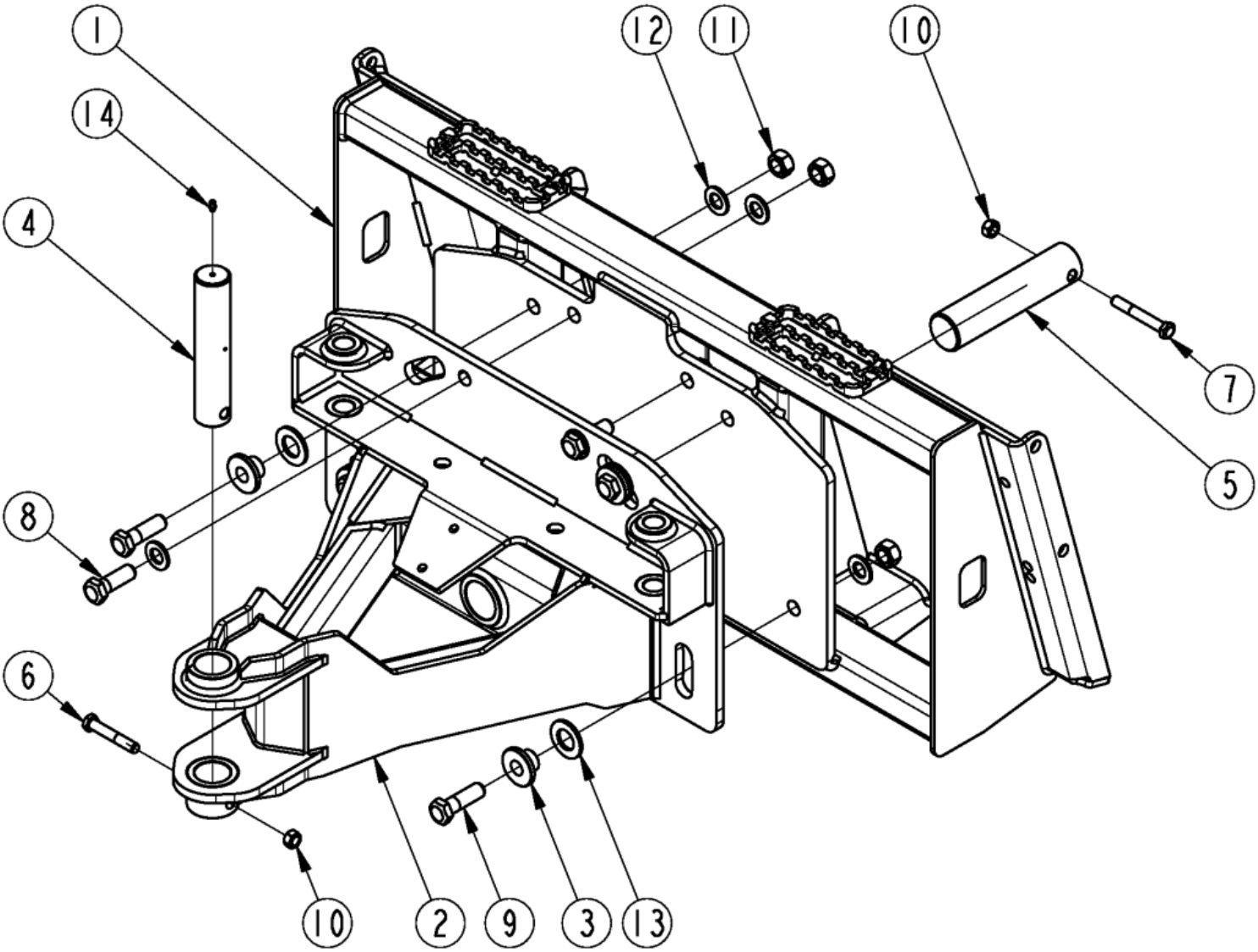

Hitch

Applies to Models: AP-TE35108, AP-TE3596

Ref.	Part No.	Part Description	Comments
	DWG 70930	Image No.	
1	301-567H	HITCH, TE35	
2	301-568H	FRAME, TE35	
3	301-601D	FLOAT BUSHING	
4	301-619V	PIVOT PIN	Includes zerk #14
5	301-725D	FLOAT PIN	
6	802-039C	HHCS 1/2-13X3 GR5	
7	802-041C	HHCS 1/2-13X3 1/2 GR5	
8	802-065C	HHCS 3/4-10X2 1/4 GR5	
9	802-212C	HHCS 3/4-10X2 1/2 GR5	
10	803-019C	NUT LOCK 1/2-13 PLT	
11	803-026C	NUT LOCK 3/4-10 PLT	
12	804-025C	WASHER FLAT 3/4 SAE PLT	
13	804-147C	WASHER FLAT 1" HARDENED	
14	800-001C	GREASE ZERK STRAIGHT 1/4-28	

Moldboard

Applies to Models: AP-TE35108, AP-TE3596

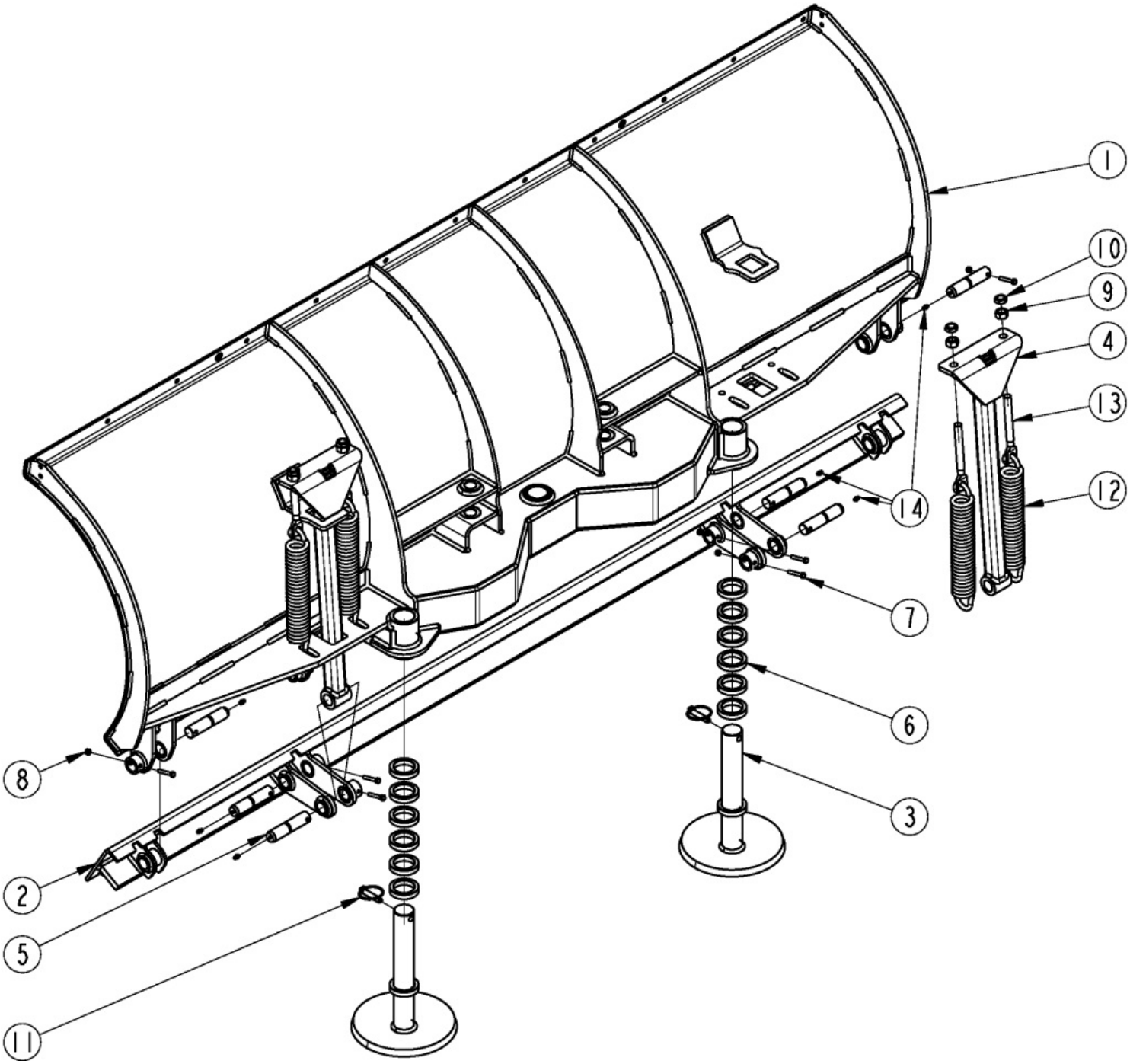

Moldboard

Applies to Models: AP-TE35108, AP-TE3596

Ref.	Part No.	Part Description	Comments
	DWG 70923	Image No.	
1	301-569H	TRIP EDGE MOLDBOARD, 96	
1	301-570H	TRIP EDGE MOLDBOARD, 108	
2	301-577H	TRIP EDGE 96	
2	301-573H	TRIP EDGE 108	
3	301-596H	SKID SHOE	
4	301-597H	SPRING TRIP LINKAGE	
5	301-602V	PIN CLVS 1.0X4.03 USBL	Includes grease zerk
6	301-780D	SKID SHOE SPACER	
7	802-370C	HHCS 1/4-20X1 3/4 GR5	
8	803-007C	NUT LOCK 1/4-20 PLT	
9	803-021C	NUT HEX 5/8-11 PLT	
10	803-023C	NUT HEX JAM 5/8-11 PLT	
11	805-341C	PIN LINCH 7/16 X 2	
12	807-379C	SPRING EXT 2.0ODX.363X12.5	
13	842-418C	SPADE BOLT 5/8-11X6 GR2 PLT	
14	800-001C	GREASE ZERK STRAIGHT 1/4-28	

Hydraulic Components

Applies to Models: AP-TE35108, AP-TE3596

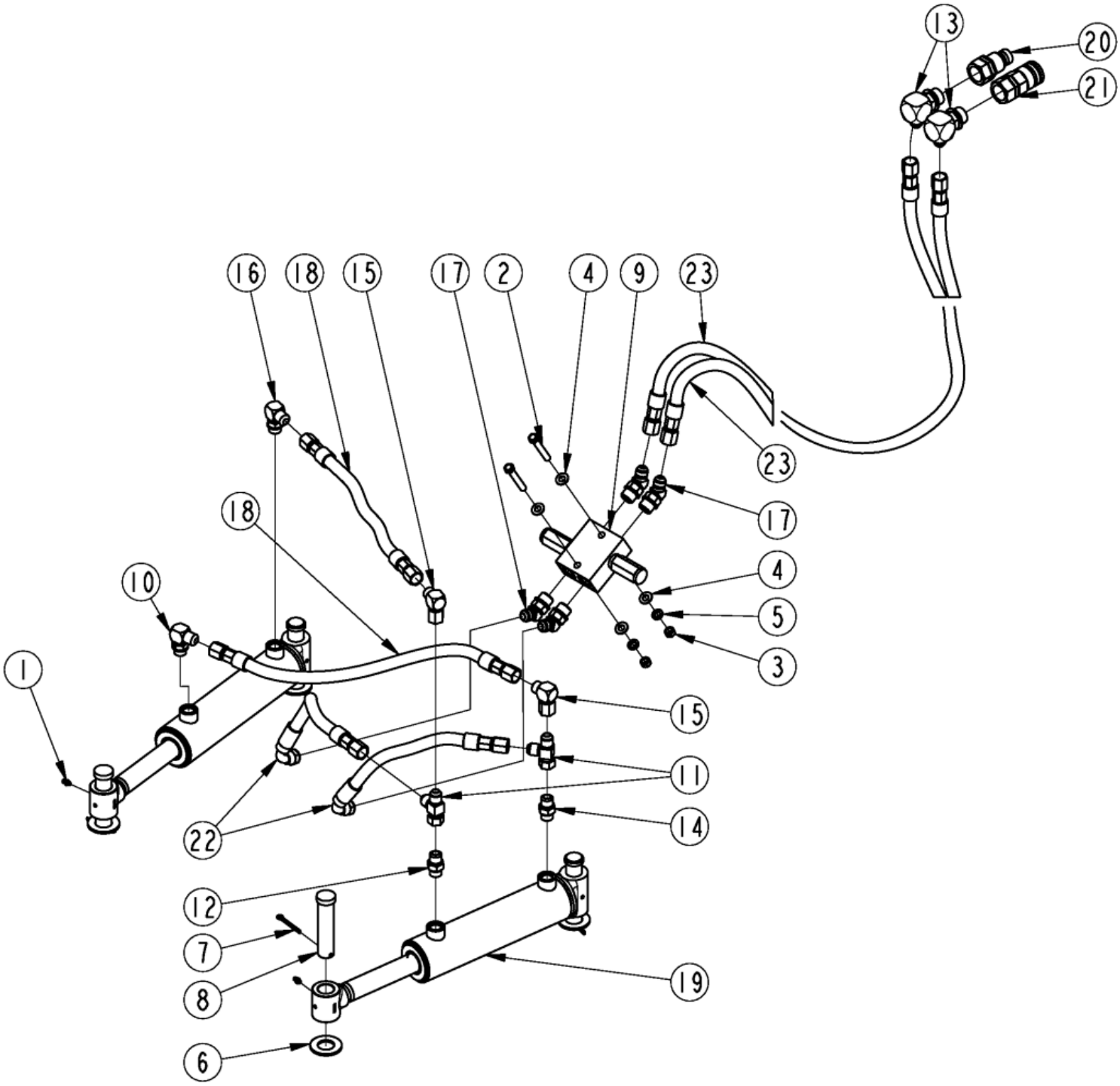

Hydraulic Components

Applies to Models: AP-TE35108, AP-TE3596

Ref.	Part No.	Part Description	Comments
	DWG 70933	Image No.	
1	800-001C	GREASE ZERK STRAIGHT 1/4-28	
2	802-114C	HHCS 3/8-16X2 1/2 GR5	
3	803-014C	NUT HEX 3/8-16 PLT	
4	804-012C	WASHER FLAT 3/8 SAE PLT	
5	804-013C	WASHER LOCK SPRING 3/8 PLT	
6	804-029C	WASHER FLAT 1 SAE	
7	805-017C	PIN COTTER 3/16 X 1 3/4 PLT	
8	805-493C	PIN CLVS 1.0X4.20 USBL	
9	810-385C	VALVE CYLINDER CUSHION 1600PSI	
10	811-063C	EL 3/4MJIC 3/4MORB	
11	811-073C	TE 3/4MJIC 3/4MJIC 3/4FJIC	
12	811-088C	AD 3/4MORB 3/4MJIC	
13	811-091C	EL 3/4MJIC 1 1/16MORB	Or #24 depending on mount style
14	811-114C	ORAD 5/64 3/4MJIC 3/4MORB	
15	811-150C	EL 3/4FJIC 3/4MJIC	
16	811-153C	OREL 1/16 3/4MJIC 3/4MORB	
17	811-778C	EL 45 7/8MORB 3/4MJIC	
18	841-776C	HH3/8R2 025 3/4FJIC SLVNG	
19	850-102C	CYL 2.5X8X1.25 ROD WLD	
20	851-947C	CUP 1 1/16FORB MALE QUICK CPLR	
21	851-948C	CUP 1 1/16FORB FML QUICK CPLR	
22	861-237C	HH3/8R16 018 3/4FJIC(1 90) SLV	
23	861-244C	HH1/2R2 080 3/4FJIC SLV	
24	811-205C	AD 3/4MJIC 1 1/16MORB	Or #13 depending on mount style

Hydraulic Cylinder (850-102C) Red Lion

Applies to Models: AP-TE35108, AP-TE3596

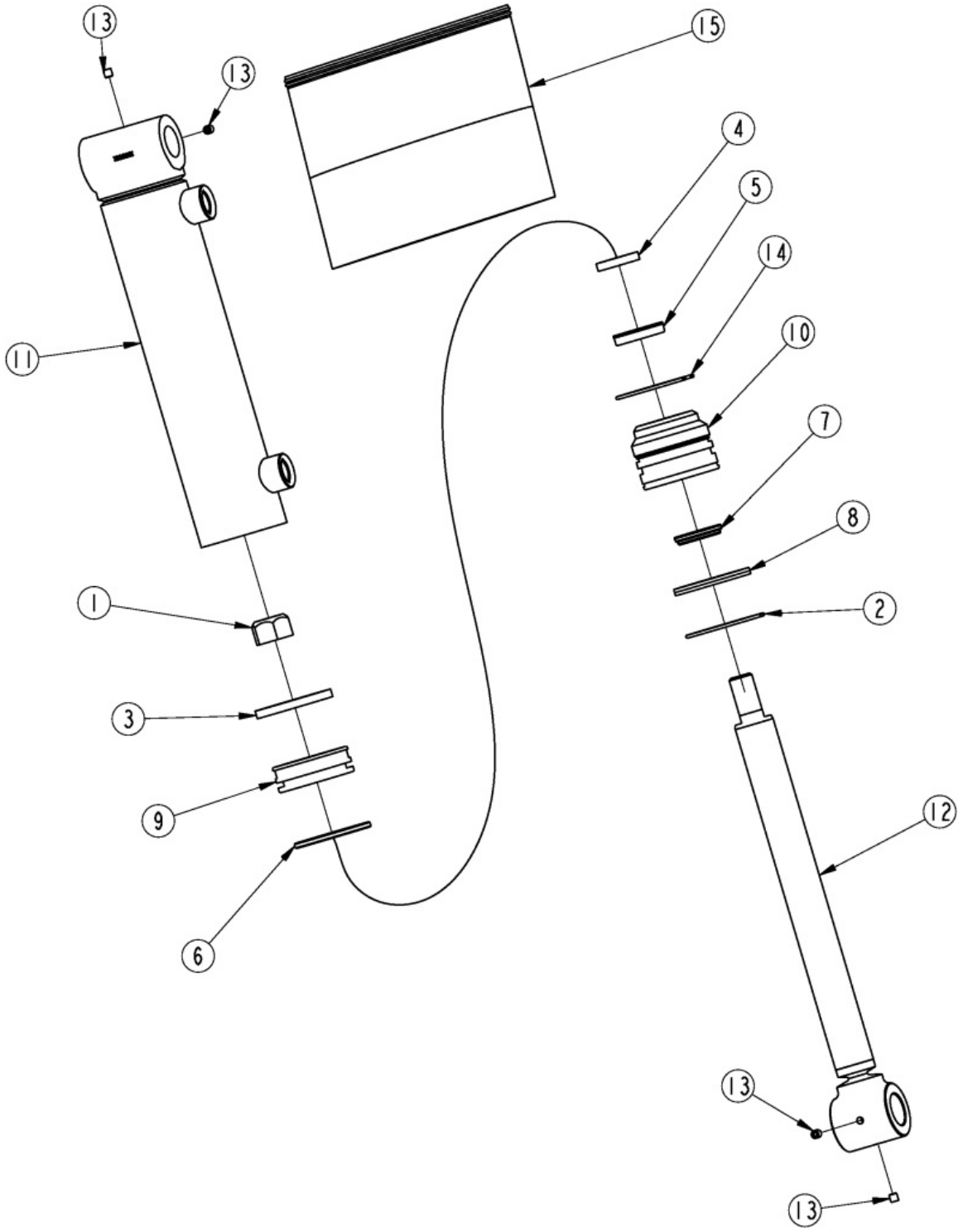

Hydraulic Cylinder (850-102C) Red Lion

Applies to Models: AP-TE35108, AP-TE3596

Ref.	Part No.	Part Description	Comments
	DWG 39622	Image No.	
	850-102C	CYL 2.5X8X1.25 ROD WLD *	Complete assembly
1	130556	MON PISTON NUT	
2	138098	MON RETAINING RING EXTRNL 2.50	
3	N/A	NOT AVAILABLE	Only available in seal kit #15
4	N/A	NOT AVAILABLE	Only available in seal kit #15
5	N/A	NOT AVAILABLE	Only available in seal kit #15
6	N/A	NOT AVAILABLE	Only available in seal kit #15
7	N/A	NOT AVAILABLE	Only available in seal kit #15
8	N/A	NOT AVAILABLE	Only available in seal kit #15
9	258818	MON PISTON2.50-.750-TSS-ISO-WR	
10	258872	MON CYL HEAD 2.50-1.25-RR-TSS	
11	498649	MON TUBE WELDT 1.25-8.00	
12	498650	MON ROD WELDT 1.25-8.00	
13	801-045C	SCREW SET 1/4-28X1/4 KNL CUP	
14	M138011	MON RETAINING RING INTRNL 2.50	
15	850-191C	MON SEAL KIT 649199	

Decal Placement

Applies to Models: AP-TE35108, AP-TE3596

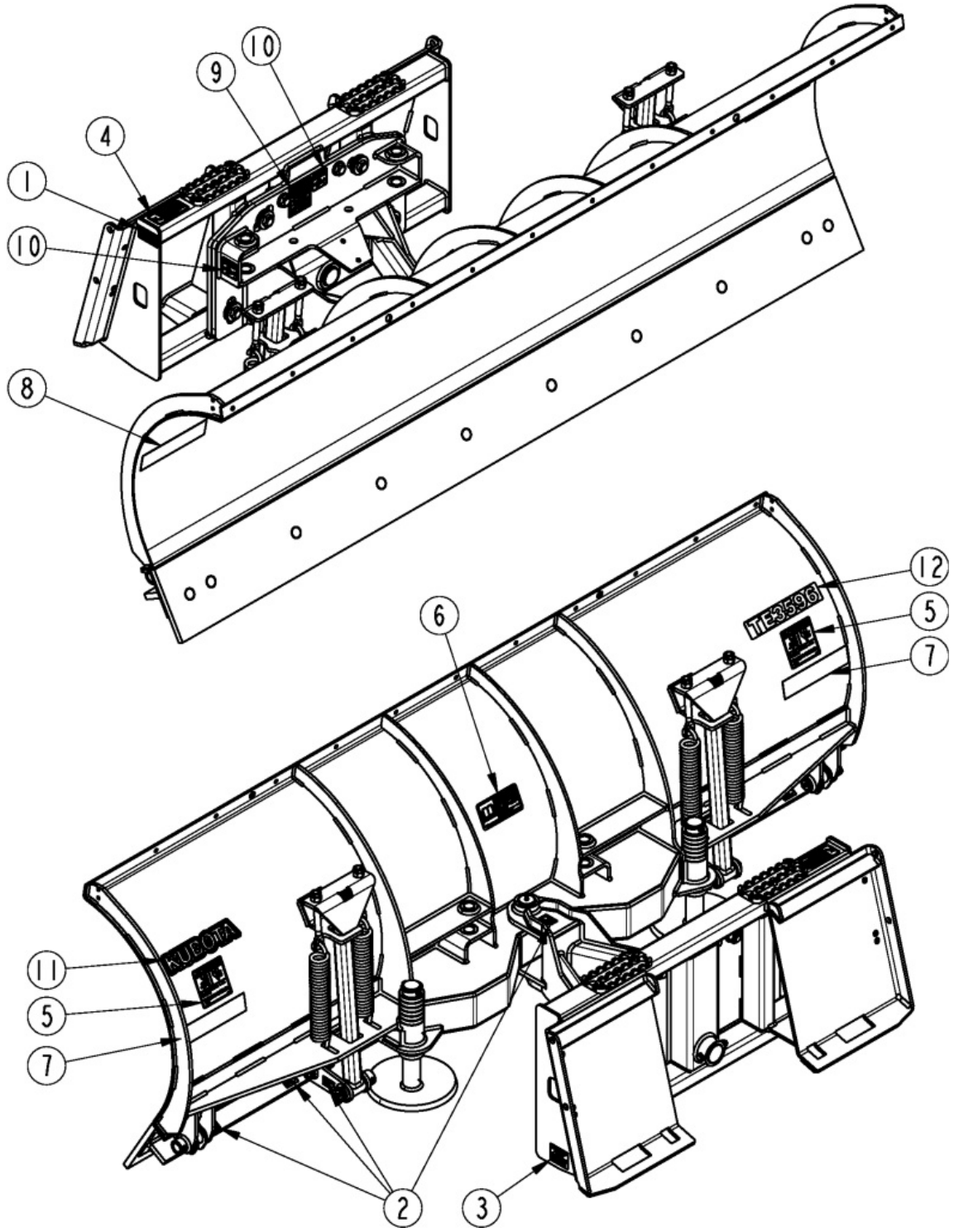

Decal Placement

Applies to Models: AP-TE35108, AP-TE3596

Ref.	Part No.	Part Description	Comments
	DWG 70934	Image No.	
1	N/A	NOT AVAILABLE	
2	818-298C	DECAL GREASE 25HRS BLACK/WHITE	
3	N/A	NOT AVAILABLE	
4	844-363C	DECAL, WARNING FALL/TRIP HZRD	
5	838-112C	DECAL DANGER PINCHING	
6	838-293C	DECAL WARNING READ MANUAL	
7	838-614C	DECAL REFLECTOR RED 2X9	
8	838-615C	DECAL REFLECTOR AMBER 2X9	
9	848-747C	DECAL HIGH PRESSURE FLUIDS	
10	858-148C	DECAL PIC--PINCH POINT	
11	844-221C	DECAL, 10" KUBOTA BLOCK	
11	858-398C	RPBY 844-221C	Obsolete
12	858-919C	DECAL TE3596 WHITE	
12	858-920C	DECAL TE35108 WHITE	

Touch-up Paints - Kubota

Applies to Models: AP-TE35108, AP-TE3596

No diagram associated with this Parts List

Touch-up Paints - Kubota

Applies to Models: AP-TE35108, AP-TE3596

Ref.	Part No.	Part Description	Comments
1	821-070C	PAINT GP GLOSS BLACK SPRAY CAN	Spray can
2	821-070CTU	PAINT GLOSS BLACK TOUCH-UP 4OZ	Touch-up bottle with brush
3	821-070CQT	PAINT GP GLOSS BLACK QUART	Quart can
4	821-070CGL	PAINT GP GLOSS BLACK GALLON	Gallon Can
5	821-006C	ORANGE SPRAY CAN	Spray can
6	821-066CTU	PAINT ORANGE TOUCH-UP 4OZ	Touch-up bottle with brush
7	821-066CQT	PAINT ORANGE QUART	Quart can
8	821-066CGL	PAINT ORANGE GALLON	Gallon Can
9	821-085C	PAINT KBT DARK GRAY SPRAY CAN	Spray can
10	821-085CTU	PAINT KBT DARK GRAY TCH-UP 4OZ	Touch-up bottle with brush

Cutting Edge Poly

Applies to Models: AP-TE35108, AP-TE3596

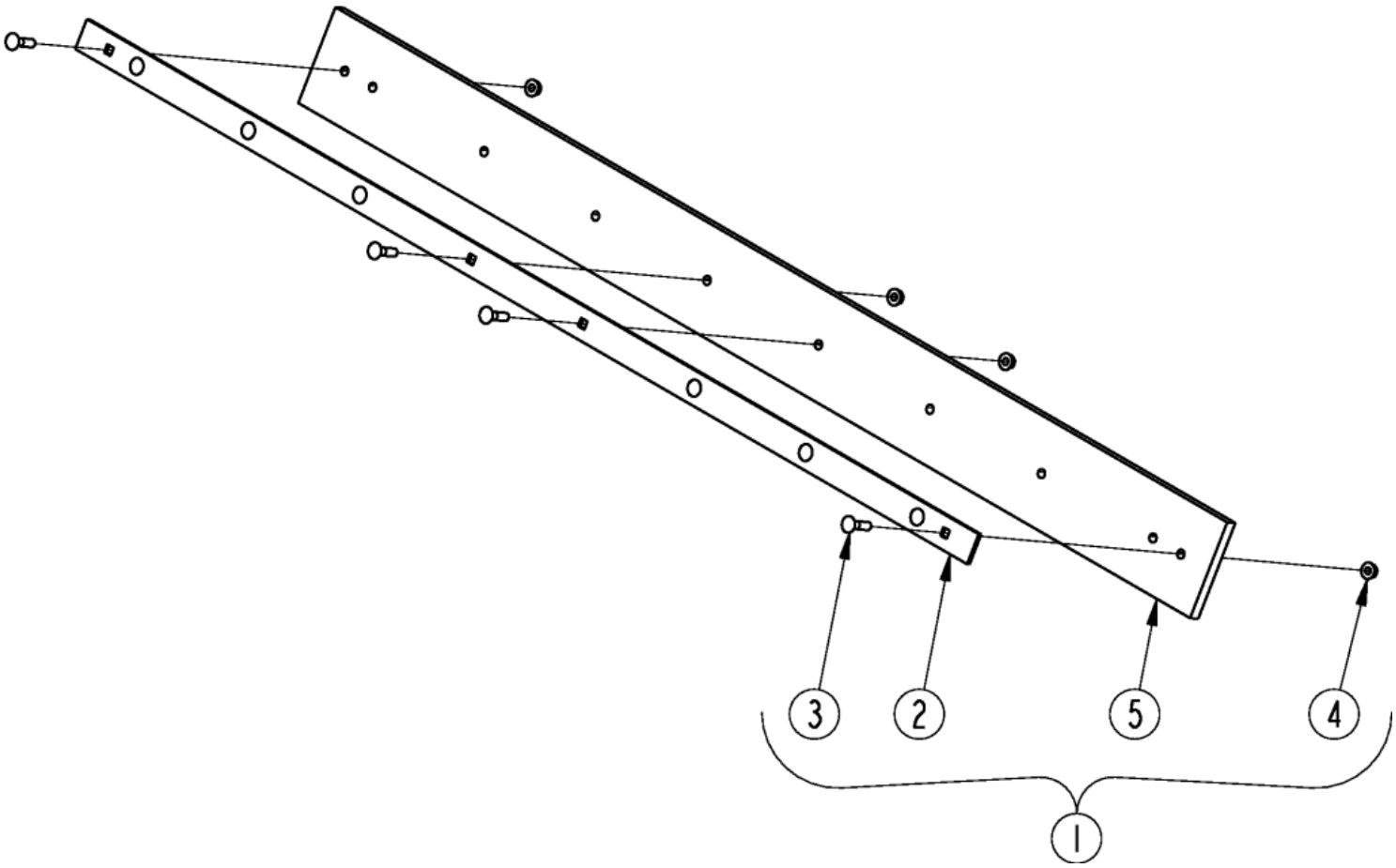

Cutting Edge Poly

Applies to Models: AP-TE35108, AP-TE3596

Ref.	Part No.	Part Description	Comments
	DWG 70935	Image No.	
1	301-605A	POLY CUTTING EDGE ASSY 96	
1	301-606A	POLY CUTTING EDGE ASSY 108	
2	301-739D	POLY BLADE STRAP 96"	
2	301-738D	POLY BLADE STRAP 108"	
3	802-521C	RHSNB 5/8-11X2 1/2 GR5	
4	803-304C	NUT HEX WHIZ 5/8-11 PLT	
5	837-169C	POLY CUTTING EDGE 96"	
5	837-170C	POLY CUTTING EDGE 108"	

Cutting Edge Steel

Applies to Models: AP-TE35108, AP-TE3596

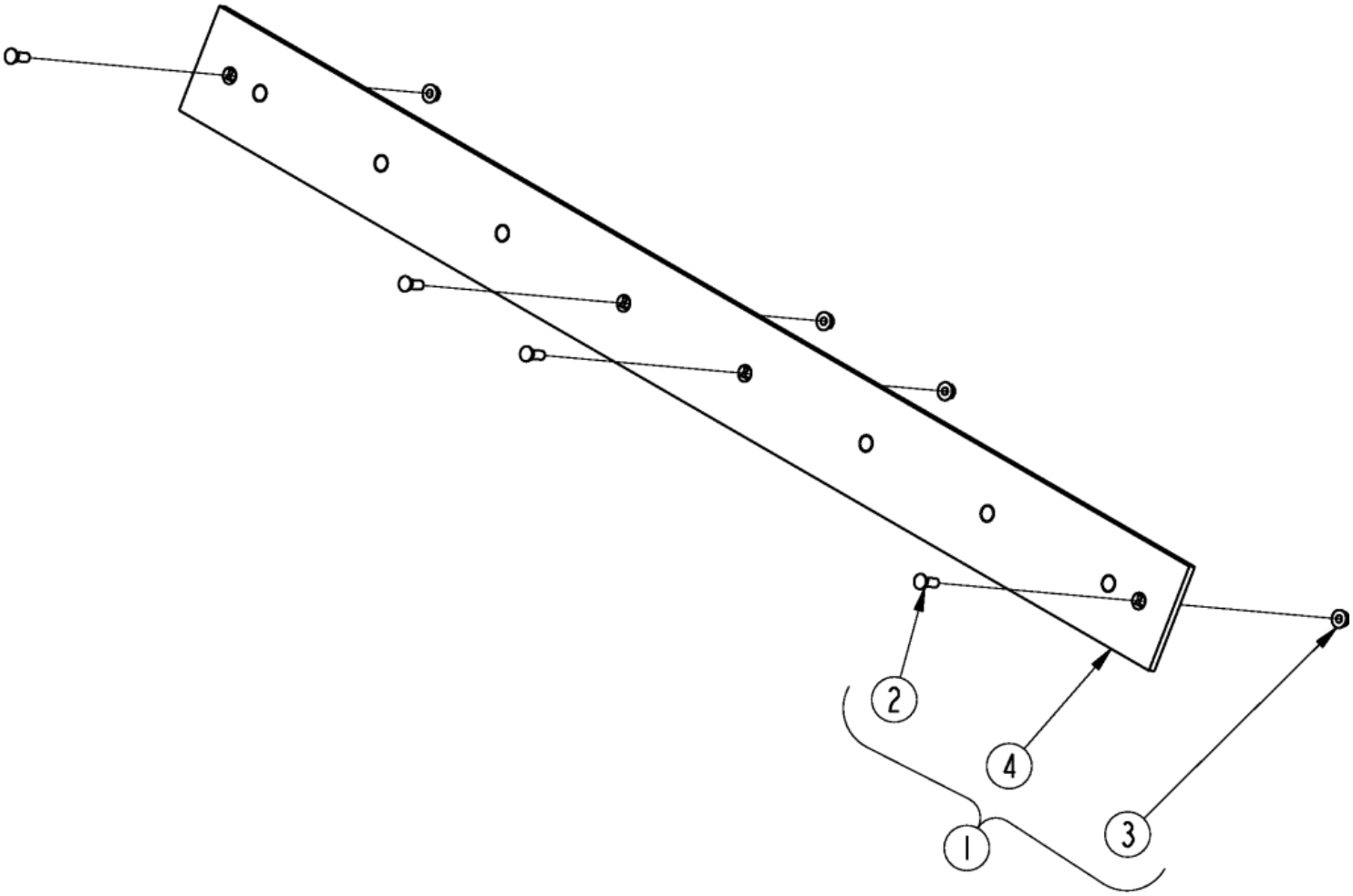

Cutting Edge Steel

Applies to Models: AP-TE35108, AP-TE3596

Ref.	Part No.	Part Description	Comments
	DWG 70936	Image No.	
1	301-603A	STEEL CUTTING EDGE ASSY 96	
1	301-604A	STEEL CUTTING EDGE ASSY 108	
2	802-206C	PLOW 5/8-11X1 3/4 GR5	
3	803-304C	NUT HEX WHIZ 5/8-11 PLT	
4	820-682C	STEEL CUTTING EDGE 5/8X8X96	
4	820-683C	STEEL CUTTING EDGE 5/8X8X108	

Deflector, Top Edge

Applies to Models: AP-TE35108, AP-TE3596

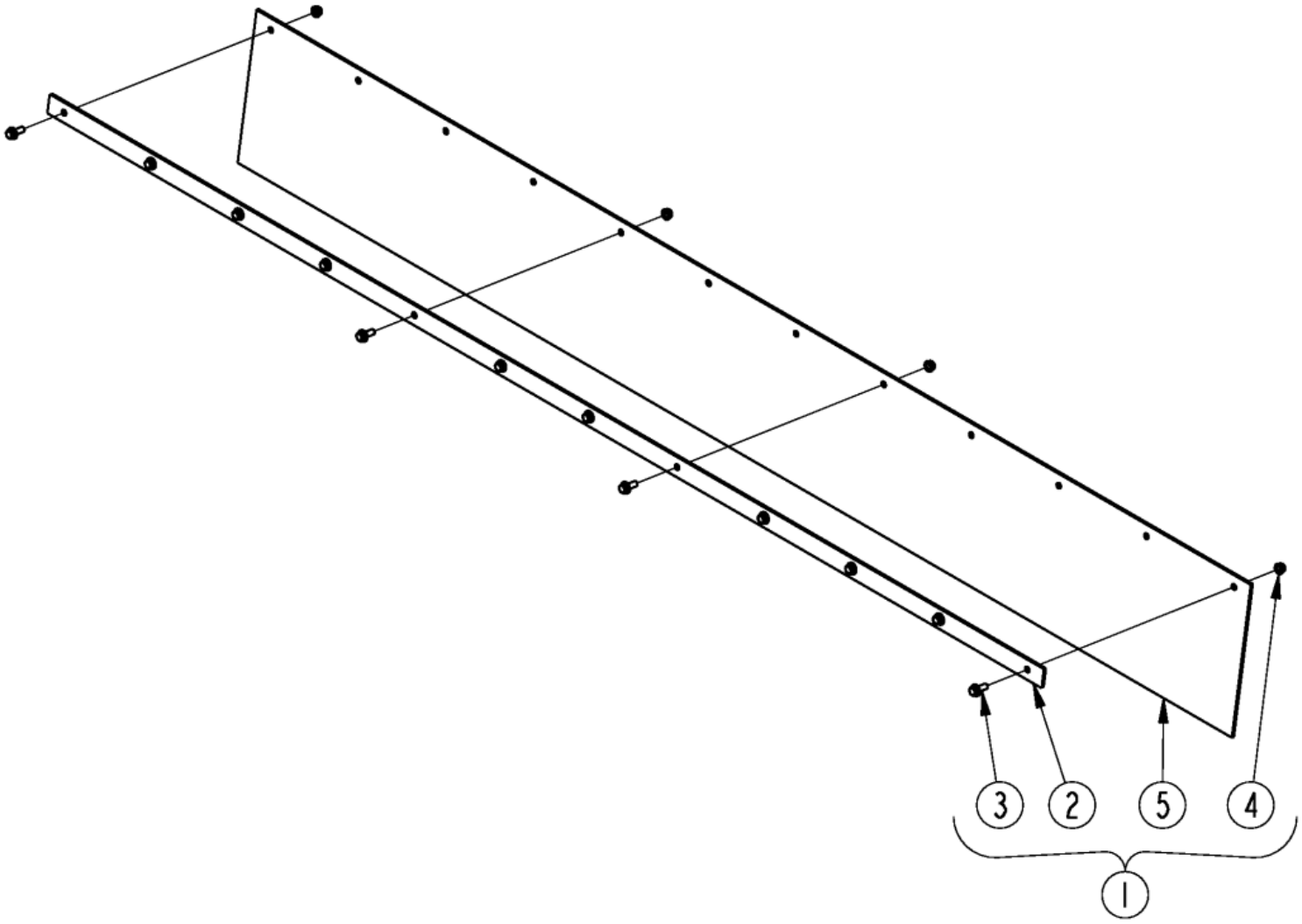

Deflector, Top Edge

Applies to Models: AP-TE35108, AP-TE3596

Ref.	Part No.	Part Description	Comments
	DWG 70937	Image No.	
1	301-607A	TRIP EDGE DEFLECTOR FLAP 96	
1	301-608A	TRIP EDGE DEFLECTOR FLAP 108	
2	301-573D	DEFLECTOR STRAP 96"	
2	301-737D	DEFLECTOR STRAP 108"	
3	802-388C	HFS 3/8-16X1 GR5	
4	803-209C	NUT FLANGE LOCK 3/8-16 PLT	
5	816-912C	TRIP EDGE DEFLECTOR FLAP 96	
5	816-913C	TRIP EDGE DEFLECTOR FLAP 108	

Orange Markers

Applies to Models: AP-TE35108, AP-TE3596

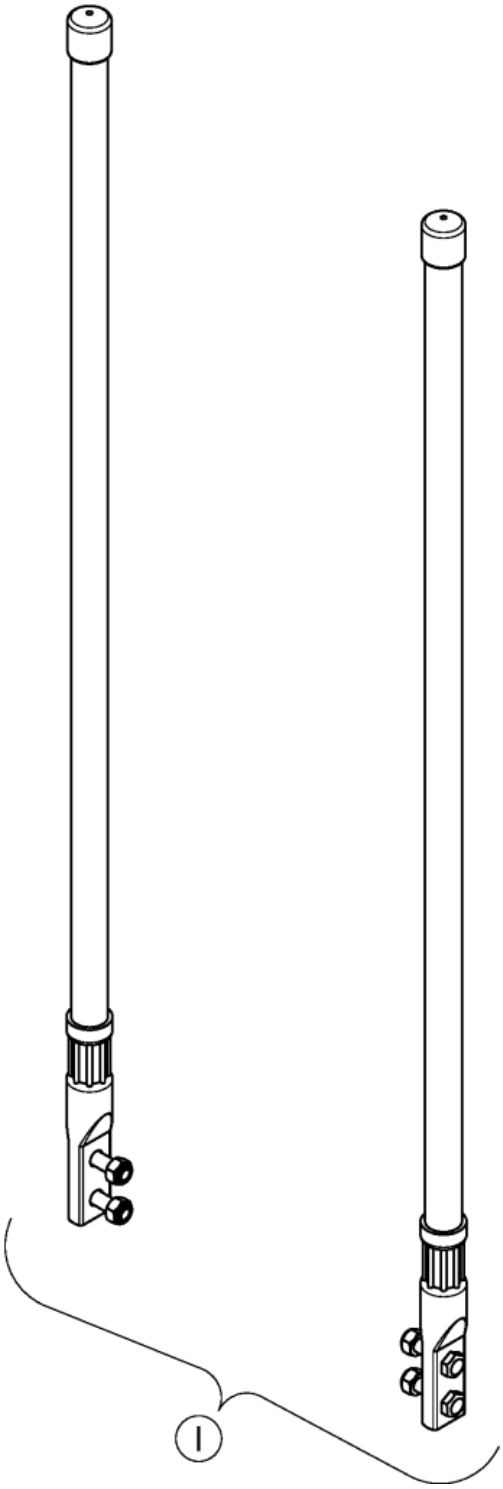

Orange Markers

Applies to Models: AP-TE35108, AP-TE3596

Ref.	Part No.	Part Description	Comments
	DWG 73331	Drawing Image Number	
1	323-026A	CABLE FILLED ORANGE MARKER 30"	

Part Number Index

Part Number	Page
130556	11
138098	11
258818	11
258872	11
301-567H	5
301-568H	5
301-569H	7
301-570H	7
301-573D	21
301-573H	7
301-577H	7
301-596H	7
301-597H	7
301-601D	5
301-602V	7
301-603A	19
301-604A	19
301-605A	17
301-606A	17
301-607A	21
301-608A	21
301-619V	5
301-725D	5
301-737D	21
301-738D	17
301-739D	17
301-780D	7
323-026A	23
498649	11
498650	11
800-001C	5, 7, 9
801-045C	11
802-039C	5
802-041C	5
802-065C	5
802-114C	9
802-206C	19
802-212C	5
802-370C	7
802-388C	21
802-521C	17
803-007C	7
803-014C	9
803-019C	5
803-021C	7
803-023C	7
803-026C	5
803-209C	21
803-304C	17, 19
804-012C	9
804-013C	9

Part Number	Page
804-025C	5
804-029C	9
804-147C	5
805-017C	9
805-341C	7
805-493C	9
807-379C	7
810-385C	9
811-063C	9
811-073C	9
811-088C	9
811-091C	9
811-114C	9
811-150C	9
811-153C	9
811-205C	9
811-778C	9
816-912C	21
816-913C	21
818-298C	13
820-682C	19
820-683C	19
821-006C	15
821-066CGL	15
821-066CQT	15
821-066CTU	15
821-070C	15
821-070CGL	15
821-070CQT	15
821-070CTU	15
821-085C	15
821-085CTU	15
837-169C	17
837-170C	17
838-112C	13
838-293C	13
838-614C	13
838-615C	13
841-776C	9
842-418C	7
844-221C	13
844-363C	13
848-747C	13
850-102C	9, 11
850-191C	11
851-947C	9
851-948C	9
858-148C	13
858-398C	13
858-919C	13
858-920C	13

Part Number	Page
861-237C	9
861-244C	9
DWG 39622	11
DWG 70923	7
DWG 70930	5
DWG 70933	9
DWG 70934	13
DWG 70935	17
DWG 70936	19
DWG 70937	21
DWG 73331	23
M138011	11
N/A	11, 13

This Page Intentionally Left Blank

KUBOTA TRACTOR CORPORATION
1000 Kubota Drive, Grapevine, TX 76051
Telephone: (817) 756-1171

Western Division: 1175 S. Guild Ave., Lodi, CA 95240
Telephone: (209) 334-9910

Midwest Division: 31700 W. 207th ST., Edgerton, KS 66021
Telephone: (913) 215-5915

Central Division: 14855 FAA Blvd., Fort Worth, TX 76155
Telephone: (817) 571-0900

Northern Division: 6300 at One Kubota Way, Groveport, OH 43125
Telephone: (614) 835-1100

Southeast Division: 1025 Northbrook Parkway, Suwanee, GA 30024
Telephone: (770) 995-8855

www.kubota.com