RC5014 & RCM5014 Models

Specifications & Capacities	
Min. horsepower	70 hp
Gearbox horsepower	250 hp Splitter 210 hp Center & wing
Gearbox Lubrication & capacity	Center deck & wing: 10 pints of Gear Lube 80-90W EP Divider Gearbox: 5.5 pints of Gear Lube 80-90W EP
Cutting capacity	Up To 3" Material
Machine weight	7,282 lbs. Approx. (With single row chain guards, 6 airplane tires, dual axle, 540 CV main driveline)
Blade tip speed @ 540 rpm @ 1000 rpm	Center blade: 17,377 FPM & Wing blade: 17,329 FPM Center blade: 18,165 FPM & Wing blade:18,317 FPM
Tongue weight	2300 lbs.
Hitch types	Pull-Type, Self-Leveling Hitch & Clevis
Hitch jack	Standard hand crank
Wing offset	Right wing model with weight box on the left side
Signal lights 7 Pin connector	LED SAE J560 pin configuration
Cutting width Overall width Minimum transport width	13'-6" 14'-7" 8'-9"
Overall length	19'-3"
Deck height	10 1/2"
Cutting height*	2" to 14" High with hydraulic cylinder and stroke control spacers
Lift hydraulics	4" x 8" hydraulic cylinder, hoses, fittings & stroke control spacers
Wing hydraulics	3 1/2" x 12" hydraulic cylinder, hose & fittings
Wing transport protection	Wing transport lock
Deck thickness	3/16"
Side skirt thickness	1/4"
Skid shoes Wing deck Center deck	Reversible & replaceable 2 - Replaceable
Blades - 4 (2 per carrier)	1/2" x 4" Thru-harden free swinging alloy steel with uplift
Blade overlap	6"
Blade bolt	Keyed with hardened flat washer & locknut
Stump jumper / blade holder	3/16" Round bolt-on stump-jumper with 1" diamond shaped blade bar
Deck ring	Optional 1/2" x 3" fully welded
Front & rear guards	Optional rubber, single chain, or double chain
Heavy duty Input driveline options	Conventional u-joint ASAE Category 5 with 1 3/8"-21 spline Constant velocity u-joint ASAE Category 5 with 1 3/8"-21 spline or 1 3/4"-20 spline
Heavy duty connecting drivelines	ASAE Cat. 5 with slip-clutch
Wheel options	6" x 21" Laminated tires or 27" x 7.75" x 15" Used aircraft tires with or without foam filling
Number of wheel	5 - Wheel option: 4 on transport axle and one on wing axle 6 - Wheel option: 4 on transport axle and two on wing axle.
Transport axle	Spring-cushioned on center transport axle
Hubs	Cast iron 5-bolt hubs with tapered roller bearings and with 1 3/4" shafts

* Maximum cut height is dependent on tire options selected.

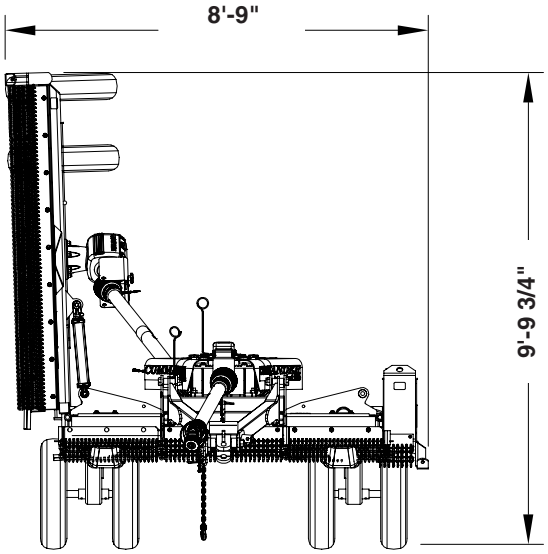

Transport Width With Wing Axle Disconnected At The Turnbuckle And Wheel Folded Back (See Figure 1-8 on page 15)

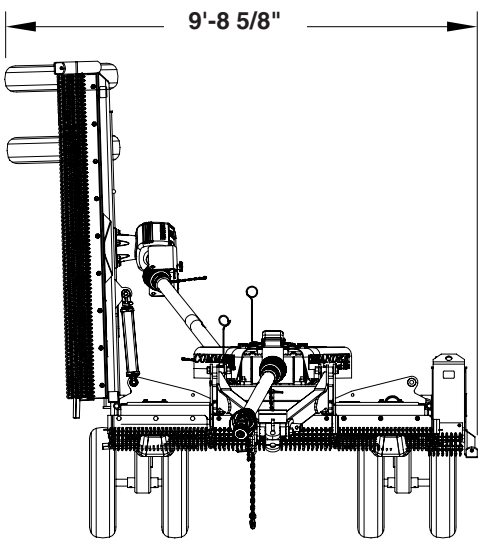

26846

Transport Width With Wing Axle Connected At The Turnbuckle

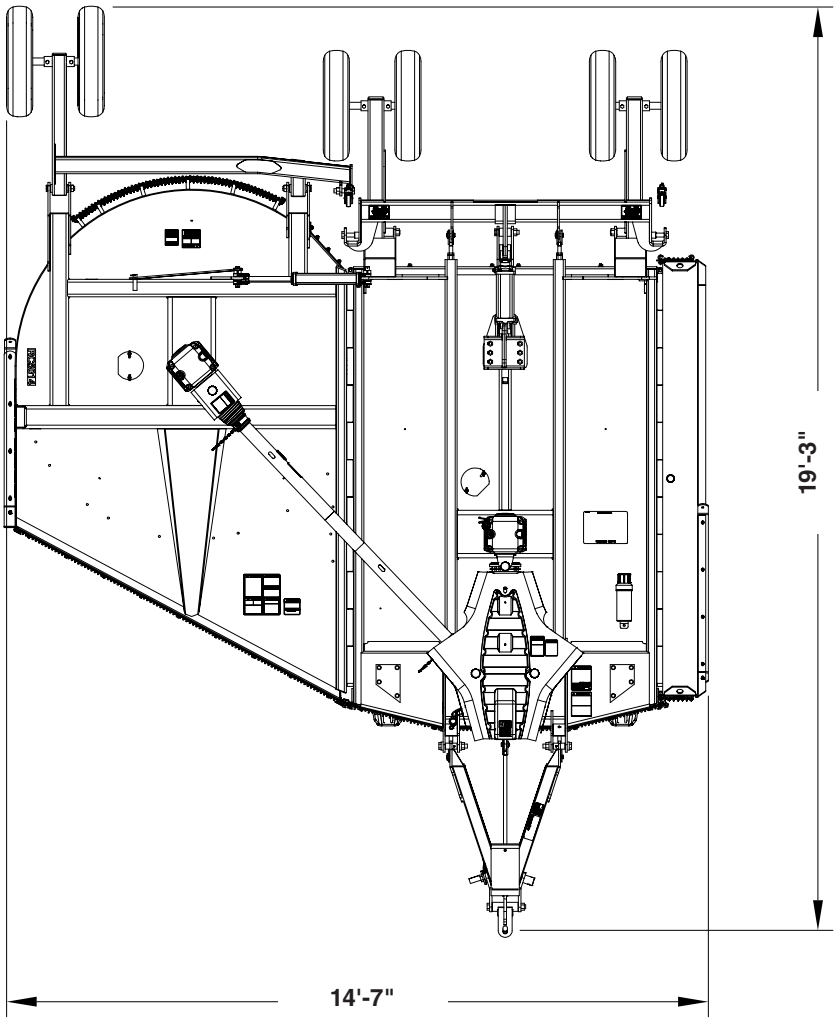

26844