SH35 Series Skid Steer Quick-Hitch

List	Specifications & Capacities
Hitch	Standard Category 1 & II, 3-point with adjustable top hitch
Overall Width	46 7/8”
Height	25”
Length	15 1/2”
Weight	225 lbs.
Lower 3-Point	Automatic Lock
Maximum Lift Capacity	2,800 lbs at 24” from implements’ lower hitch pins.

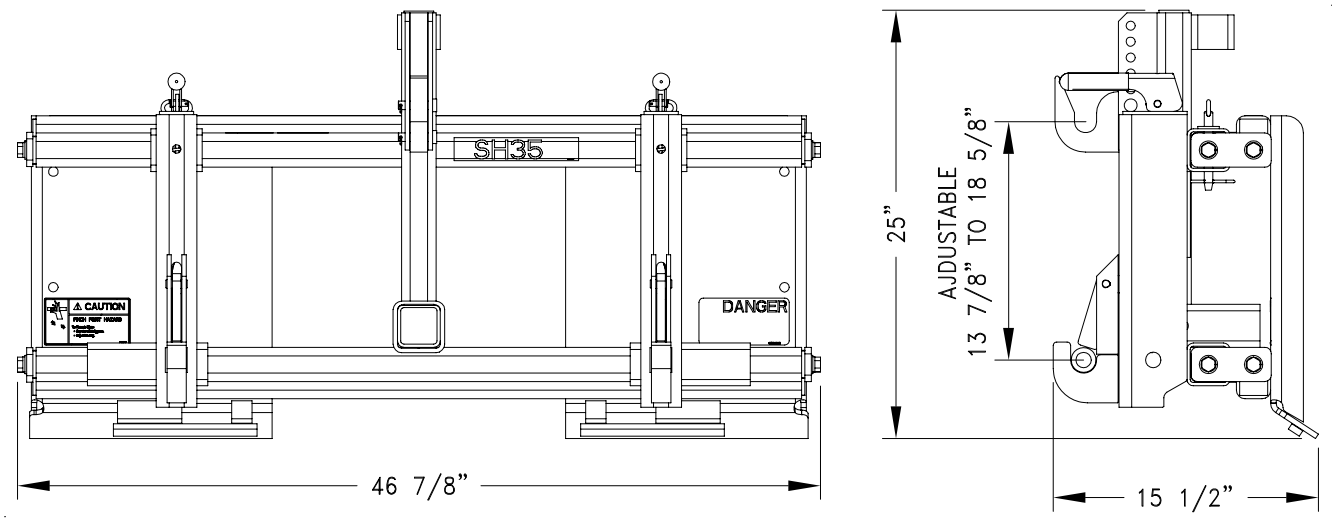

26875