Rotary Cutters

RCB(M)6610 Series 2 (S/N 944730+)

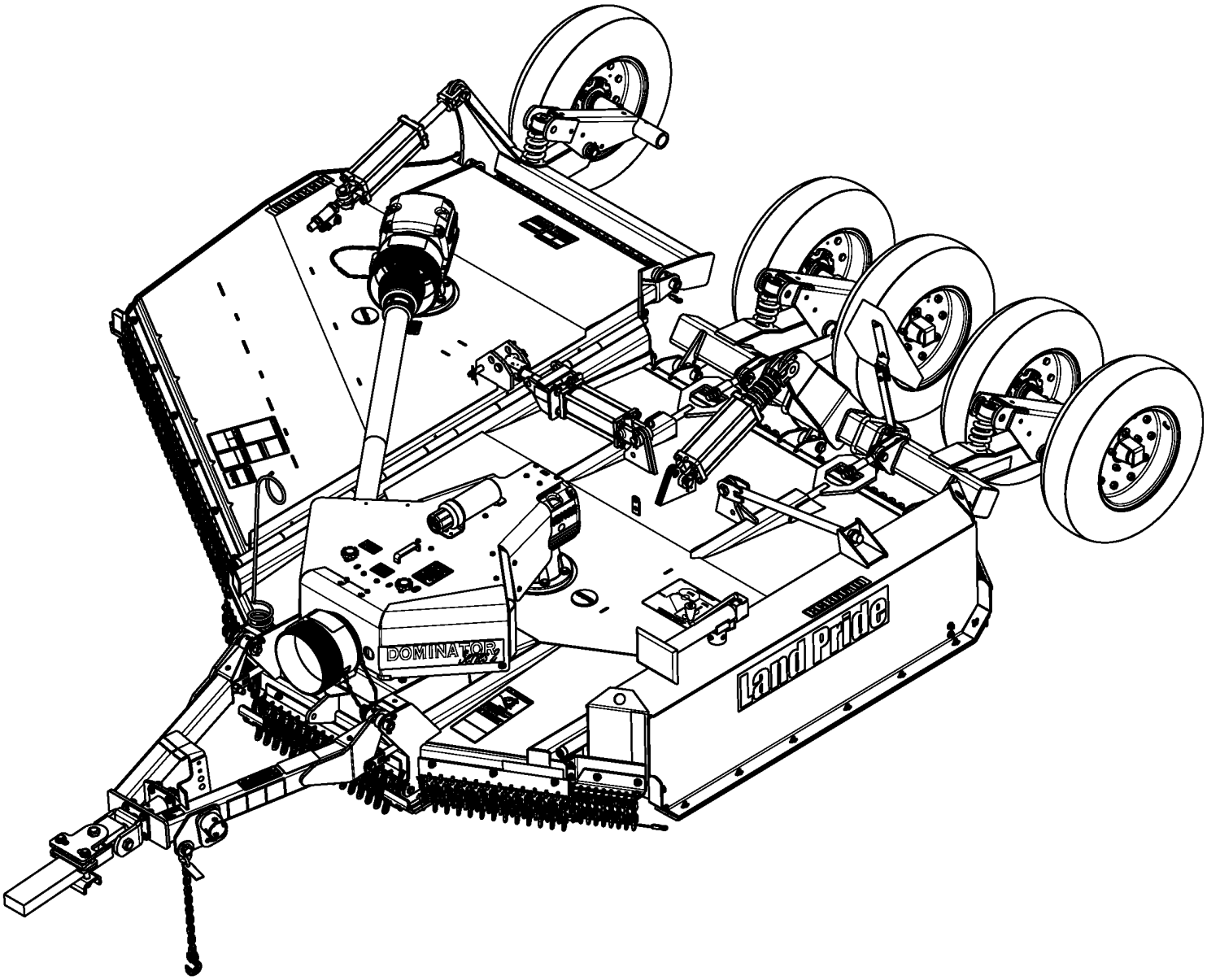

334-071P
Parts Manual

Land Pride

Read the Operator's Manual entirely. When you see this symbol, the subsequent instructions and warnings are serious - follow without exception. Your life and the lives of others depend on it!

© Copyright 2022 Printed 01/05/2023

Cover photo may show optional equipment not supplied with standard unit.

Table Of Contents

Section 1: Introduction **1**
- *Using This Manual* *1*
- *Manual Replacement Information* *1*
- *Manual Revisions* *1*
- *Touch-up Paint* *1*
- *Hardware Legend* *2*
- *Replacement Hardware* *2*
- *Serial Numbers* *2*
- *Part Number Service Coding* *2*

Section 2: Decks & Hitches **3**
- *Blade Carrier (66 Series 2)* *3*
- *Deck Center Components* *5*
- *Deck Center Drive Components* *7*
- *Deck Wing Components* *9*
- *Deck Wing Drive Components* *11*
- *HItch A-Frame* *13*
- *Hitch Ball Coupler* *15*
- *Hitch Bar Tite* *17*
- *Hitch LP Performance S/N 1000385-* *19*
- *Hitch LP Performance S/N 1000386+* *21*
- *Hitch Pintle* *23*
- *Hitch Standard Pivoting Clevis* *25*
- *Leveling Rod (66 Series)* *27*
- *Off Center Lights 3.5 Inch (LED)* *29*
- *Splitter Box Sliding Cover* *31*
- *Weight Box (6610)* *33*

Section 3: Axles **35**
- *Axle Center Standard* *35*
- *Axle Center Tandem S/N 1235290-* *37*
- *Axle Center Tandem S/N 1235291+* *39*
- *Axle Wing Standard* *41*
- *Axle Wing Tandem* *43*
- *HD Hub Kit (337-072K)* *45*
- *HD Hub Kit (337-073K)* *47*
- *HD Hub Kit (337-074K)* *49*
- *HD Hub Kit (337-075K)* *51*
- *Hub Assembly (330-938K)* *53*
- *SMV* *55*

Section 4: Guards **57**
- *Guards Chain Double Row Front* *57*
- *Guards Chain Double Row Rear* *59*
- *Guards Chain Single Row Front* *61*
- *Guards Chain Single Row Rear* *63*
- *Guards Chain W/ Cable Front* *65*
- *Guards Chain W/ Cable Rear* *67*
- *Guards Rubber Front* *69*
- *Guards Rubber Rear* *71*

Section 5: Drivelines **73**
- *Driveline (826-112C) Walterscheid* *73*
- *Driveline (826-247C) Walterscheid* *75*
- *Driveline (826-643C) Weasler* *77*
- *Driveline (826-644C) Weasler* *79*
- *Driveline (826-645C) Weasler* *81*
- *Driveline (826-793C) Weasler* *83*
- *Driveline (826-812C) Comer* *85*
- *Driveline (826-818C) Comer* *87*

Section 6: Gearboxes **89**
- *Gearbox (826-322C) Comer* *89*
- *Gearbox (826-324C) Comer* *91*
- *Gearbox (826-729C)* *93*
- *Gearbox (826-730C)* *95*
- *Gearbox (826-731C)* *97*
- *Gearbox (826-732C)* *99*
- *Gearbox Divider (826-520C) Comer* *101*
- *Gearbox Divider (826-520C) ITG* *103*
- *Gearbox Divider (826-521C) Comer* *105*
- *Gearbox Divider (826-521C) ITG* *107*

Section 7: Hydraulics **109**
- *Hydraulic Cylinder (810-671C) Red Lion* *109*
- *Hydraulic Cylinder (810-830C) Red Lion* *111*
- *Hydraulic Cylinder (810-831C) Red Lion* *113*
- *Hydraulic Cylinders & Components* *115*
- *Hydraulic Plumbing Components* *117*

Section 8: Decals **119**
- *Decals* *119*
- *Touch-up Paints - LP* *121*

Section 9: Options & Accessories **123**
- *Manual Winch Wing Deck* *123*
- *Off Center Lights 3.5 Inch (LED) Retro-Fit* *125*
- *Tire Options* *127*

General Information

Using This Manual

This manual is divided into sections. The first section contains General Information. The remaining sections divide the machine into segments (i.e. Frames, Drives, Hydraulics, etc.) which illustrate and list all parts. A Parts Number Index is located at the back of the book.

The Land Pride parts in this manual are specially designed for this machine and should be replaced with Land Pride parts only.

The information in this manual is current at time of printing. Some parts may change to assure top performance.

Right-hand and left-hand as used in this manual are determined by facing the direction the machine will travel while in use.

Below is an example of two facing pages from a parts manual. Familiarize yourself with the type of information contained on these pages.

Manual Replacement Information

Replacement manuals are available. Refer to our website at www.landpride.com or e-mail us at lit@landpride.com for additional information. Our website continues to provide the most up-to-date manuals available.

Touch-up Paint

Repaint parts where paint is worn or scratched to prevent rust. Aerosol cans and touch-up bottles with brush applicator are available through your local dealer. Also available are quart and gallon size paints. Add QT or GL to end of the Aerosol P/N.

Land Pride color descriptions and part numbers are listed on the "Land Pride Touch-Up Paints" page in the "Decals" section of this book.

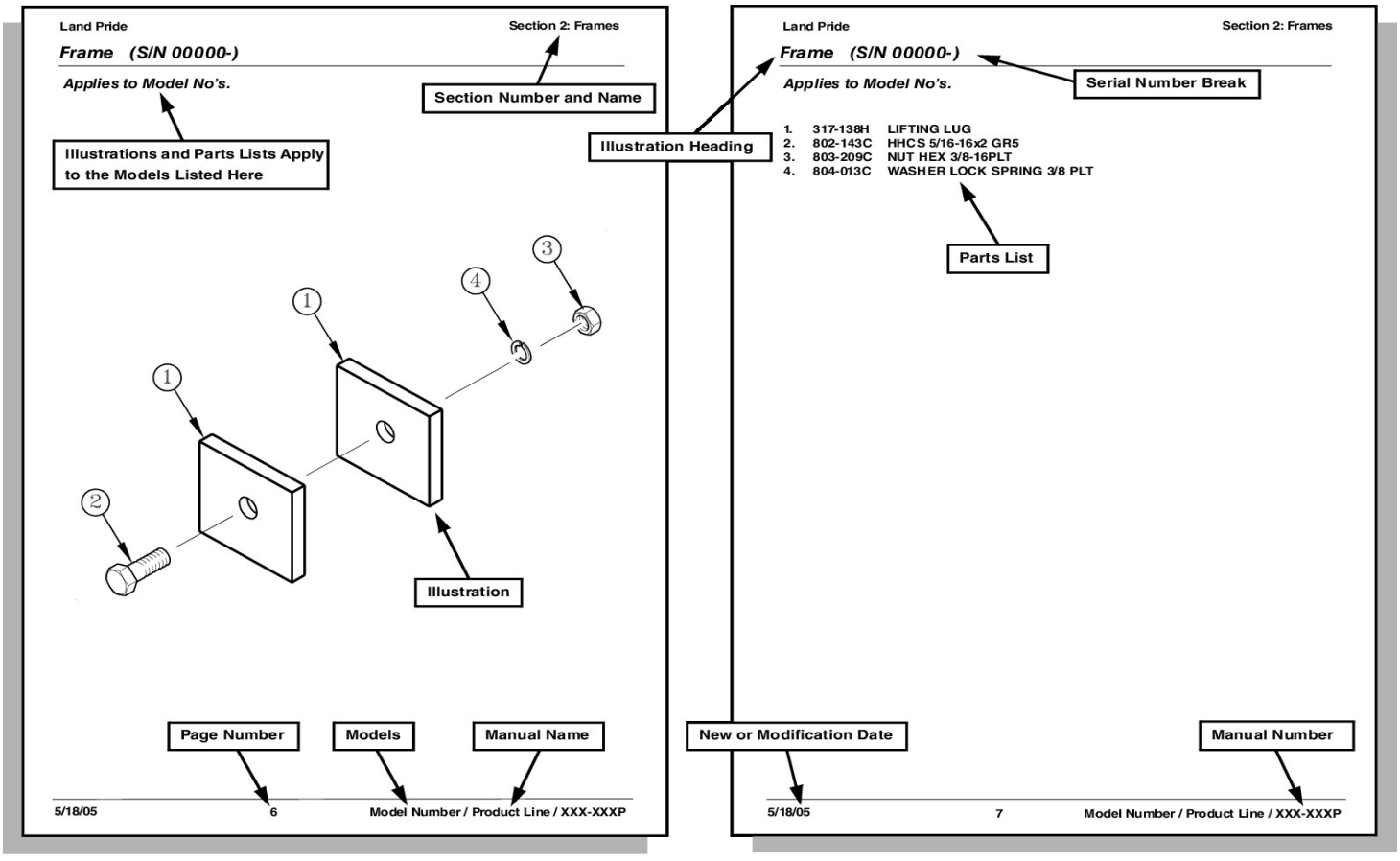

© Copyright 2022. All rights Reserved

Land Pride provides this publication "as is" without warranty of any kind, either expressed or implied. While every precaution has been taken in the preparation of this manual, Land Pride assumes no responsibility for errors or omissions. Neither is any liability assumed for damages resulting from the use of the information contained herein. Land Pride reserves the right to revise and improve its products as it sees fit. This publication describes the state of this product at the time of its publication, and may not reflect the product in the future. The illustrations in this manual are not intended for safe and proper assembly or disassembly of equipment. The illustrations are intended for ordering parts only.

Land Pride is a registered trademark.

All other brands and product names are trademarks or registered trademarks of their respective holders.

Printed in the United States of America.

Hardware Legend

AR	As Required
BLADE	Blade Bolt
C	Cap Screw
CP	Cotter Pin
CPHSSS	Cup Point Hex Socket Set Screw
CPSHSS	Cup Point Square Head Set Screw
CPSQHSS	Cup Point Square Head Set Screw
CRFCHMS3	Cross Recess Flat Countersunk Head Machine Screw
CRPHMS	Cross Recess Pan Head Machine Screw
CRPHTFS	Cross Recess Pan Head Thread Forming
CRRHMS	Cross Recess Round Head Machine Screw
CRTHMS	Cross Recess Truss Head Machine Screw
CSNB	Countersunk Square Neck Bolt
FHMS	Flat Head Machine Screw
FTC	Full Thread Cap Screw
H	Hex Nut
HCLN	Hex Center Lock Nut
HFLCS	Hex Flange Lock Cap Screw
HFS	Hex Flange Screw
HFSLN	Hex Flange Serrated Lock Nut
HFSS	Hex Flange Serrated Screw
HHCS	Hex Head Cap Screw or Metric Bolt
HSBHCS	Hex Socket Button Head Cap Screw
HSFCHCS	Hex Socket Flat Countersunk Head Cap Screw
HSHCS	Hex Socket Head Cap Screw
HSSS	Hex Socket Head Screw
HTLN	Hex Top Lock Nut
HWHCS	Hex Washer Head Cap Screw
HWHMS	Hex Washer Head Machine Screw
HXBHCS	Hex Socket Button Head Cap Screw
J	Hex Jam Nut
JIC	37 Degree Tapered Thread
L	Helical Spring Lock Washer
LUG	Lug Bolt
NFC	National Fine Cap Screw
NPSM	National Pipe Straight Mechanical
NPTF	National Pipe Taper Fuel
P	Wide Plain Washer
PHMS	Pan Head Machine Screw
PLOW	Plow Bolt
RHMS	Round Head Machine Screw
RHSNB	Round Head Square Neck Bolt
SCREW LEVELING	Leveling Screw
SCREW THUMB	Thumb Screw
SCREW WELD	Weld Screw
SFCHMS	Slotted Flat Countersunk Head Machine Screw
SFHMS	Slotted Fillister Head Machine Screw
SP	Special
SP SCREW	Special Screw
SQHSS	Square Head Set Screw
SRHMS	Slotted Round Head Machine Screw
SSS	Socket Set Screw
STCS	Self Tapping Cap Screw
STHMS	Slotted Truss Head Machine Screw
WHEEL	Wheel Studs and Hub Long Bolts
WING	Wing Bolt

Replacement Hardware

The **Hardware Legend** above lists hardware abbreviations used in the parts list. All bolts and nuts are Grade 5 unless otherwise noted. The use of improper grades of hardware can result in personal injury, damage to equipment, or loss of property.

Colored Replacement Parts

Land Pride offers replacement parts in factory standard colors and also on select models in Green, Orange, Red and Blue. Because of the variety of colors available, special attention must be given to the part number to prevent ordering the wrong replacement part.

A suffix number corresponding to one of the colors below must be added at the end of Land Pride's part number when ordering a replacement part with that color.

81 . . . . . Green **83 . . . . .Red**
82 . . . . . Orange **84 . . . . .Blue**

For example, if you are ordering a replacement part with part number 555-555C and the part you need is red, then add the suffix 83 to the end of the number to make the part number read 555-555C83. Parts ordered without a suffix number will be supplied in factory standard colors.

Black Replacement Parts

Some parts are factory standard black and some must be special ordered black. If your part is special ordered black, a second part number with the additional suffix number 85 on the end will be available. In this situation you must order that part with the suffix number for it to be black. Parts that are factory standard black will not have the suffix number.

Part Number Service Coding

Within the parts list some part numbers are coded for revisions and interchangeability. See notations in revision column.

Serial Numbers

Always use the serial and model number when ordering parts. Refer to the Operator's Manual for serial number plate location.

(S/N 20001+)	Includes serial numbers 20001 and above (to the latest number)
(S/N 10001 to 20000)	Includes serial numbers between and including 10001 and 20000
(S/N 10000-)	Includes serial numbers 10000 and below (to the earliest number)

Blade Carrier (66 Series 2)

Applies to Models: RCBM6610 SERIES 2 S/N 944730+, RCB6610 SERIES 2 S/N 944730+

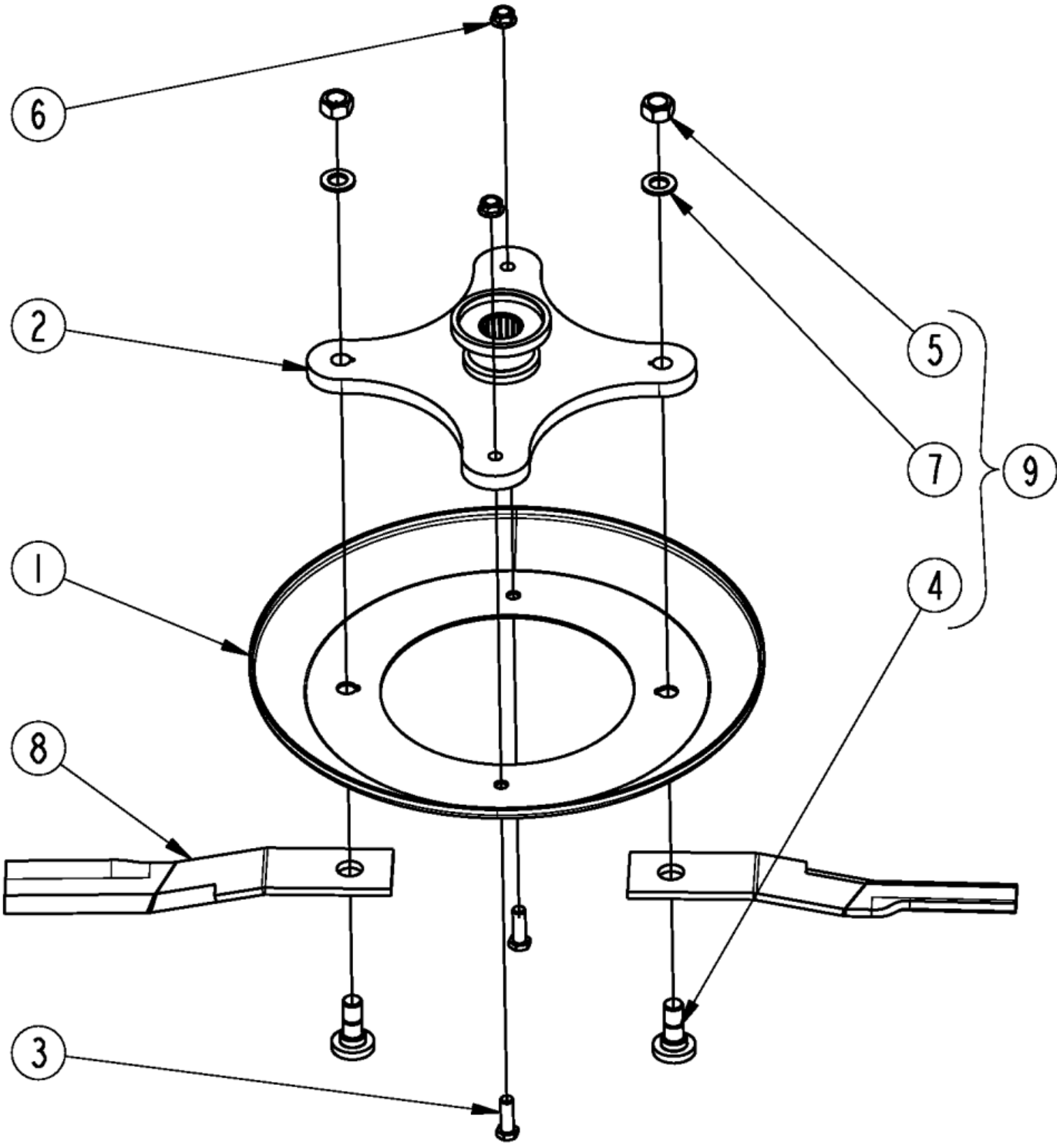

Blade Carrier (66 Series 2)

Applies to Models: RCBM6610 SERIES 2 S/N 944730+, RCB6610 SERIES 2 S/N 944730+

Ref.	Part No.	Part Description	Comments
	DWG 37983	Image No.	
1	318-190D	LARGE ROUND DISHPAN 3/16	
2	318-766H	BLD PLT DSHPN WMT 19C/C	
3	802-065C	HHCS 3/4-10X2 1/4 GR5	
4	802-277C	BLD BLT 1 1/8-12X3.44 W/.25KEY	
5	803-170C	NUT HEX TOP LOCK 1 1/8-12 PLT	
6	803-181C	NUT HEX FLANGE LOCK 3/4-10 PLT	
7	804-147C	WASHER FLAT 1" HARDENED	
8	820-169C	CUTTER BLADE 1/2X4X23 CCW	Right wing section (Standard)
8	820-479C	CUTTER BLADE 1/2X4X23 CCW LL	Right wing section (Low lift) --- Good for tall weeds and brush
8	820-170C	CUTTER BLADE 1/2X4X23 CW	Right Wing Section (Special rotation)
8	820-724C	CUTTER BLADE 1/2X4X23 CCW HL	Right wing section (High lift) --- Good for grass cutting. Not intended for high exposure to brush and tree cutting, contact with ground or animal mounds and standing water.
8	820-727C	CUTTER BLADE 1/2X4X29 CW HL	Right wing section (High lift) (Special rotation) --- Good for grass cutting. Not intended for high exposure to brush and tree cutting, contact with ground or animal mounds and standing water.
8	820-168C	CUTTER BLADE 1/2X4X29 CCW	Right wing section (Standard)
8	820-478C	CUTTER BLADE 1/2X4X29 CCW LL	Right wing section (Low lift) --- Good for tall weeds and brush
8	820-249C	CUTTER BLADE 1/2X4X29 CW	Right Wing Section (Special rotation)
8	820-725C	CUTTER BLADE 1/2X4X29 CCW HL	Center section (High lift) --- Good for grass cutting. Not intended for high exposure to brush and tree cutting, contact with ground or animal mounds and standing water.
8	820-726C	CUTTER BLADE 1/2X4X23 CW HL	Center section (High lift) (Special rotation) --- Good for grass cutting. Not intended for high exposure to brush and tree cutting, contact with ground or animal mounds and standing water.
9	318-586A	BLADE BOLT KIT	

Deck Center Components

Applies to Models: RCBM6610 SERIES 2 S/N 944730+, RCB6610 SERIES 2 S/N 944730+

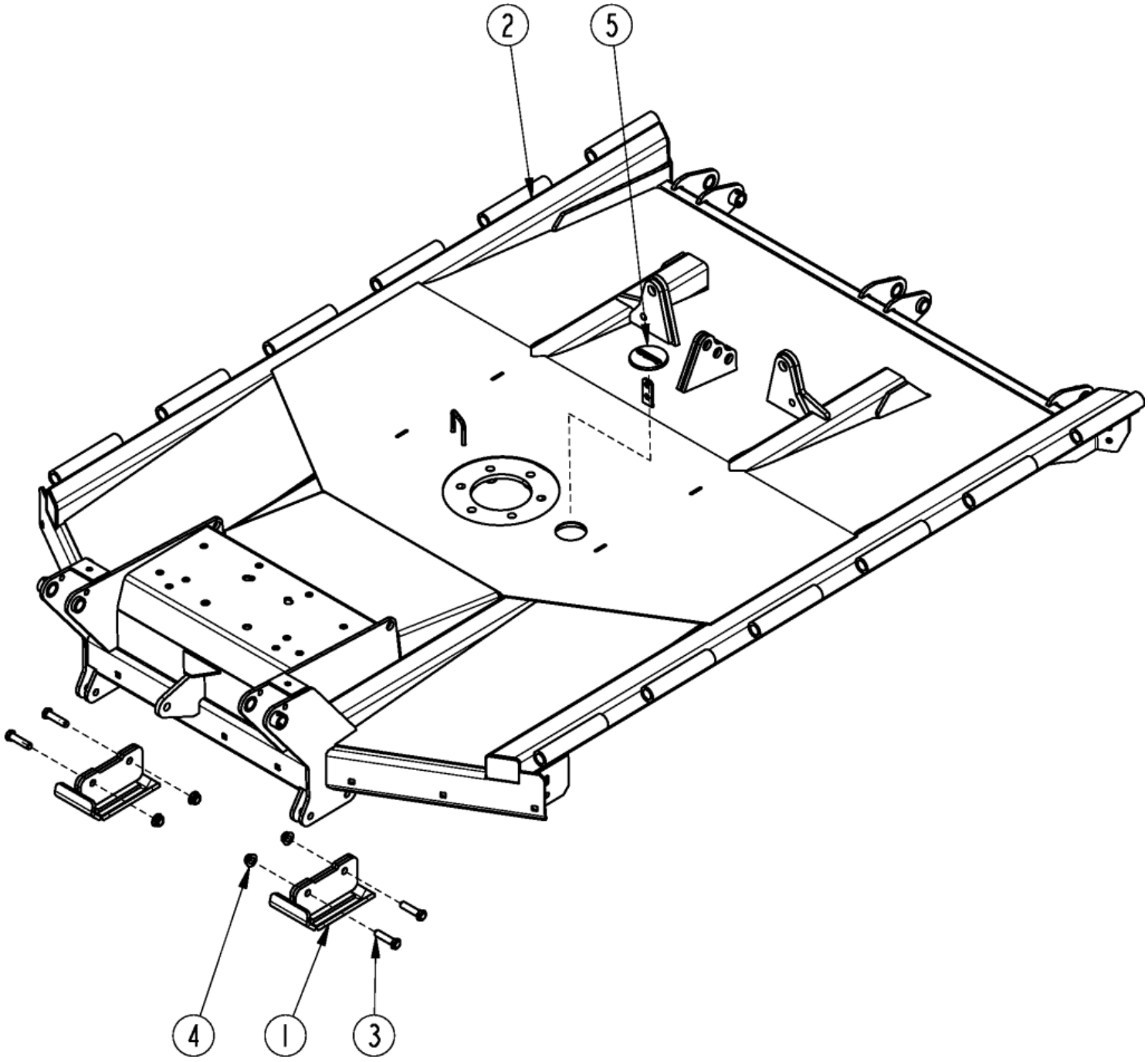

Deck Center Components

Applies to Models: RCBM6610 SERIES 2 S/N 944730+, RCB6610 SERIES 2 S/N 944730+

Ref.	Part No.	Part Description	Comments
	DWG 37968	Image No.	
1	330-185H	SKID SHOE	
2	330-186H	DECK, SMOOTH CENTER WO/DR	Without Deck Ring
2	330-186H81	DECK, CENTER WO/DR GREEN	GREEN
2	330-186H82	DECK, CENTER WO/DR ORANGE	ORANGE
2	330-186H83	DECK, CENTER WO/DR RED	RED
2	330-186H86	DECK, SMOOTH CNTR WO/DR YELLOW	YELLOW
2	330-189H	DECK, SMOOTH CENTER W/DR	With Deck Ring
2	330-189H81	DECK, CENTER W/DR GREEN	GREEN
2	330-189H82	DECK, CENTER W/DR ORANGE	ORANGE
2	330-189H83	DECK, CENTER W/DR RED	RED
2	330-189H86	DECK, SMOOTH CNTR W/DR YELLOW	YELLOW
3	802-058C	HHCS 5/8-11X2 1/2 GR5	
4	803-263C	NUT HEX FLANGE LOCK 5/8-11 PLT	
5	840-273C	PLUG LP 3" ID RUBBER	

Deck Center Drive Components

Applies to Models: RCBM6610 SERIES 2 S/N 944730+, RCB6610 SERIES 2 S/N 944730+

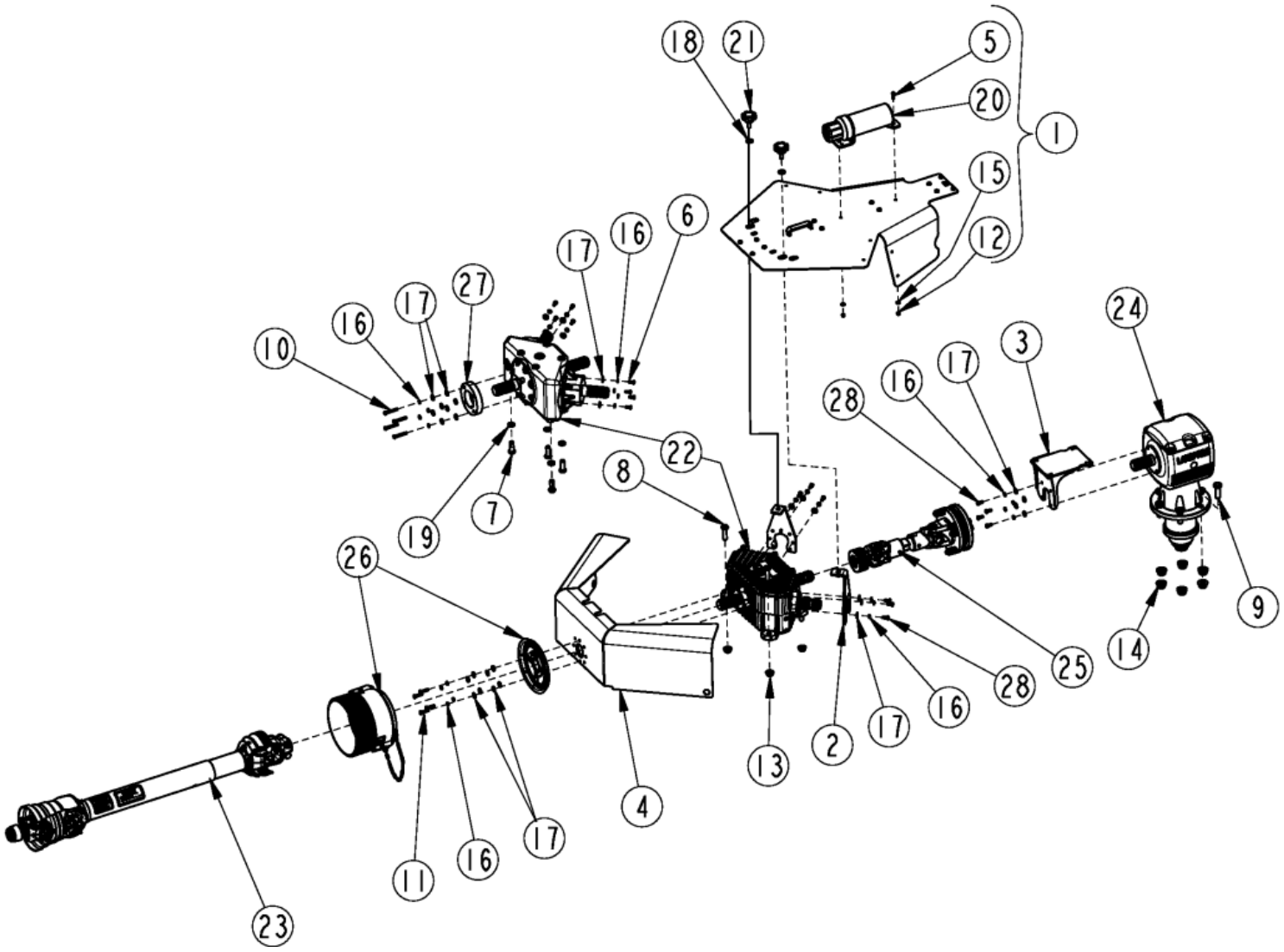

Deck Center Drive Components

Applies to Models: RCBM6610 SERIES 2 S/N 944730+, RCB6610 SERIES 2 S/N 944730+

Ref.	Part No.	Part Description	Comments
	DWG 37967	Image No.	
1	318-920S	MANUAL STORAGE CONTAINER KIT	
2	331-581H	TALL SLIDING SHIELD SPLTR MNT	
3	331-554H	SLIDING SHIELD GB MNT, 50/60GB	
4	331-580H	TALL FRONT FIXED SHIELD	
5	802-005C	HHCS 1/4-20X1 GR5	
6	802-007C	HHCS 5/16-18X3/4 GR5	
7	802-053C	HHCS 5/8-11X1 3/4 GR5 FTHD	
8	802-057C	HHCS 5/8-11X2 1/4 GR5	
9	802-065C	HHCS 3/4-10X2 1/4 GR5	
10	802-138C	HHCS 5/16-18X2 1/4 GR5	
11	802-967C	HHCS M8X1.25X35 GR8.8	
12	803-255C	NUT HEX NYLOCK 1/4-20	
13	803-263C	NUT HEX FLANGE LOCK 5/8-11 PLT	
14	803-299C	NUT HEX FLG TOP LK 3/4-10 PLT	
15	804-007C	WASHER FLAT 1/4 SAE PLT	
16	804-009C	WASHER LOCK SPRING 5/16 PLT	
17	804-010C	WASHER FLAT 5/16 USS PLT	
18	804-016C	WASHER FLAT 1/2 SAE PLT	
19	804-022C	WASHER LOCK SPRING 5/8 PLT	
20	816-481C	MANUAL STORAGE CONTAINER	
21	817-455C	KNOB 1/2-13 MALE THD 2 3/8OD	
22	826-520C	DIV BOX 540RPM 1 3/4-20	Comer & ITG 540 RPM
22	826-521C	DIV BOX 1000RPM 1 3/4-20	Comer & ITG 1000 RPM
23	826-643C	DRVLN C6 42 1.38-6 CV	540 RPM constant velocity
23	826-112C	DRVLN C5 40 1.38-6 QD	540 RPM conventional
23	826-247C	DRVLN C5 44 1.38-21 QD	1000 RPM conventional
23	826-644C	DRVLN C6 42 1.38-21 CV	1000 RPM constant velocity
23	826-645C	DRVLN C6 47 1.75-20 CV	1000 RPM constant velocity
23	826-793C	DRVLN C6 39 1.38-21 CV ORCLTCH	1000 RPM over running clutch
24	826-729C	GBOX RC60 1:1.60 STD	540 RPM
24	826-730C	GBOX RC60 1:1.60 REV	reverse gearbox 540 RPM
24	826-731C	GBOX RC60 1.15:1 STD	(Obsolete) 1000 RPM
24	826-732C	GBOX RC60 1.15:1 REV	(Obsolete) reverse gearbox 1000 RPM
25	826-818C	DRVLN C5 11 1.75-20 FX CLTCH	
26	837-066C	DRVLN SHLD CONE,2 PIECE 8.25L	
26	837-079C	DRVLN SHLD CONE,2 PIECE 11.25L	Used only with driveline 826-793C
27	837-076C	SHIELD SPACER	
28	842-243C	HHCS M8X1.25X20 GR8.8 THD-LCK	

Deck Wing Components

Applies to Models: RCBM6610 SERIES 2 S/N 944730+, RCB6610 SERIES 2 S/N 944730+

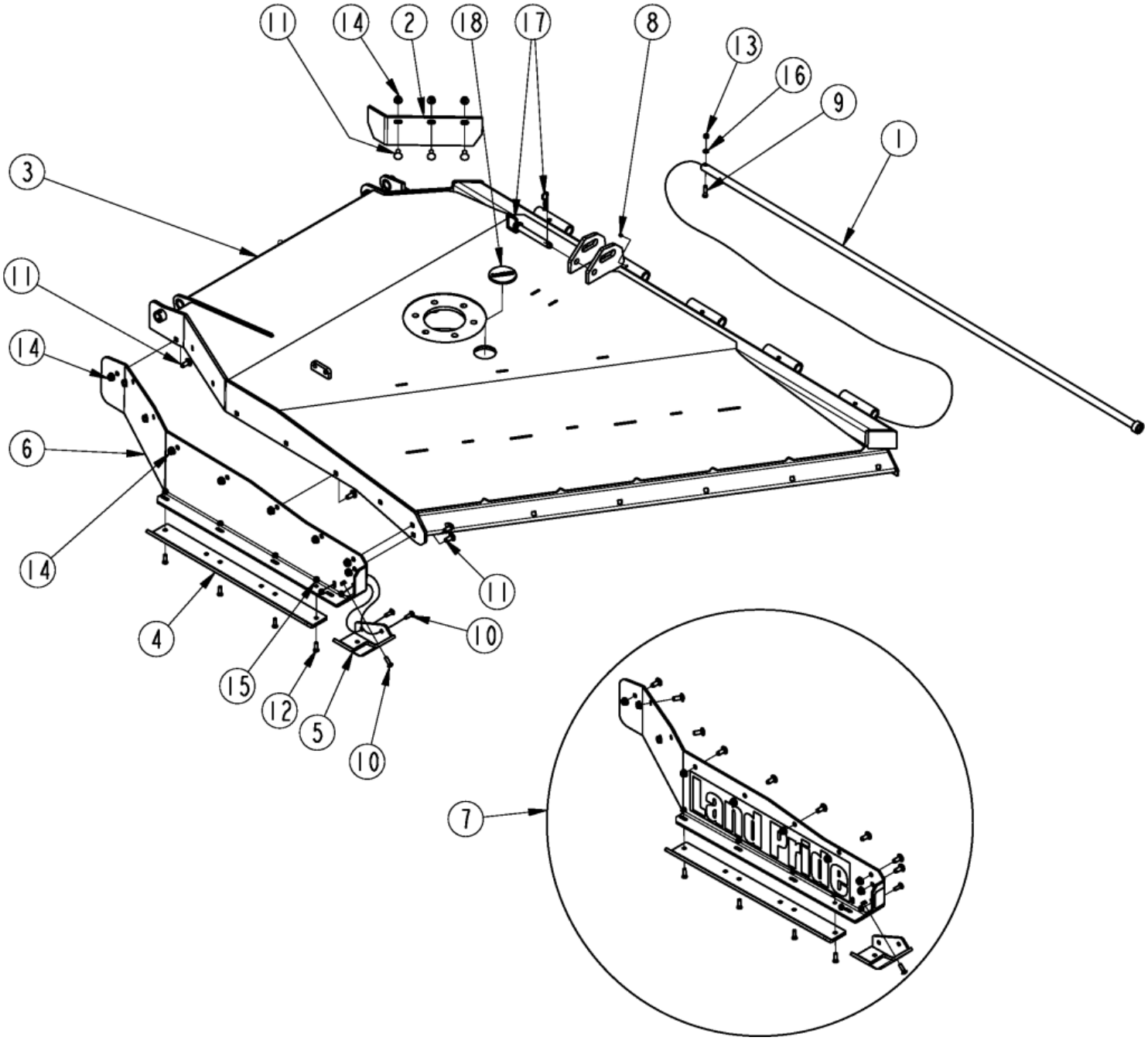

Deck Wing Components

Applies to Models: RCBM6610 SERIES 2 S/N 944730+, RCB6610 SERIES 2 S/N 944730+

Ref.	Part No.	Part Description	Comments
	DWG 37970	Image No.	
1	318-696H	WLDMT. HINGE ROD	
2	318-927D	DEFLECTOR RH	
3	331-204H	DECK, RCB RH WING WO/DR	Without Deck Ring
3	331-204H81	DECK, RCB RH WING WO/DR GREEN	GREEN
3	331-204H82	DECK, RCB RH WING WO/DR ORANGE	ORANGE
3	331-204H83	DECK, RCB RH WING WO/DR RED	RED
3	331-204H86	DECK, RCB RH WING WO/DR YELLOW	YELLOW
3	331-203H	DECK, RCB RH WING W/DR	With Deck Ring
3	331-203H81	DECK, RCB RH WING W/DR GREEN	GREEN
3	331-203H82	DECK, RCB RH WING W/DR ORANGE	ORANGE
3	331-203H83	DECK, RCB RH WING W/DR RED	RED
3	331-203H86	DECK, RCB RH WING W/DR YELLOW	YELLOW
4	330-835D	WING SKID SHOE	
5	331-120H	HARDENED WING SKID SHOE	
6	331-207H	PANEL, SLOPED SIDE SKIRT RH	Available in Item 7
7	334-252K	LP RH SIDE SKIRT ASY, BEIGE	
7	334-252K81	LP RH SIDE SKIRT ASY, GREEN	GREEN
7	334-252K82	LP RH SIDE SKIRT ASY, ORANGE	ORANGE
7	334-252K83	LP RH SIDE SKIRT ASY, RED	RED
7	334-252K86	LP RH SIDE SKIRT ASY, YELLOW	YELLOW
8	800-001C	GREASE ZERK STRAIGHT 1/4-28	
9	802-022C	HHCS 3/8-16X1 1/2 GR5	
10	802-155C	RHSNB 3/8-16X1 1/4 GR5	
11	802-214C	RHSNB 1/2-13X1 1/4 GR5	
12	802-466C	PLOW 3/8-16X1 1/4 GR5	
13	803-014C	NUT HEX 3/8-16 PLT	
14	803-037C	NUT HEX WHIZ 1/2-13 PLT GR5	
15	803-198C	NUT HEX WHIZ 3/8-16 PLT	
16	804-013C	WASHER LOCK SPRING 3/8 PLT	
17	805-195C	PIN HTCH .75X5.25 USBL W/PIN	
18	840-273C	PLUG LP 3" ID RUBBER	

Deck Wing Drive Components

Applies to Models: RCBM6610 SERIES 2 S/N 944730+, RCB6610 SERIES 2 S/N 944730+

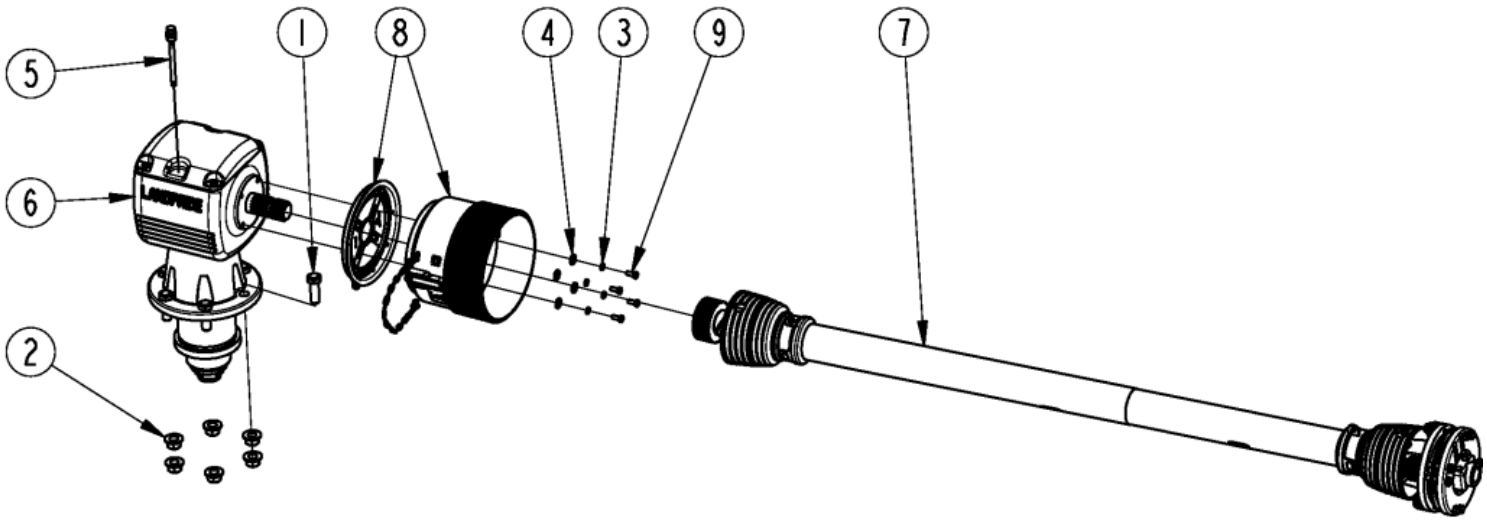

Deck Wing Drive Components

Applies to Models: RCBM6610 SERIES 2 S/N 944730+, RCB6610 SERIES 2 S/N 944730+

Ref.	Part No.	Part Description	Comments
	DWG 37969	Image No.	
1	802-065C	HHCS 3/4-10X2 1/4 GR5	
2	803-299C	NUT HEX FLG TOP LK 3/4-10 PLT	
3	804-009C	WASHER LOCK SPRING 5/16 PLT	
4	804-010C	WASHER FLAT 5/16 USS PLT	
5	826-486C	COMER U0.125.7003.00 DIPSTICK	
6	826-730C	GBOX RC60 1:1.60 REV	540 RPM
6	826-729C	GBOX RC60 1:1.60 STD	540 RPM reverse gearbox
6	826-324C	RPBY 826-944C	1000 RPM
6	826-322C	GBOX RCM60 1:1.21 STD	1000 RPM reverse gearbox
7	826-812C	DRVLN C5 48 1.75-20 FX CLTCH	
8	837-066C	DRVLN SHLD CONE,2 PIECE 8.25L	
9	842-243C	HHCS M8X1.25X20 GR8.8 THD-LCK	

HItch A-Frame

Applies to Models: RCBM6610 SERIES 2 S/N 944730+, RCB6610 SERIES 2 S/N 944730+

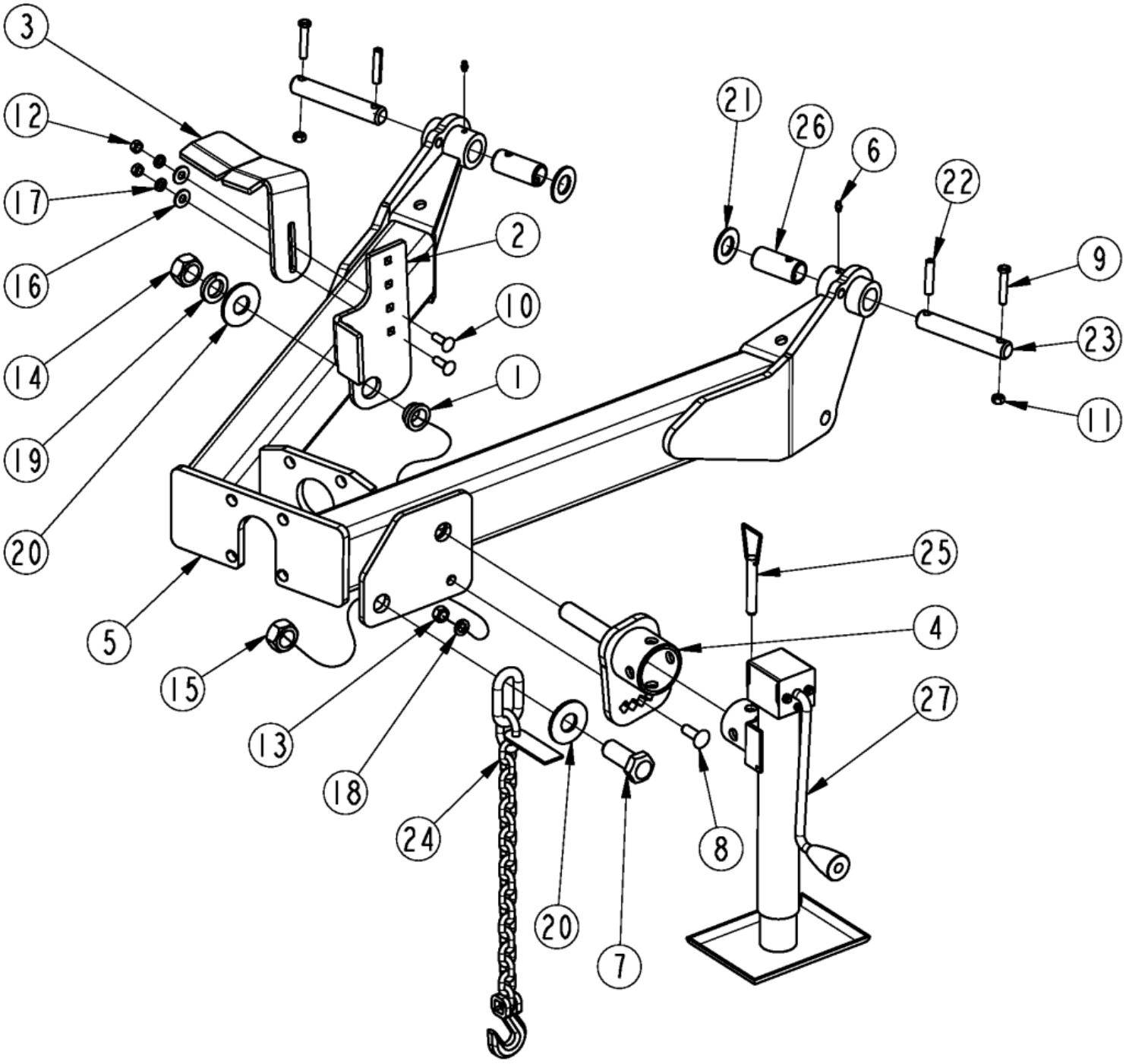

HItch A-Frame

Applies to Models: RCBM6610 SERIES 2 S/N 944730+, RCB6610 SERIES 2 S/N 944730+

Ref.	Part No.	Part Description	Comments
	DWG 39008	Image No.	
1	331-087D	PTO HANGER BUSHING	
2	331-088D	PTO HANGER STOP	
3	331-089D	PTO HANGER	
4	331-561H	ADJUSTABLE JACK MOUNT	
5	331-579H	HITCH W/ ADJ JACK MNT	
6	800-001C	GREASE ZERK STRAIGHT 1/4-28	
7	802-096C	HHCS 1-8X2 1/2 GR5	
8	802-106C	RHSNB 1/2-13X1 1/2 GR5	
9	802-143C	HHCS 3/8-16X2 GR5	
10	802-155C	RHSNB 3/8-16X1 1/4 GR5	
11	803-013C	NUT LOCK 3/8-16 PLT	
12	803-014C	NUT HEX 3/8-16 PLT	
13	803-020C	NUT HEX 1/2-13 PLT	
14	803-031C	NUT HEX 1-8 PLT	
15	803-168C	NUT HEX TOP LOCK 1-8 PLT	
16	804-011C	WASHER FLAT 3/8 USS PLT	
17	804-013C	WASHER LOCK SPRING 3/8 PLT	
18	804-015C	WASHER LOCK SPRING 1/2 PLT	
19	804-027C	WASHER LOCK SPRING 1 PLT	
20	804-028C	WASHER FLAT 1 USS PLT	
21	804-029C	WASHER FLAT 1 SAE	S/N 1000300+
22	805-249C	PIN ROLL 3/8 X 2 PLT	S/N 1000300+
23	805-548C	PIN 1.0 X 4.62 USBL HRDN	S/N 1000300+
23	805-292C	PIN 1.0X4.42 USBL HRD PLT	S/N 1000299- Does not take a roll pin or washer
24	890-182C	SAFETY CHAIN 10000 LB	
25		NUT HEX TOP LOCK 1-8 PLT	Pin included with sidewind jack
26	890-970C	BUSHING 1.25ODX1.00IDX2.87	
27	891-524C	SIDEWIND JACK 7000 LB	

Hitch Ball Coupler

Applies to Models: RCBM6610 SERIES 2 S/N 944730+, RCB6610 SERIES 2 S/N 944730+

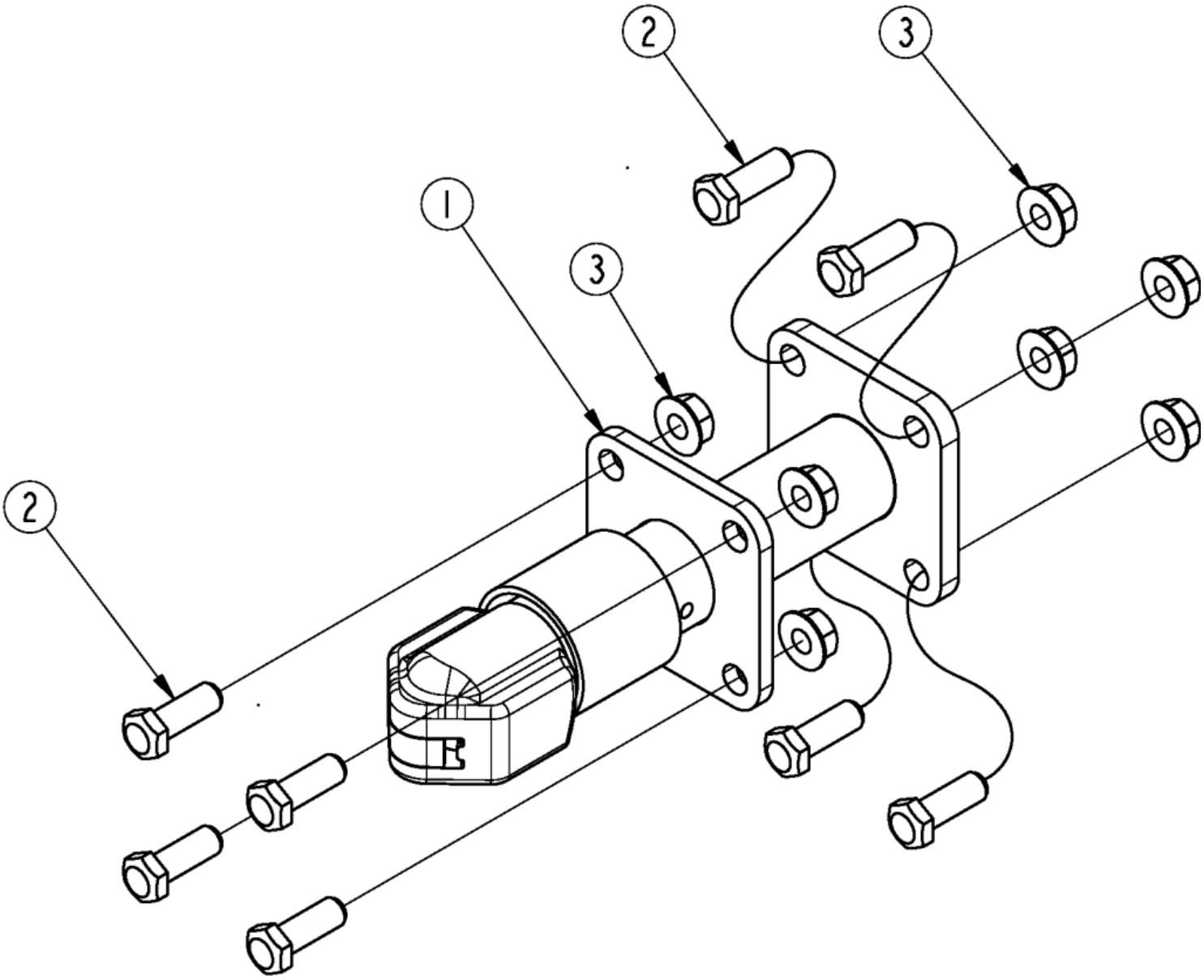

Hitch Ball Coupler

Applies to Models: RCBM6610 SERIES 2 S/N 944730+, RCB6610 SERIES 2 S/N 944730+

Ref.	Part No.	Part Description	Comments
	DWG 26568	Image No.	
	330-335A	BALL HITCH *	For 2-5/16" Ball
1	330-348H	BALL HITCH	
2	802-053C	HHCS 5/8-11X1 3/4 GR5 FTHD	
3	803-304C	NUT HEX WHIZ 5/8-11 PLT	

Hitch Bar Tite

Applies to Models: RCBM6610 SERIES 2 S/N 944730+, RCB6610 SERIES 2 S/N 944730+

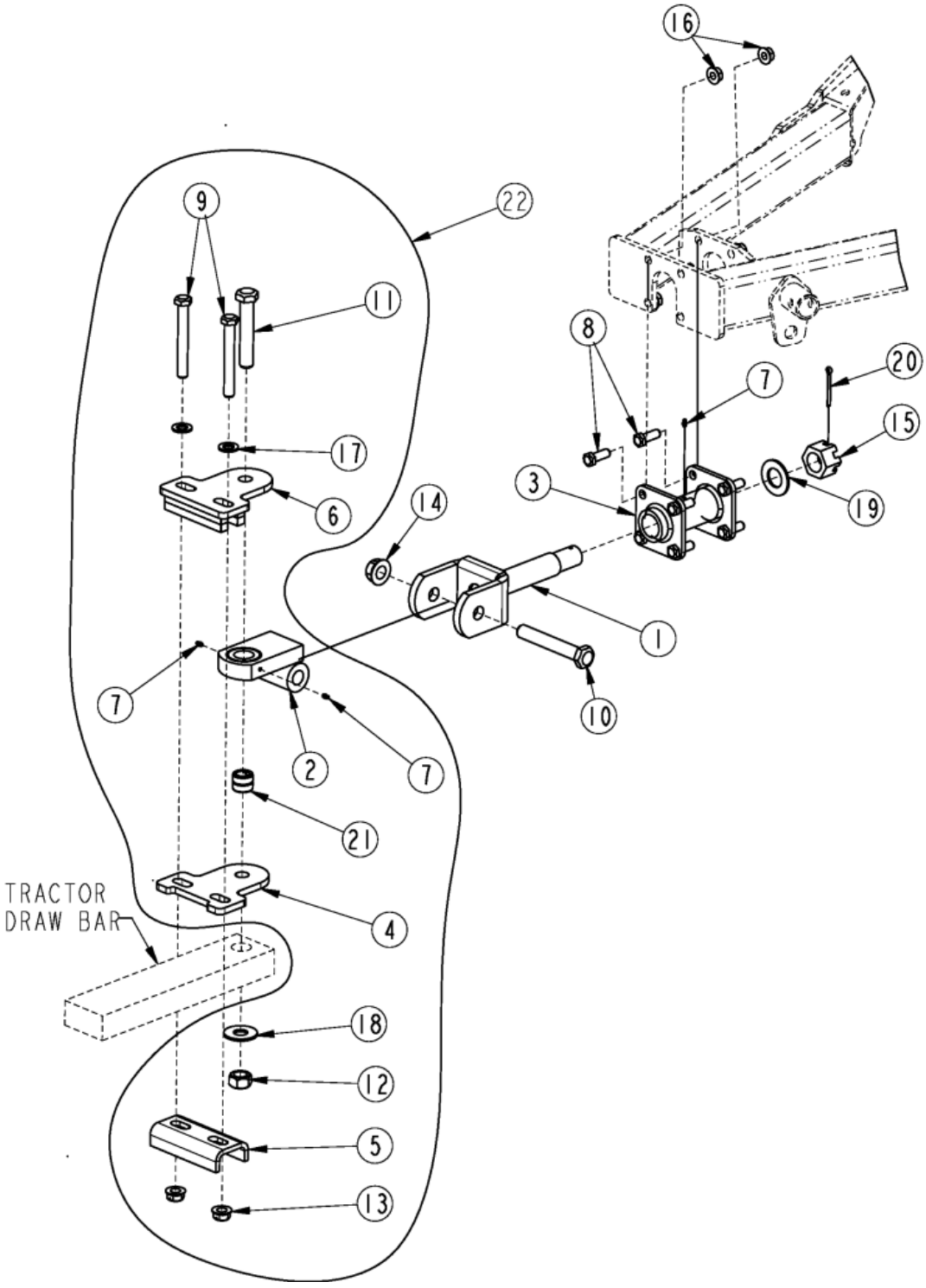

Hitch Bar Tite

Applies to Models: RCBM6610 SERIES 2 S/N 944730+, RCB6610 SERIES 2 S/N 944730+

Ref.	Part No.	Part Description	Comments
	DWG 26569	Drawing Image Number	
	330-333A	BAR TITE HITCH	
		*	
1	318-358H	SHAFT WELDMENT	
2	318-834H	WELDMENT HITCH CLEVIS	
3	330-271H	SWIVEL RECEIVER	
4	330-563D	HITCH WEAR PLATE WIDE	
5	330-564D	FORMED HITCH SUPPORT WIDE	
6	330-975H	BAR TITE WIDE TOP	
7	800-001C	GREASE ZERK STRAIGHT 1/4-28	
8	802-053C	HHCS 5/8-11X1 3/4 GR5 FTHD	
9	802-070C	HHCS 3/4-10X6 GR5	
10	802-074C	HHCS 1-8X6 1/2 GR5	
11	802-205C	HHCS 1-8X5 1/2 GR5	
12	803-168C	NUT HEX TOP LOCK 1-8 PLT	
13	803-181C	NUT HEX FLANGE LOCK 3/4-10 PLT	
14	803-258C	NUT HEX FLG LOCK 1-8 GR B PLT	
15	803-301C	NUT HEX SLOTTED 1 1/2-6 PLT	
16	803-304C	NUT HEX WHIZ 5/8-11 PLT	
17	804-025C	WASHER FLAT 3/4 SAE PLT	
18	804-028C	WASHER FLAT 1 USS PLT	
19	804-171C	WASHER FLAT 1.50 HARD ASTMF436	
20	805-105C	PIN COTTER 1/4 X 2 1/2 PLT	
21	890-862C	BUSHING 1.50ODX1.00IDX1.25	
22	330-974K	BAR TITE HITCH WIDE	

Hitch LP Performance S/N 1000385-

Applies to Models: RCBM6610 SERIES 2 S/N 944730+, RCB6610 SERIES 2 S/N 944730+

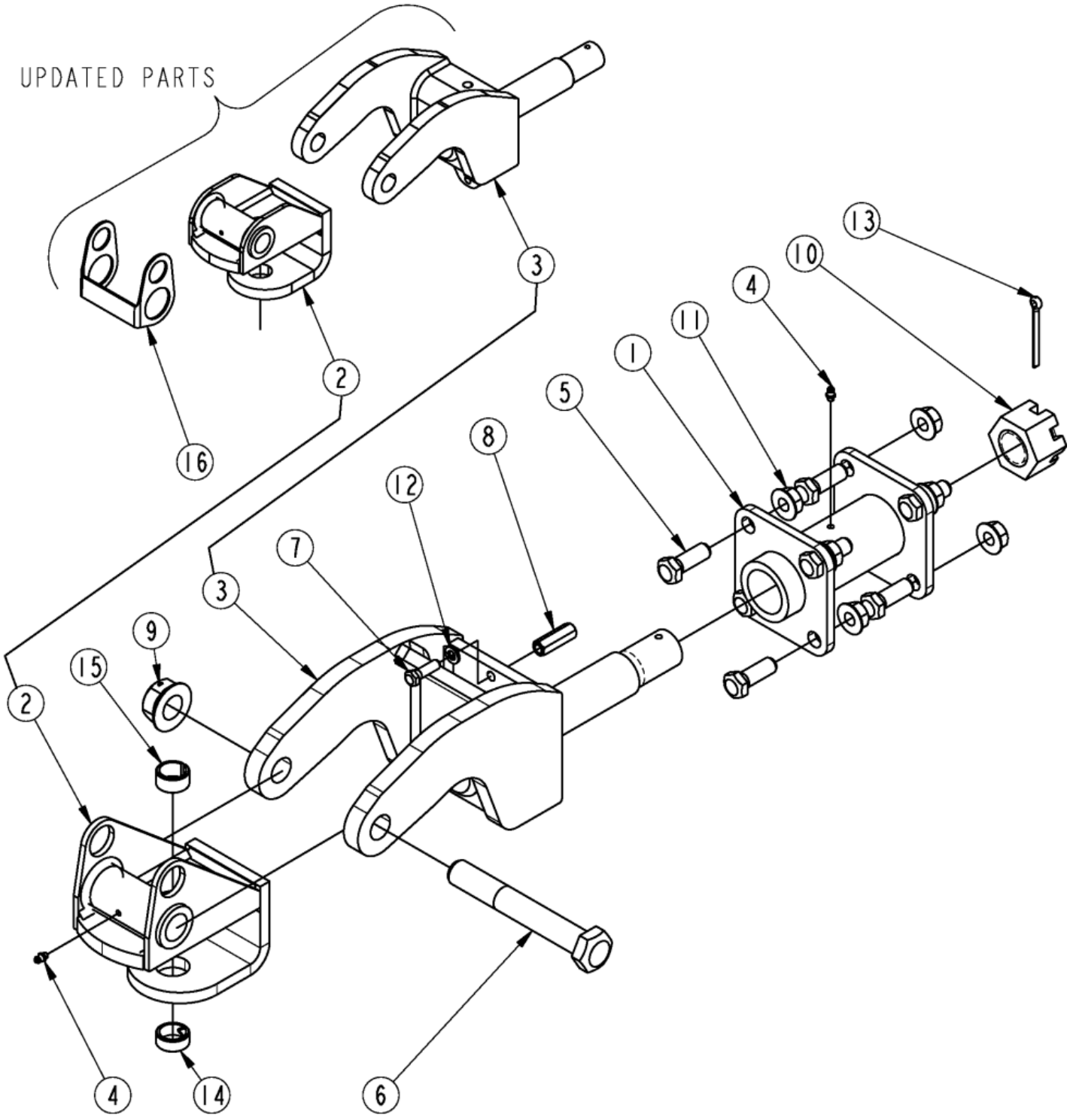

Hitch LP Performance S/N 1000385-

Applies to Models: RCBM6610 SERIES 2 S/N 944730+, RCB6610 SERIES 2 S/N 944730+

Ref.	Part No.	Part Description	Comments
	DWG 37646	Image No.	
	334-045A	LP PERFORMANCE HITCH	
1	330-271H	SWIVEL RECEIVER	
2	334-046H	HITCH CLEVIS	If you order this part you will receive the updated version. You will also need to order item 16 to go with the updated item 2
3	334-048H	HITCH YOKE	If you order this part you will receive the updated version
4	800-001C	GREASE ZERK STRAIGHT 1/4-28	
5	802-053C	HHCS 5/8-11X1 3/4 GR5 FTHD	
6	802-075C	HHCS 1-8X7 GR5	
7	802-079C	HHCS 3/8-16X1 1/4 GR5	
8	803-201C	NUT HEX COUPLER 3/8-16X1 3/4	
9	803-258C	NUT HEX FLG LOCK 1-8 GR B PLT	
10	803-301C	NUT HEX SLOTTED 1 1/2-6 PLT	
11	803-304C	NUT HEX WHIZ 5/8-11 PLT	
12	804-013C	WASHER LOCK SPRING 3/8 PLT	
13	805-105C	PIN COTTER 1/4 X 2 1/2 PLT	
14	890-836C	BUSHING 1 1/4X1X1/2 HRD	
15	890-850C	BUSHING 1 1/4X1X5/8	
16	331-543D	HITCH HOLDER	

Hitch LP Performance S/N 1000386+

Applies to Models: RCBM6610 SERIES 2 S/N 944730+, RCB6610 SERIES 2 S/N 944730+

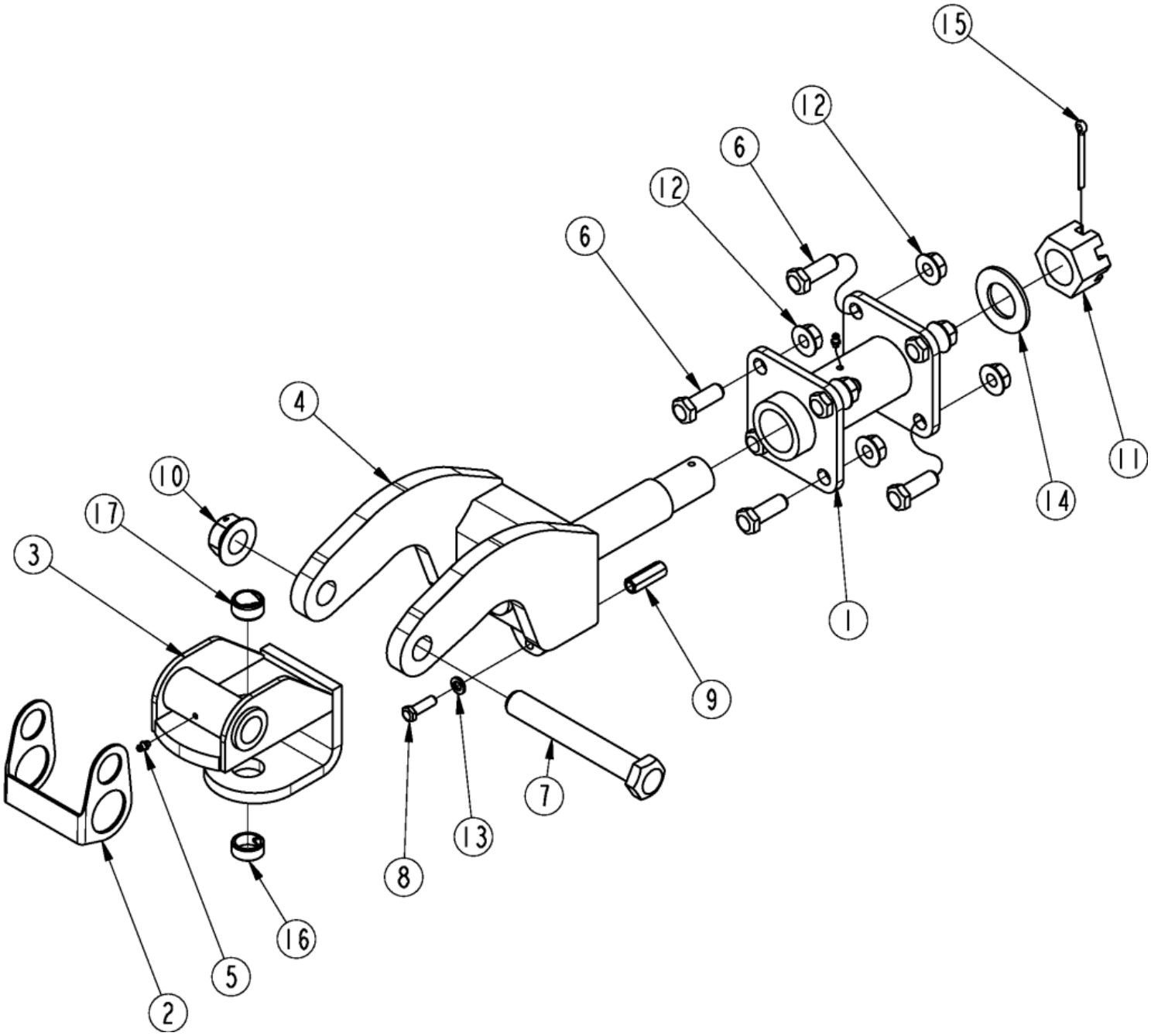

Hitch LP Performance S/N 1000386+

Applies to Models: RCBM6610 SERIES 2 S/N 944730+, RCB6610 SERIES 2 S/N 944730+

Ref.	Part No.	Part Description	Comments
	DWG 39286	Image No.	
	334-045A	LP PERFORMANCE HITCH	
		*	
1	330-271H	SWIVEL RECEIVER	
2	331-543D	HITCH HOLDER	
3	334-046H	HITCH CLEVIS	
4	334-048H	HITCH YOKE	
5	800-001C	GREASE ZERK STRAIGHT 1/4-28	
6	802-053C	HHCS 5/8-11X1 3/4 GR5 FTHD	
7	842-460C	HHCS 1-8X7 GR8 SPTHD	S/N _____+
7	802-075C	HHCS 1-8X7 GR5	S/N _____-
8	802-079C	HHCS 3/8-16X1 1/4 GR5	
9	803-201C	NUT HEX COUPLER 3/8-16X1 3/4	
10	803-258C	NUT HEX FLG LOCK 1-8 GR B PLT	
11	803-301C	NUT HEX SLOTTED 1 1/2-6 PLT	
12	803-304C	NUT HEX WHIZ 5/8-11 PLT	
13	804-013C	WASHER LOCK SPRING 3/8 PLT	
14	804-171C	WASHER FLAT 1.50 HARD ASTMF436	
15	805-105C	PIN COTTER 1/4 X 2 1/2 PLT	
16	890-836C	BUSHING 1 1/4X1X1/2 HRD	
17	890-850C	BUSHING 1 1/4X1X5/8	

Hitch Pintle

Applies to Models: RCBM6610 SERIES 2 S/N 944730+, RCB6610 SERIES 2 S/N 944730+

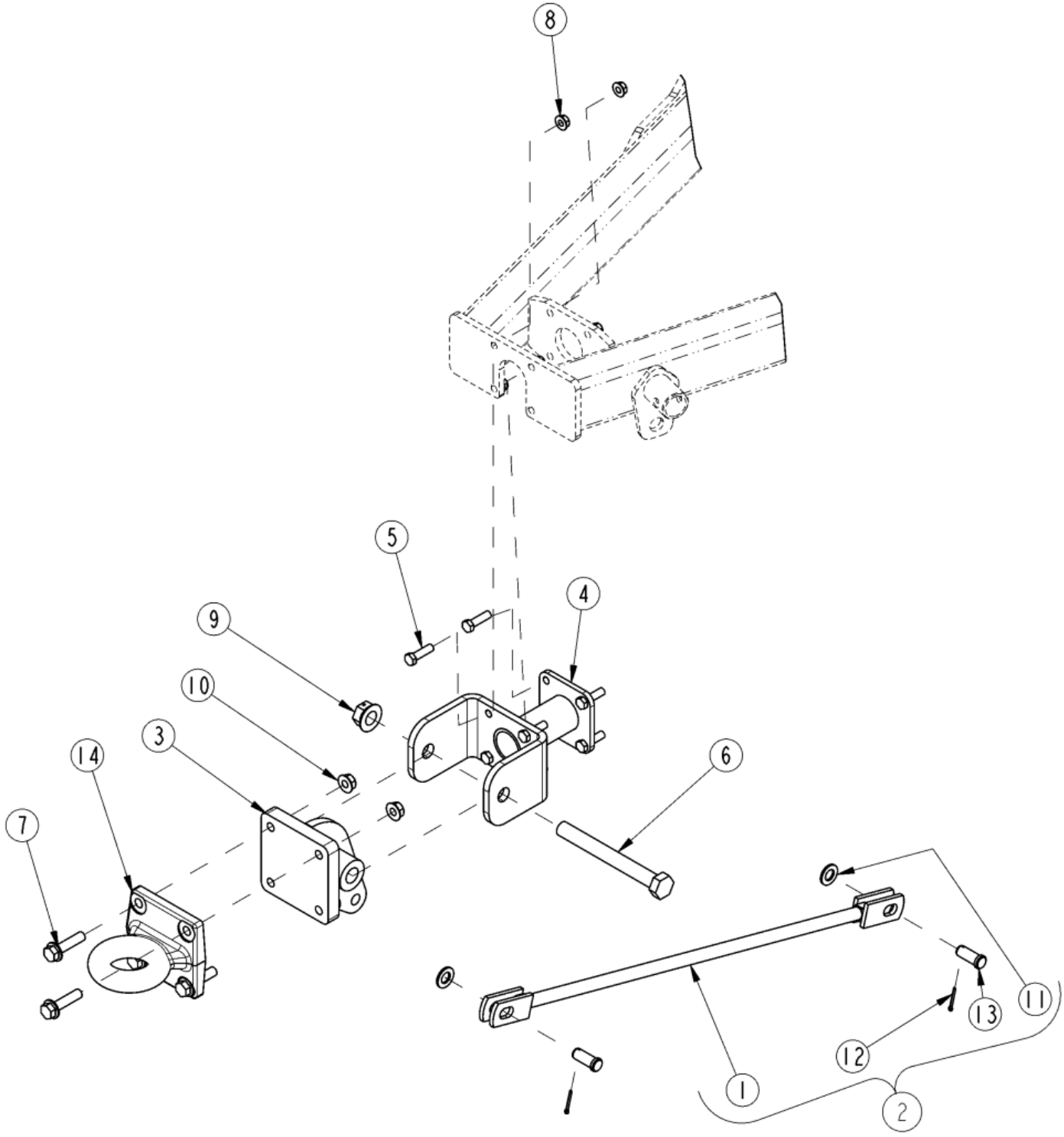

Hitch Pintle

Applies to Models: RCBM6610 SERIES 2 S/N 944730+, RCB6610 SERIES 2 S/N 944730+

Ref.	Part No.	Part Description	Comments
	DWG 26570	Drawing Image Number	
	330-334A	PINTLE HITCH	
		*	
1	318-006H	WLDMT. CLEVIS LEVEL ROD	
2	318-053L	ASSY. LEVEL ROD CLEVIS	
3	318-556H	WLDMT. PINTLE HITCH CLEVIS	
4	330-223H	YOKE HITCH	
5	802-053C	HHCS 5/8-11X1 3/4 GR5 FTHD	
6	802-877C	HHCS 1-8X9 GR8 SPTHD	
7	802-729C	HFS 5/8-11X2 1/2 GR8 PLT	
8	803-304C	NUT HEX WHIZ 5/8-11 PLT	
9	803-258C	NUT HEX FLG LOCK 1-8 GR B PLT	
10	803-304C	NUT HEX WHIZ 5/8-11 PLT	
11	804-025C	WASHER FLAT 3/4 SAE PLT	
12	805-045C	PIN COTTER 5/32 X 1 1/4 LG	
13	805-083C	PIN CLVS .75X1.50 USBL HT	
14	890-806C	PINTLE HOOK SQ.BASE BDB1250-15	

Hitch Standard Pivoting Clevis

Applies to Models: RCBM6610 SERIES 2 S/N 944730+, RCB6610 SERIES 2 S/N 944730+

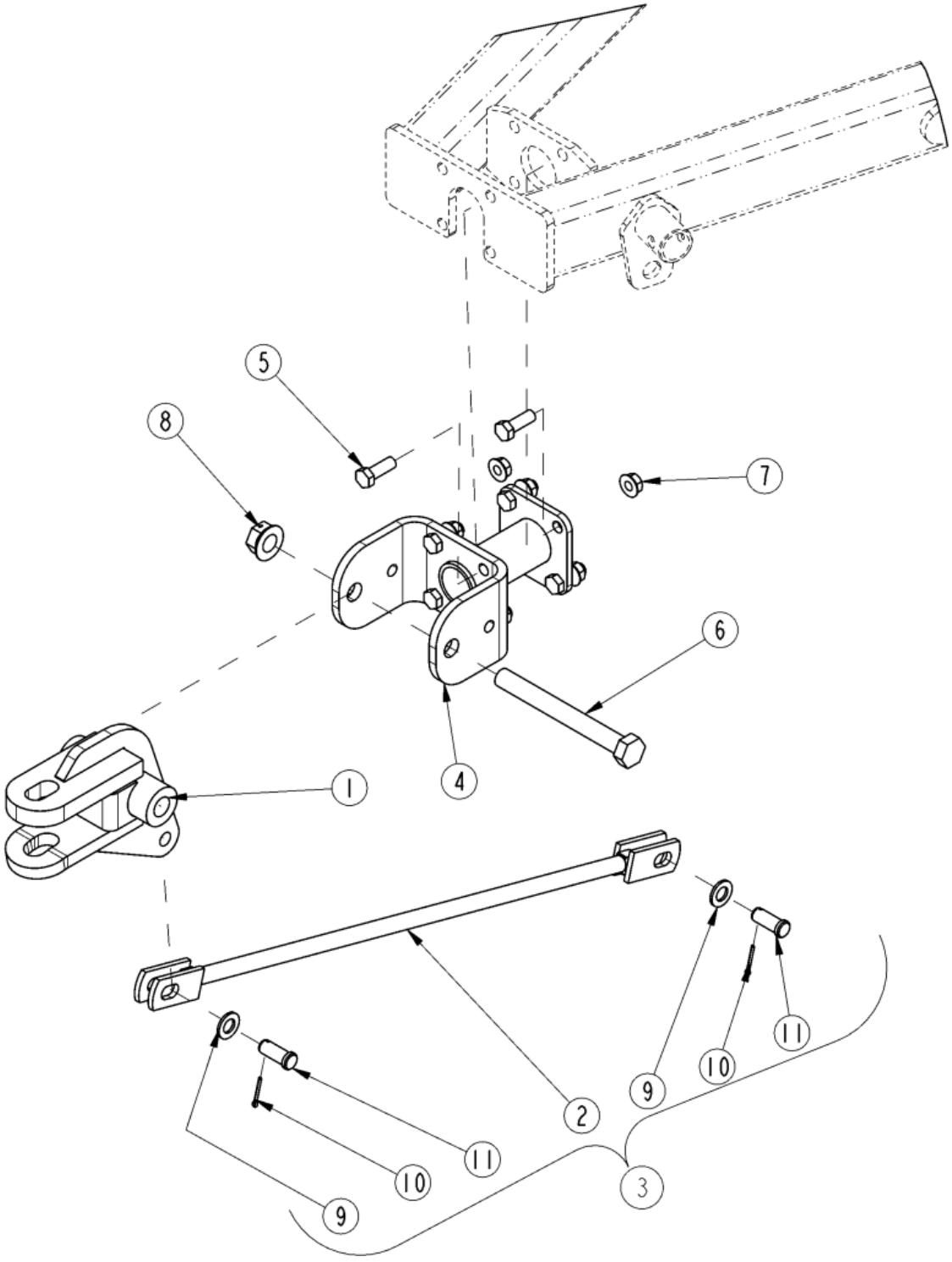

Hitch Standard Pivoting Clevis

Applies to Models: RCBM6610 SERIES 2 S/N 944730+, RCB6610 SERIES 2 S/N 944730+

Ref.	Part No.	Part Description	Comments
	DWG 26557	Drawing Image Number	
	330-225A	STANDARD HITCH	
		*	
1	318-005H	WLDMT. TONGUE CLEVIS	
2	318-006H	WLDMT. CLEVIS LEVEL ROD	
3	318-053L	ASSY. LEVEL ROD CLEVIS	
4	330-223H	YOKE HITCH	
5	802-053C	HHCS 5/8-11X1 3/4 GR5 FTHD	
6	802-877C	HHCS 1-8X9 GR8 SPTHD	
7	803-304C	NUT HEX WHIZ 5/8-11 PLT	
8	803-258C	NUT HEX FLG LOCK 1-8 GR B PLT	
9	804-025C	WASHER FLAT 3/4 SAE PLT	
10	805-045C	PIN COTTER 5/32 X 1 1/4 LG	
11	805-083C	PIN CLVS .75X1.50 USBL HT	

Leveling Rod (66 Series)

Applies to Models: RCBM6610 SERIES 2 S/N 944730+, RCB6610 SERIES 2 S/N 944730+

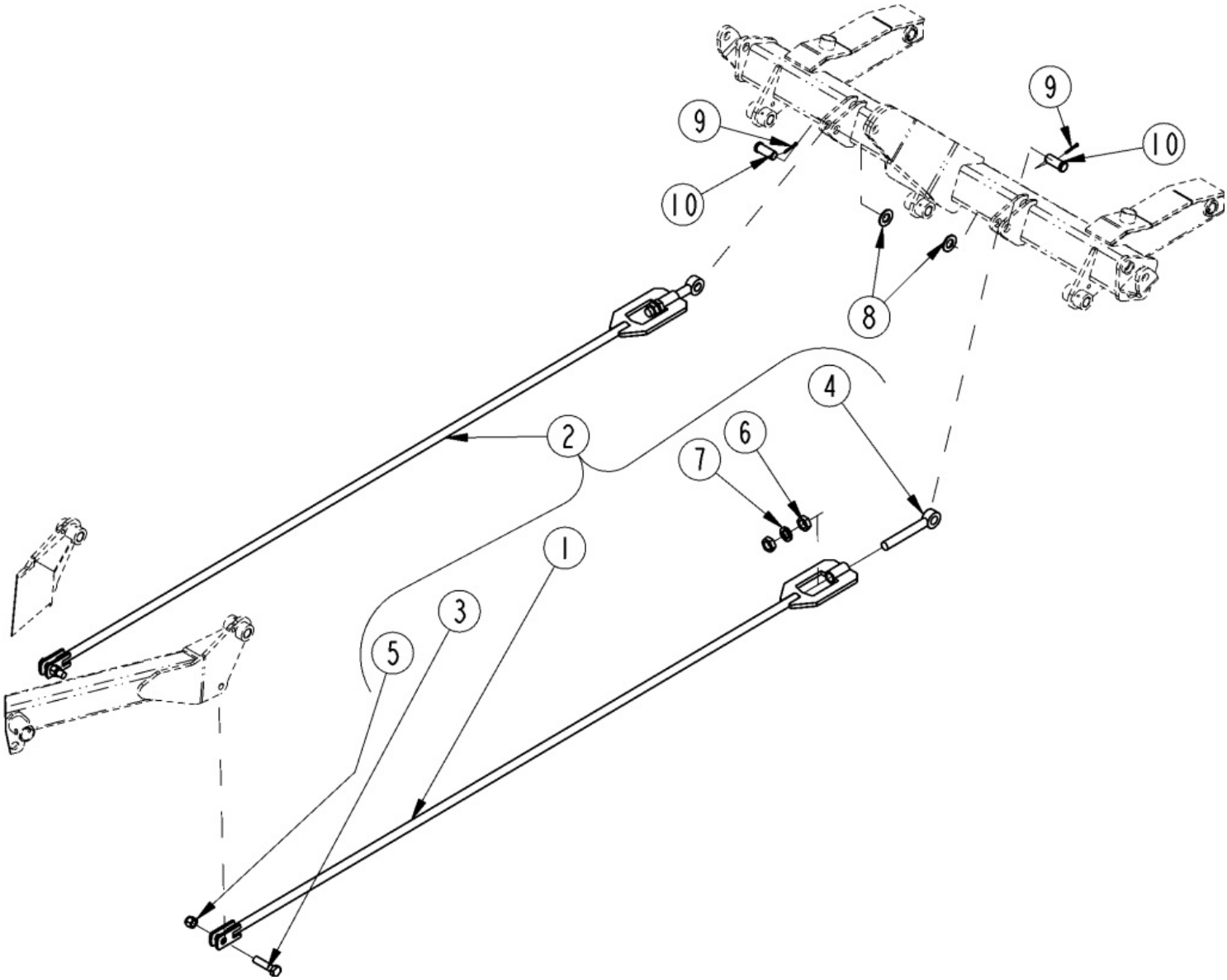

Leveling Rod (66 Series)

Applies to Models: RCBM6610 SERIES 2 S/N 944730+, RCB6610 SERIES 2 S/N 944730+

Ref.	Part No.	Part Description	Comments
	DWG 27840	Drawing Image Number	
1	330-195H	LEVELING ROD	
2	330-196L	ASY LEVELING ROD	
3	802-552C	HHCS 3/4-10X3 GR8	
4	802-754C	EYE BOLT 1-8X7 1/2 LG PLT SP	
5	803-025C	NUT HEX 3/4-10 PLT NYLOCK	
6	803-030C	NUT HEX JAM 1-8 PLT	
7	804-027C	WASHER LOCK SPRING 1 PLT	
8	804-029C	WASHER FLAT 1 SAE	
9	805-104C	PIN COTTER 3/16 X 1 1/2 PLT	
10	805-374C	PIN CLVS 1.0X2.06 USBL	

Off Center Lights 3.5 Inch (LED)

Applies to Models: RCBM6610 SERIES 2 S/N 944730+, RCB6610 SERIES 2 S/N 944730+

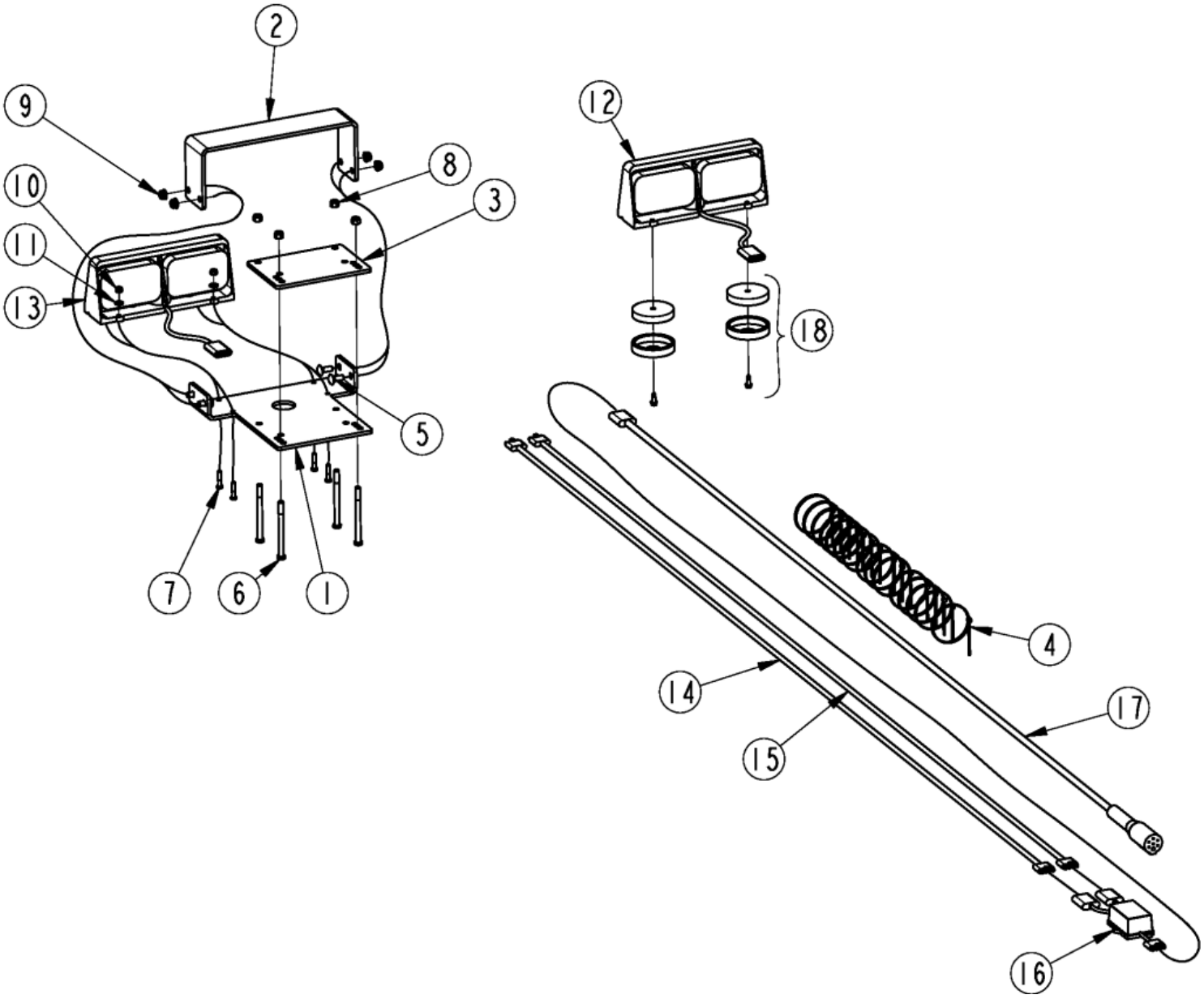

Off Center Lights 3.5 Inch (LED)

Applies to Models: RCBM6610 SERIES 2 S/N 944730+, RCB6610 SERIES 2 S/N 944730+

Ref.	Part No.	Part Description	Comments
	DWG 39037	Image No.	
	334-497L	OFFSET CUTTER LIGHT KIT 3.5"	S/N 1150618+ Lights are now standard
	331-683A	OFFSET CUTTER LIGHT KIT 3.5" *	(Obsolete) S/N 1150617- Lights were optional
1	330-965D	LIGHT MNT	
2	330-966D	LIGHT GUARD	
3	330-967D	LIGHT MNT CLAMP	
4	800-060C	CABLE TIE .19X14.25 3DIA 50LB	
5	802-015C	RHSNB 3/8-16X1 GR5	
6	802-318C	HHCS 3/8-16X5 GR5	
7	802-224C	HHCS 1/4-20X1 1/4 GR5	
8	803-078C	NUT LOCK 3/8-16 NYLON INSERT	
9	803-209C	NUT FLANGE LOCK 3/8-16 PLT	
10	803-255C	NUT HEX NYLOCK 1/4-20	
11	804-007C	WASHER FLAT 1/4 SAE PLT	
12	891-522C	DUAL LED LIGHT LH	Complete light assembly
12	J-37-R	RED LED LENS MODULE	Red lens
12	J-37-A	AMBER LED LENS MODULE	Amber lens
12	J-AC1-15-B	BLACK LENS COVER	Black lens
13	891-523C	DUAL LED LIGHT RH	Complete light assembly
13	J-37-R	RED LED LENS MODULE	Red lens
13	J-37-A	AMBER LED LENS MODULE	Amber lens
13	J-AC1-15-B	BLACK LENS COVER	Black lens
14	891-529C	LIGHT WIRE HARNESS 8'	
15	891-530C	RPBY 891-529C	Obsolete
16	891-531C	ENHANCE MODULE	
17	891-532C	LEAD WIRE HARNESS 8'	
18	891-534C	LIGHT MAGNETS WITH HARDWARE	

Splitter Box Sliding Cover

Applies to Models: RCBM6610 SERIES 2 S/N 944730+, RCB6610 SERIES 2 S/N 944730+

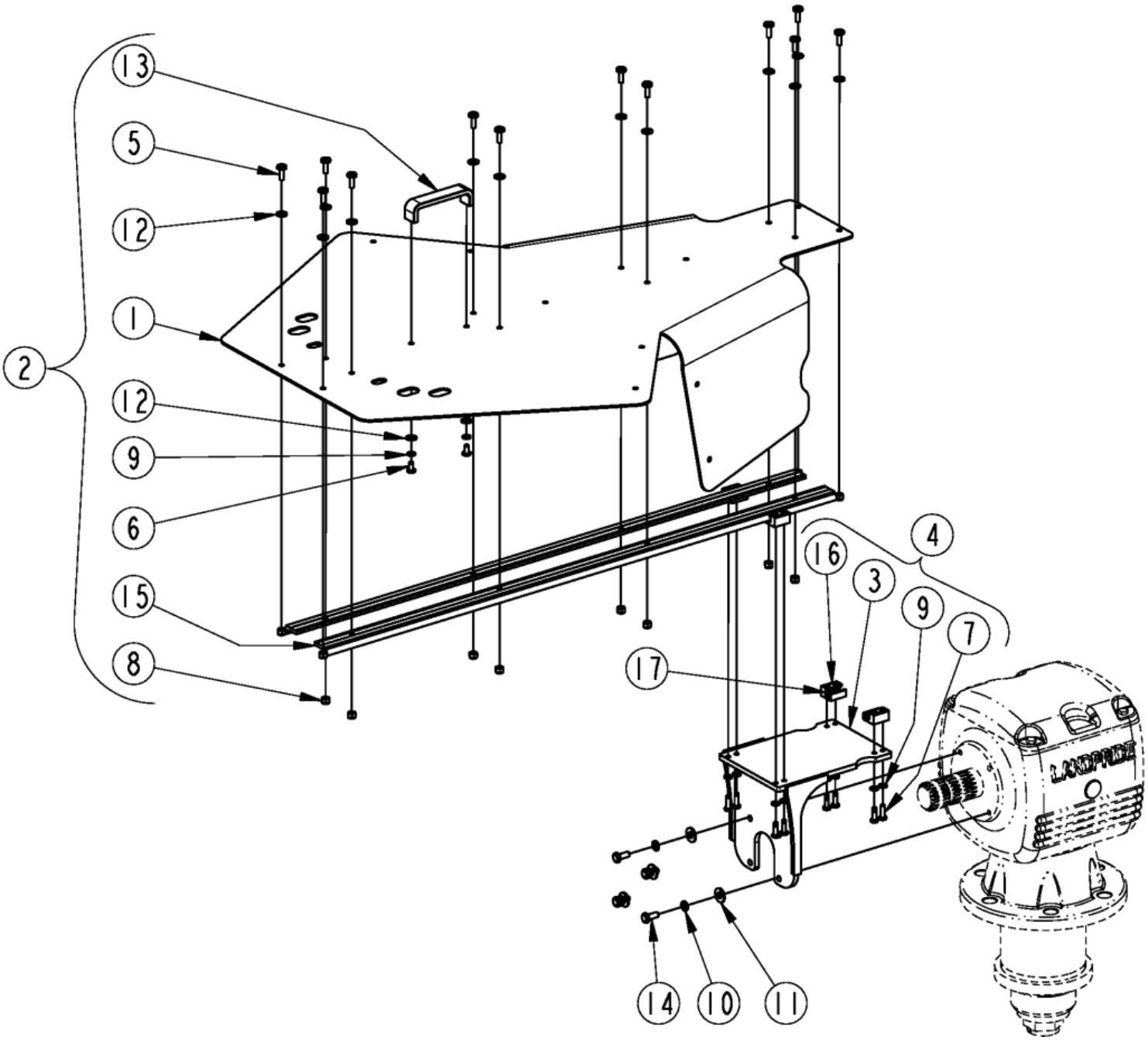

Splitter Box Sliding Cover

Applies to Models: RCBM6610 SERIES 2 S/N 944730+, RCB6610 SERIES 2 S/N 944730+

Ref.	Part No.	Part Description	Comments
	DWG 37650	Image No.	
1	331-076D	SLIDING SHIELD	
2	331-552V	SLIDING SHIELD ASSY, 50 GB	
3	331-554H	SLIDING SHIELD GB MNT, 50/60GB	
4	331-555S	GEARBOX BEARING BLOCK MNT	
5	801-248C	PAN HD 1/4-20X3/4 PHILLIPS SS	
6	802-301C	HHCS 1/4-20X1/2 GR5	
7	802-843C	HHCS M6X1X20 18-8 SS	
8	803-255C	NUT HEX NYLOCK 1/4-20	
9	804-006C	WASHER LOCK SPRING 1/4 PLT	
10	804-009C	WASHER LOCK SPRING 5/16 PLT	
11	804-010C	WASHER FLAT 5/16 USS PLT	
12	804-034C	WASHER FLAT 1/4 SAE SS	
13	817-936C	HANDLE GRAB 4 1/8WIDE1 1/2TALL	
14	842-243C	HHCS M8X1.25X20 GR8.8 THD-LCK	
15	891-485C	WS-10 GUIDE RAIL	
16	891-487C	FLOATING ZINC BEARING BLOCK	With Liners
17	J200UM-01-10.4	REPLACEMENT LINER	

Weight Box (6610)

Applies to Models: RCBM6610 SERIES 2 S/N 944730+, RCB6610 SERIES 2 S/N 944730+

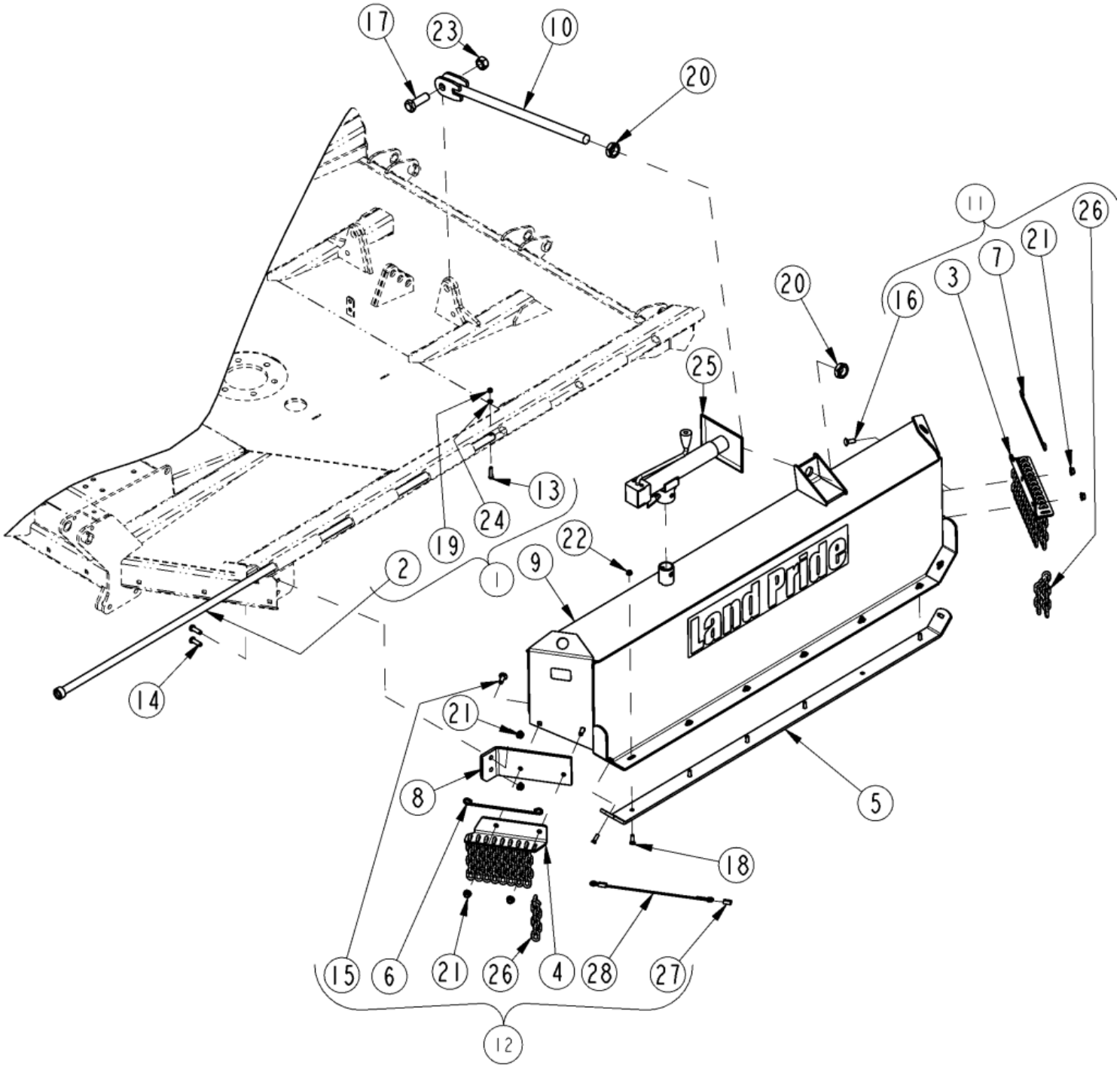

Weight Box (6610)

Applies to Models: RCBM6610 SERIES 2 S/N 944730+, RCB6610 SERIES 2 S/N 944730+

Ref.	Part No.	Part Description	Comments
	DWG33297	Drawing Image Number	
1	318-695L	ASSY. HINGE ROD	
2	318-696H	WLDMT. HINGE ROD	
3	318-756D	CHAINGUARD, WEIGHT BOX REAR	
4	318-757D	CHAINGUARD, WEIGHT BOX FRT	
5	318-923D	SKID SHOE WTBX	
6	326-152D	ROUND ROD .25 X 14	
7	326-224D	ROUND ROD .25 X 16.50	
8	330-328D	LOCK, WEIGHTBOX FRT	
9	330-406H	WEIGHT BOX 56 SERIES LH	
10	330-410H	CLEVIS WEIGHTBOX LOCK	
11	330-919K	CHNGRD DBL REAR WGHTBX	
12	330-920K	CHNGRD CBL FRT WGHTBX LH DBL	
13	802-022C	HHCS 3/8-16X1 1/2 GR5	
14	802-091C	HHCS 1/2-13X1 1/2 GR5	
15	802-106C	RHSNB 1/2-13X1 1/2 GR5	
16	802-214C	RHSNB 1/2-13X1 1/4 GR5	
17	802-368C	HHCS 1-8X3 GR5	
18	802-466C	PLOW 3/8-16X1 1/4 GR5	
19	803-014C	NUT HEX 3/8-16 PLT	
20	803-032C	NUT HEX JAM 1 1/4-7 PLT	
21	803-037C	NUT HEX WHIZ 1/2-13 PLT GR5	
22	803-198C	NUT HEX WHIZ 3/8-16 PLT	
23	803-316C	NUT HEX LOCK 1-8 PLT	
24	804-013C	WASHER LOCK SPRING 3/8 PLT	
25	890-786C	SIDEWIND JACK 7000 LB	
26	891-208C	CHAIN WELD 5/16 GR 43X11-LINK	
27	891-236C	SWAGE CLAMP, 3/16 CABLE	
28	990-208R	AIRCRAFT CBL.3/16 7X7 GALV.	

Axle Center Standard

Applies to Models: RCBM6610 SERIES 2 S/N 944730+, RCB6610 SERIES 2 S/N 944730+

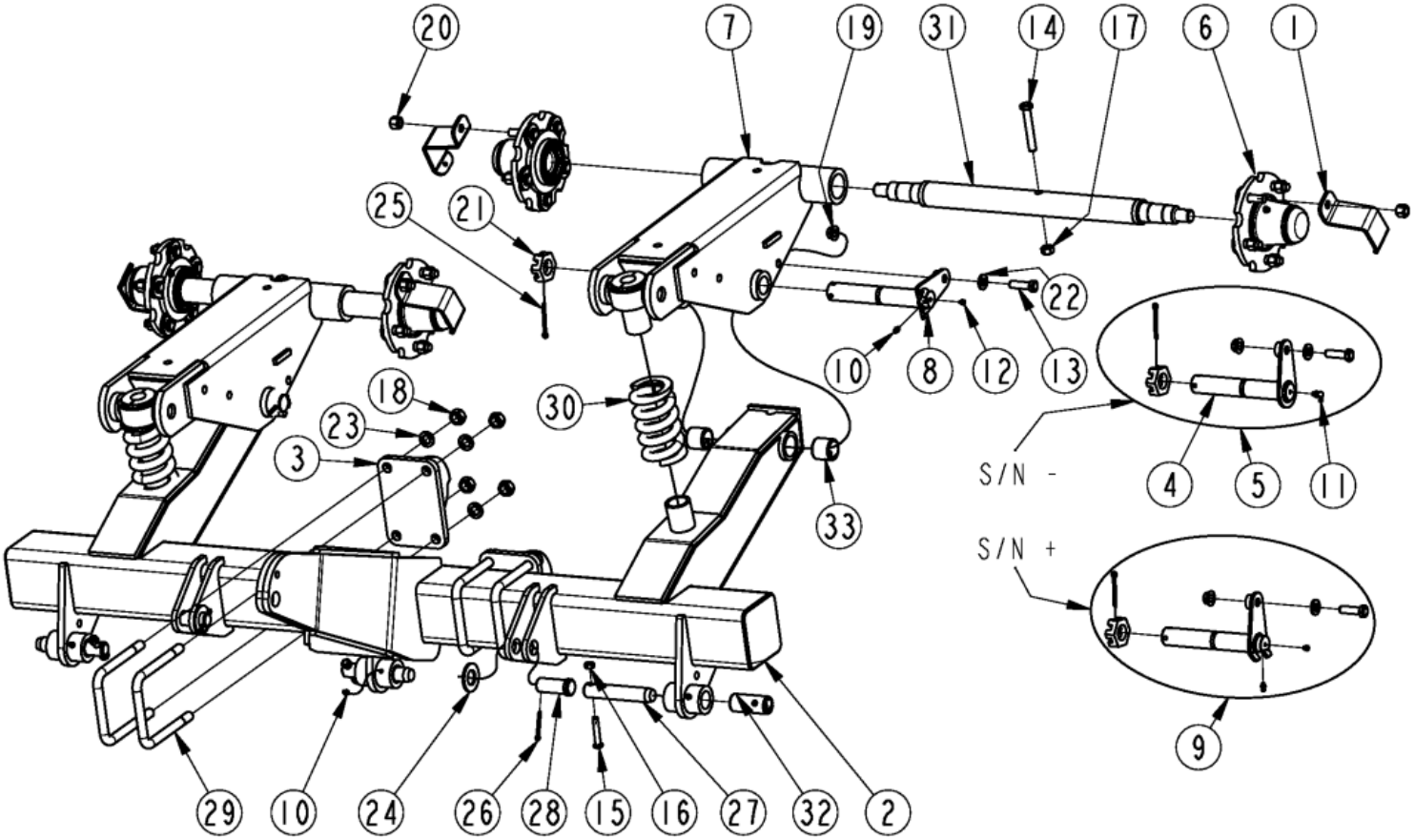

Axle Center Standard

Applies to Models: RCBM6610 SERIES 2 S/N 944730+, RCB6610 SERIES 2 S/N 944730+

Ref.	Part No.	Part Description	Comments
	DWG 39132	Image No.	
1	330-331D	PROTECTOR DUST CAP	
2	330-345H	AXLE CENTER STD REP	
3	330-415H	TOW LUG	
4	330-607H	PIVOT PIN TRAILING ARM	S/N 1081238-
5	330-609S	ASY PIVOT PIN TRAILING ARM	S/N 1081238-
6	330-938K	HUB 5 BOLT COMPLETE	
7	331-099H	TRAILING ARM CENTER	
8	334-448H	TRAILING ARM PIVOT PIN	S/N 1081239+
9	334-449S	TRAILING ARM PIVOT PIN ASY	S/N 1081239+
10	800-001C	GREASE ZERK STRAIGHT 1/4-28	
11	800-073C	GREASE ZERK 1/4-28 X 90-DEG	S/N 1081238-
12	801-229C	SCREW SLOTTED HEX 1/4-28X3/16	S/N 1081239+
13	802-082C	HHCS 1/2-13X1 3/4 GR5 FTHD	
14	802-099C	HHCS 1/2-13X3 1/4 GR5	
15	802-143C	HHCS 3/8-16X2 GR5	
16	803-013C	NUT LOCK 3/8-16 PLT	
17	803-019C	NUT LOCK 1/2-13 PLT	
18	803-024C	NUT LOCK 5/8-11 PLT	
19	803-169C	NUT HEX FLG LOCK 1/2-13 PLT	
20	803-310C	NUT HEX 1/2-20 X 5/8 HIGH	
21	803-381C	NUT HEX JAM SLOTTED 1 1/4-7	
22	804-016C	WASHER FLAT 1/2 SAE PLT	
23	804-022C	WASHER LOCK SPRING 5/8 PLT	
24	804-029C	WASHER FLAT 1 SAE	
25	805-058C	PIN COTTER 3/16 X 2	
26	805-104C	PIN COTTER 3/16 X 1 1/2 PLT	
27	805-292C	PIN 1.0X4.42 USBL HRD PLT	
28	805-374C	PIN CLVS 1.0X2.06 USBL	
29	806-213C	U-BOLT 5/8-11 X 4 17/32 X 6	
30	807-271C	SPRING COMP 3.20OD .63W 5.5L	
31	815-425C	SPINDLE, DUAL BOLT-ON 7/8-14	
32	890-970C	BUSHING 1.25ODX1.00IDX2.87	
33	891-177C	BHG 1.50ODX1.25X1.38	

Axle Center Tandem S/N 1235290-

Applies to Models: RCBM6610 SERIES 2 S/N 944730+, RCB6610 SERIES 2 S/N 944730+

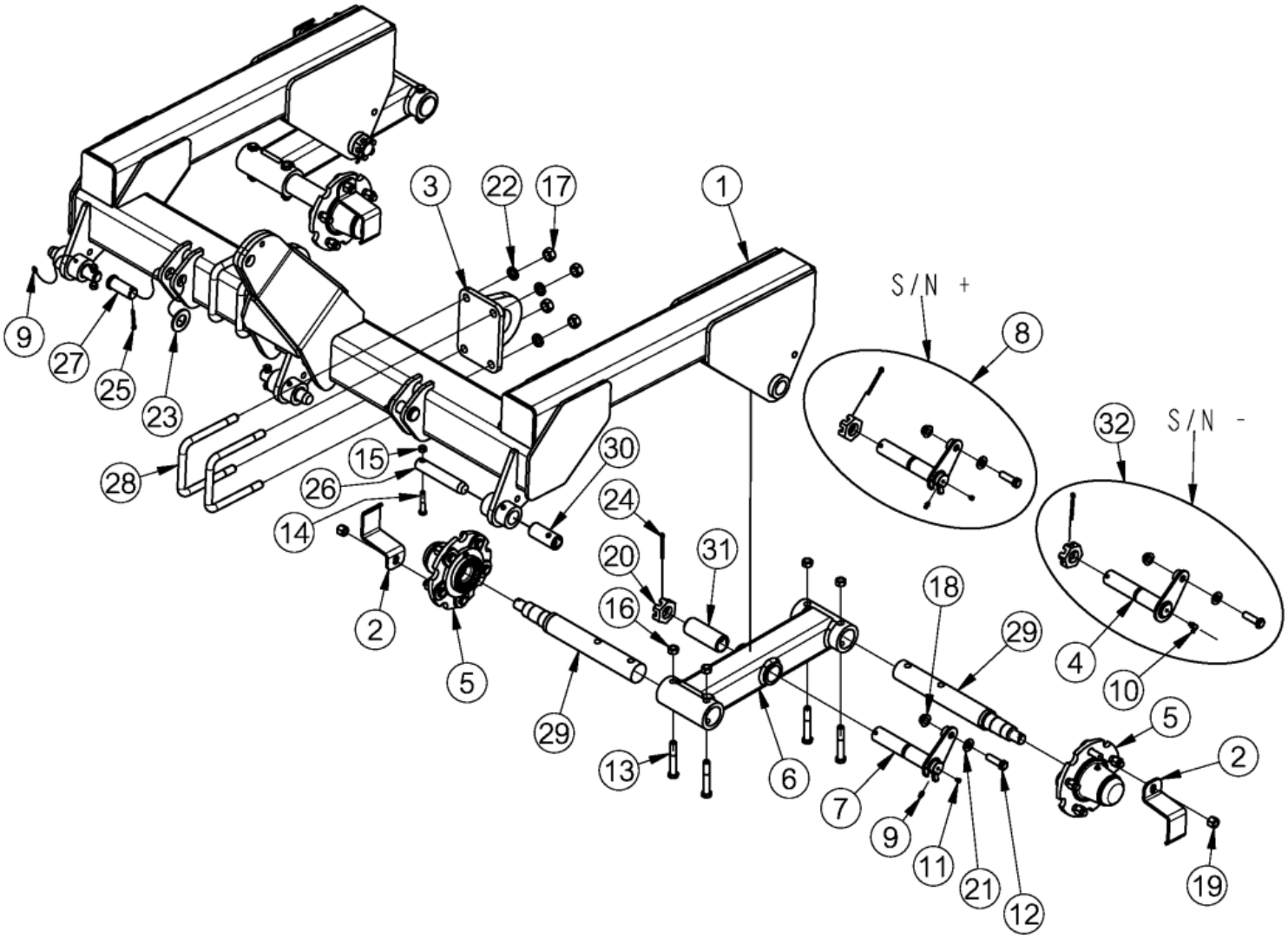

Axle Center Tandem S/N 1235290-

Applies to Models: RCBM6610 SERIES 2 S/N 944730+, RCB6610 SERIES 2 S/N 944730+

Ref.	Part No.	Part Description	Comments
	DWG 39148	Image No.	
1	330-289H	AXLE CENTER TANDEM	
2	330-331D	PROTECTOR DUST CAP	
3	330-415H	TOW LUG	
4	330-616H	PIVOT PIN TANDEM ARM	S/N 1081238-
5	330-938K	HUB 5 BOLT COMPLETE	
6	331-202H	TANDEM ARM, SHORT	
7	334-465H	WALKING TANDEM PIVOT PIN	S/N 1081239+
8	334-467S	WALKING TANDEM PIV PIN ASY	S/N 1081239+
9	800-001C	GREASE ZERK STRAIGHT 1/4-28	
10	800-073C	GREASE ZERK 1/4-28 X 90-DEG	S/N 1081238-
11	801-229C	SCREW SLOTTED HEX 1/4-28X3/16	
12	802-082C	HHCS 1/2-13X1 3/4 GR5 FTHD	
13	802-099C	HHCS 1/2-13X3 1/4 GR5	
14	802-143C	HHCS 3/8-16X2 GR5	
15	803-013C	NUT LOCK 3/8-16 PLT	
16	803-019C	NUT LOCK 1/2-13 PLT	
17	803-024C	NUT LOCK 5/8-11 PLT	
18	803-169C	NUT HEX FLG LOCK 1/2-13 PLT	
19	803-310C	NUT HEX 1/2-20 X 5/8 HIGH	
20	803-381C	NUT HEX JAM SLOTTED 1 1/4-7	
21	804-016C	WASHER FLAT 1/2 SAE PLT	
22	804-022C	WASHER LOCK SPRING 5/8 PLT	
23	804-029C	WASHER FLAT 1 SAE	
24	805-058C	PIN COTTER 3/16 X 2	
25	805-104C	PIN COTTER 3/16 X 1 1/2 PLT	
26	805-292C	PIN 1.0X4.42 USBL HRD PLT	
27	805-374C	PIN CLVS 1.0X2.06 USBL	
28	806-213C	U-BOLT 5/8-11 X 4 17/32 X 6	
29	815-433C	SPINDLE, SINGLE BOLT-ON 7/8-14	
30	890-970C	BUSHING 1.25ODX1.00IDX2.87	
31	891-999C	BUSHING 1.50ODX1.25X3.93	S/N 1538169+
31	891-177C	BHG 1.50ODX1.25X1.38	S/N 1538168- (2 bushings required)
32	330-615S	ASY PIVOT PIN TANDEM ARM	S/N 1081238-

Axle Center Tandem S/N 1235291+

Applies to Models: RCBM6610 SERIES 2 S/N 944730+, RCB6610 SERIES 2 S/N 944730+

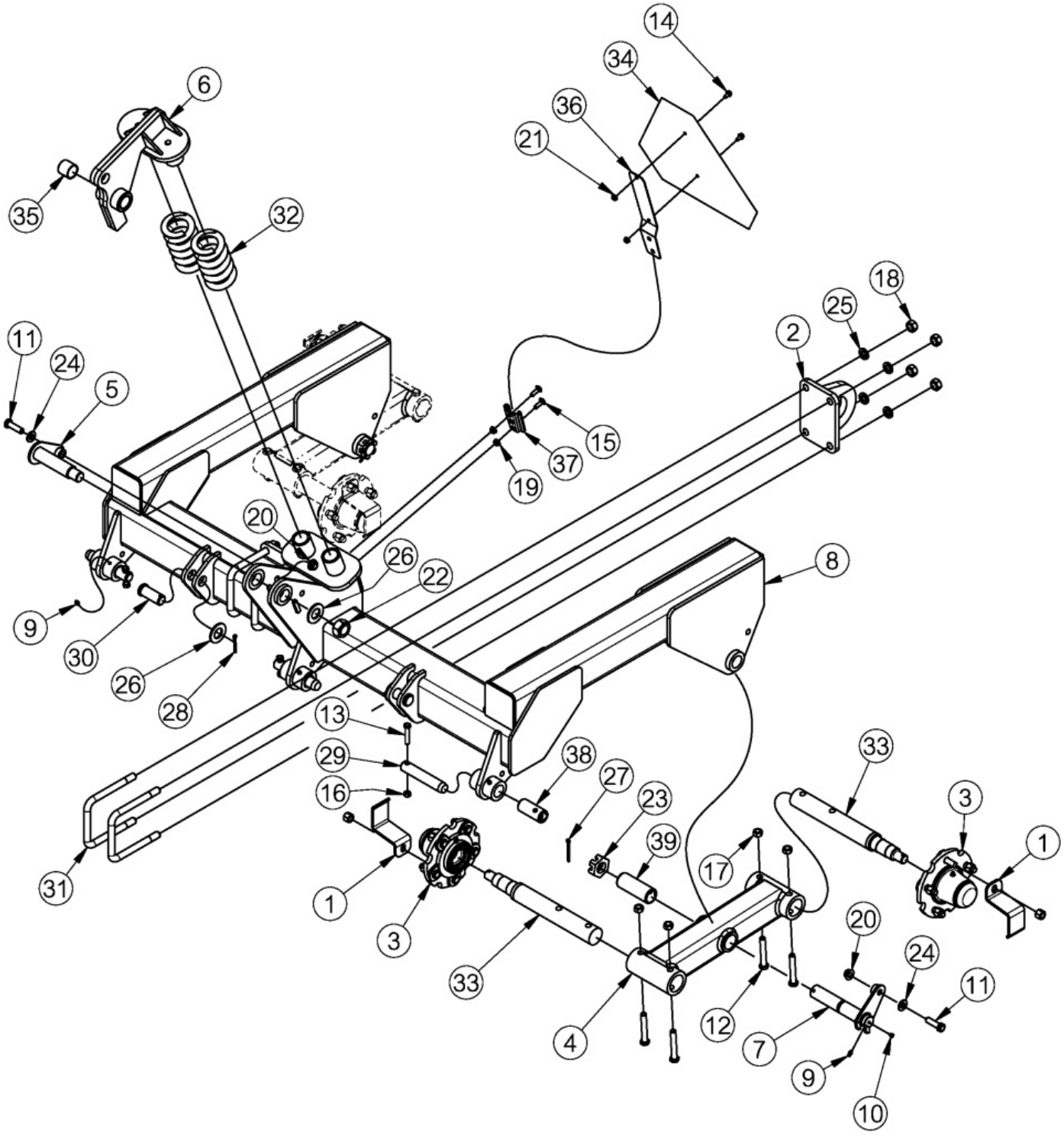

Axle Center Tandem S/N 1235291+

Applies to Models: RCBM6610 SERIES 2 S/N 944730+, RCB6610 SERIES 2 S/N 944730+

Ref.	Part No.	Part Description	Comments
	DWG 70421	Image No.	
1	330-331D	PROTECTOR DUST CAP	
2	330-415H	TOW LUG	
3	330-938K	HUB 5 BOLT COMPLETE	
4	331-202H	TANDEM ARM, SHORT	
5	331-709H	PIVOT PIN 4.5" USEABLE	
6	331-757H	CENTER SPRING ROCKER	
7	334-465H	WALKING TANDEM PIVOT PIN	
8	334-725H	AXLE CENTER TANDEM	
9	800-001C	GREASE ZERK STRAIGHT 1/4-28	
10	801-229C	SCREW SLOTTED HEX 1/4-28X3/16	
11	802-082C	HHCS 1/2-13X1 3/4 GR5 FTHD	
12	802-099C	HHCS 1/2-13X3 1/4 GR5	
13	802-143C	HHCS 3/8-16X2 GR5	
14	802-148C	HFSS 1/4-20X1/2 GR5	
15	802-282C	RHSNB 5/16-18X1 GR5	
16	803-013C	NUT LOCK 3/8-16 PLT	
17	803-019C	NUT LOCK 1/2-13 PLT	
18	803-024C	NUT LOCK 5/8-11 PLT	
19	803-043C	NUT HEX WHIZ 5/16-18 PLT	
20	803-169C	NUT HEX FLG LOCK 1/2-13 PLT	
21	803-230C	NUT HEX FLANGE 1/4-20 PLT	
22	803-316C	NUT HEX LOCK 1-8 PLT	
23	803-381C	NUT HEX JAM SLOTTED 1 1/4-7	
24	804-016C	WASHER FLAT 1/2 SAE PLT	
25	804-022C	WASHER LOCK SPRING 5/8 PLT	
26	804-029C	WASHER FLAT 1 SAE	
27	805-058C	PIN COTTER 3/16 X 2	
28	805-104C	PIN COTTER 3/16 X 1 1/2 PLT	
29	805-292C	PIN 1.0X4.42 USBL HRD PLT	
30	805-374C	PIN CLVS 1.0X2.06 USBL	
31	806-213C	U-BOLT 5/8-11 X 4 17/32 X 6	
32	807-271C	SPRING COMP 3.20OD .63W 5.5L	
33	815-433C	SPINDLE, SINGLE BOLT-ON 7/8-14	
34	818-055C	DECAL SLOW MOVING-GALV. BACKED	
35	827-158C	SLEEVE BEARING 1.25ID X 1.25	
36	890-153C	SMV MOUNTING BLADE	
37	890-401C	SMV MOUNTING SOCKET	
38	890-970C	BUSHING 1.25ODX1.00IDX2.87	
39	891-999C	BUSHING 1.50ODX1.25X3.93	S/N 1538169+
39	891-177C	BHG 1.50ODX1.25X1.38	S/N 1538168- (2 bushings required)

Axle Wing Standard

Applies to Models: RCBM6610 SERIES 2 S/N 944730+, RCB6610 SERIES 2 S/N 944730+

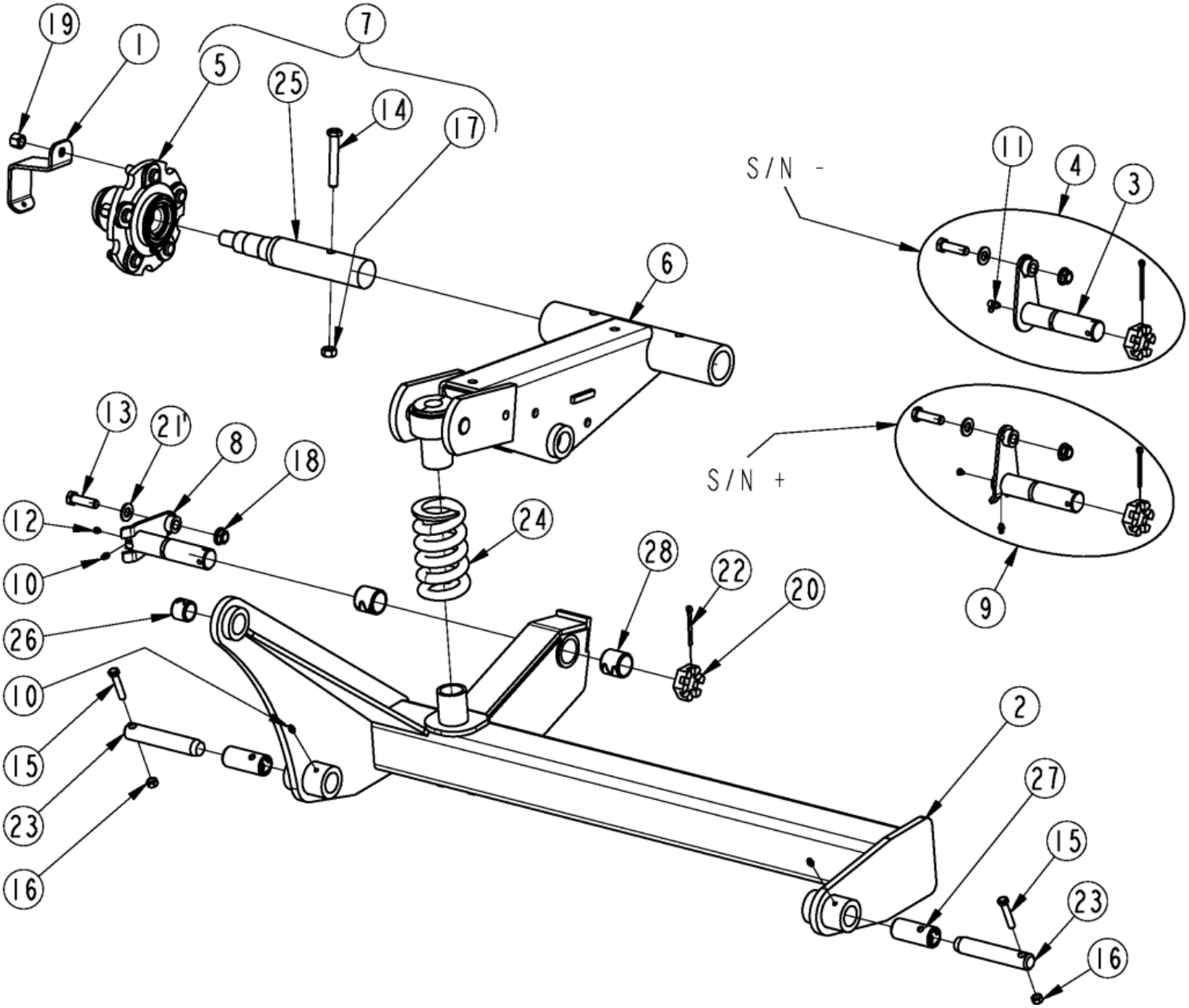

Axle Wing Standard

Applies to Models: RCBM6610 SERIES 2 S/N 944730+, RCB6610 SERIES 2 S/N 944730+

Ref.	Part No.	Part Description	Comments
	DWG 39131	Image No.	
1	330-331D	PROTECTOR DUST CAP	
2	330-503H	AXLE WING STD REP RH	
3	330-608H	PIVOT PIN TRAILING ARM WG	S/N1081238-
4	330-610S	ASY PIVOT PIN TRAIL ARM WG	S/N1081238-
5	330-938K	HUB 5 BOLT COMPLETE	
6	331-794H	TRAILING ARM WING	
7	331-795L	SPINDLE AND HUB ASSY	
8	334-464H	WING TRAILING ARM PIVOT PIN	S/N1081239+
9	334-466S	WING TRAILING ARM PIV PIN ASY	S/N1081239+
10	800-001C	GREASE ZERK STRAIGHT 1/4-28	
11	800-073C	GREASE ZERK 1/4-28 X 90-DEG	S/N1081238-
12	801-229C	SCREW SLOTTED HEX 1/4-28X3/16	S/N1081239+
13	802-082C	HHCS 1/2-13X1 3/4 GR5 FTHD	
14	802-099C	HHCS 1/2-13X3 1/4 GR5	
15	802-143C	HHCS 3/8-16X2 GR5	
16	803-013C	NUT LOCK 3/8-16 PLT	
17	803-019C	NUT LOCK 1/2-13 PLT	
18	803-169C	NUT HEX FLG LOCK 1/2-13 PLT	
19	803-310C	NUT HEX 1/2-20 X 5/8 HIGH	
20	803-381C	NUT HEX JAM SLOTTED 1 1/4-7	
21	804-016C	WASHER FLAT 1/2 SAE PLT	
22	805-058C	PIN COTTER 3/16 X 2	
23	805-292C	PIN 1.0X4.42 USBL HRD PLT	
24	807-271C	SPRING COMP 3.20OD .63W 5.5L	
25	815-491C	SINGLE AXLE SPINDLE, WING	
26	890-005C	BUSHING CYL 1 1/4 X 1 X 1	
27	890-970C	BUSHING 1.25ODX1.00IDX2.87	
28	891-177C	BHG 1.50ODX1.25X1.38	

Axle Wing Tandem

Applies to Models: RCBM6610 SERIES 2 S/N 944730+, RCB6610 SERIES 2 S/N 944730+

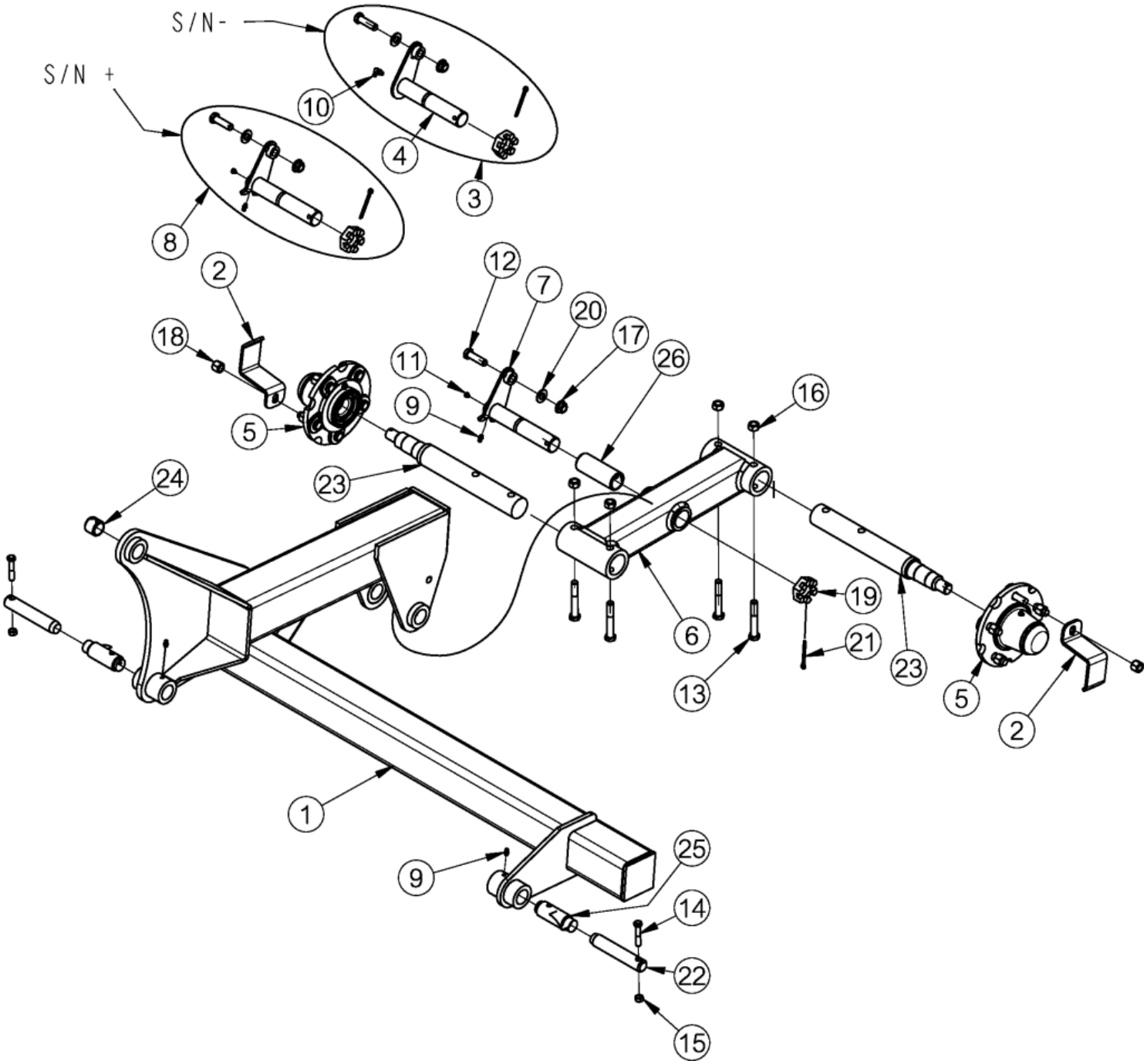

Axle Wing Tandem

Applies to Models: RCBM6610 SERIES 2 S/N 944730+, RCB6610 SERIES 2 S/N 944730+

Ref.	Part No.	Part Description	Comments
	DWG 39149	Image No.	
1	330-293H	AXLE RH TANDEM	
2	330-331D	PROTECTOR DUST CAP	
3	330-615S	ASY PIVOT PIN TANDEM ARM	S/N 1081238-
4	330-616H	PIVOT PIN TANDEM ARM	S/N 1081238-
5	330-938K	HUB 5 BOLT COMPLETE	
6	331-202H	TANDEM ARM, SHORT	
7	334-465H	WALKING TANDEM PIVOT PIN	S/N 1081239+
8	334-467S	WALKING TANDEM PIV PIN ASY	S/N 1081239+
9	800-001C	GREASE ZERK STRAIGHT 1/4-28	
10	800-073C	GREASE ZERK 1/4-28 X 90-DEG	S/N 1081238-
11	801-229C	SCREW SLOTTED HEX 1/4-28X3/16	S/N 1081239+
12	802-082C	HHCS 1/2-13X1 3/4 GR5 FTHD	
13	802-099C	HHCS 1/2-13X3 1/4 GR5	
14	802-143C	HHCS 3/8-16X2 GR5	
15	803-013C	NUT LOCK 3/8-16 PLT	
16	803-019C	NUT LOCK 1/2-13 PLT	
17	803-169C	NUT HEX FLG LOCK 1/2-13 PLT	
18	803-310C	NUT HEX 1/2-20 X 5/8 HIGH	
19	803-381C	NUT HEX JAM SLOTTED 1 1/4-7	
20	804-016C	WASHER FLAT 1/2 SAE PLT	
21	805-058C	PIN COTTER 3/16 X 2	
22	805-292C	PIN 1.0X4.42 USBL HRD PLT	
23	815-433C	SPINDLE, SINGLE BOLT-ON 7/8-14	
24	890-005C	BUSHING CYL 1 1/4 X 1 X 1	
25	890-970C	BUSHING 1.25ODX1.00IDX2.87	
26	891-999C	BUSHING 1.50ODX1.25X3.93	S/N 1538169+
26	891-177C	BHG 1.50ODX1.25X1.38	S/N 1538168-

HD Hub Kit (337-072K)

Applies to Models: RCBM6610 SERIES 2 S/N 944730+, RCB6610 SERIES 2 S/N 944730+

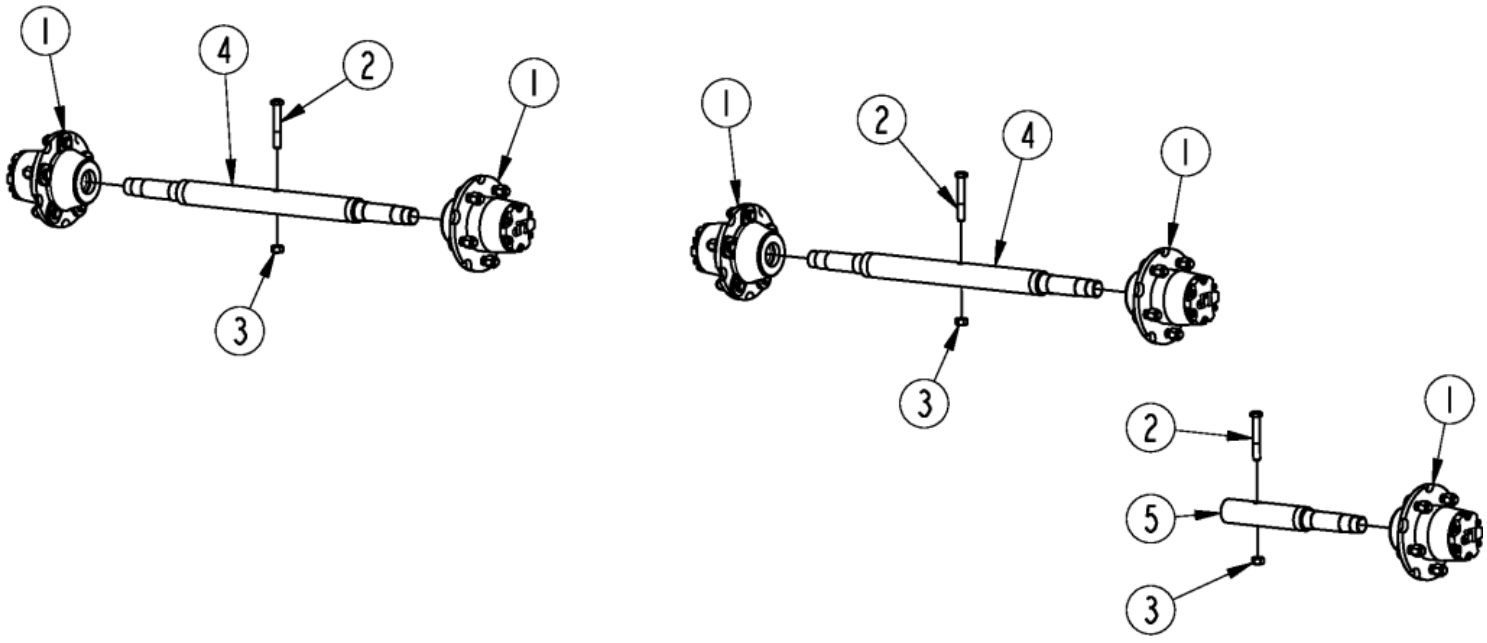

HD Hub Kit (337-072K)

Applies to Models: RCBM6610 SERIES 2 S/N 944730+, RCB6610 SERIES 2 S/N 944730+

Ref.	Part No.	Part Description	Comments
	DWG 76332	Image No.	
	337-072K	HD HUB STD AXLE SNG WING KIT *	For standard center axle, tandem center axle and standard wing axle.
1	337-067S	HEAVY 5 BOLT HUB	
2	802-099C	HHCS 1/2-13X3 1/4 GR5	
3	803-019C	NUT LOCK 1/2-13 PLT	
4	815-616C	HD HUB SPINDLE, DUAL BOLT-ON	
5	815-618C	HD HUB SPINDLE, WING	

HD Hub Kit (337-073K)

Applies to Models: RCBM6610 SERIES 2 S/N 944730+, RCB6610 SERIES 2 S/N 944730+

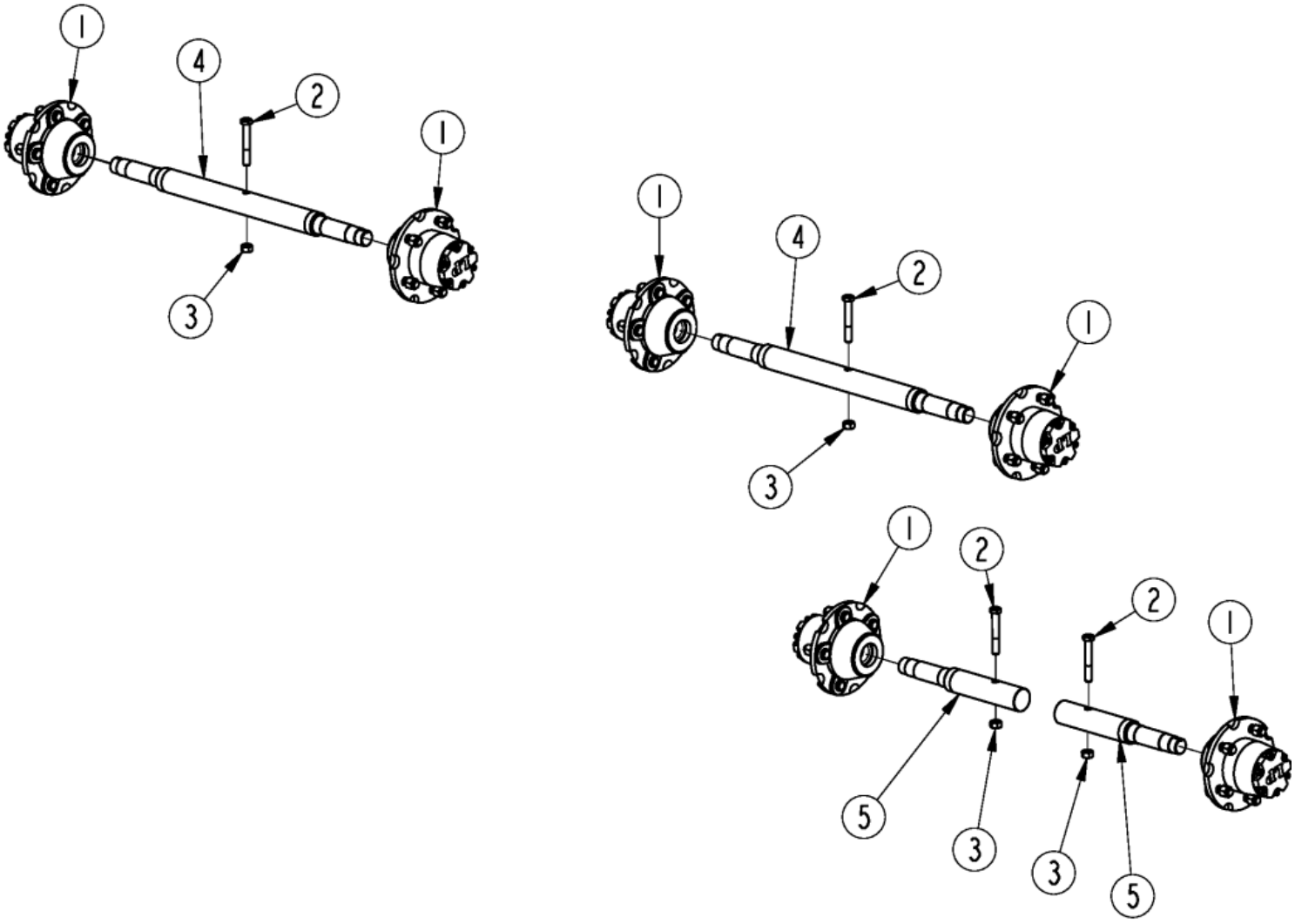

HD Hub Kit (337-073K)

Applies to Models: RCBM6610 SERIES 2 S/N 944730+, RCB6610 SERIES 2 S/N 944730+

Ref.	Part No.	Part Description	Comments
	DWG 76334	Image No.	
	337-073K	HD HUB STD AXLE DUAL WING KIT *	For standard center axle, tandem center axle and standard wing axle.
1	337-067S	HEAVY 5 BOLT HUB	
2	802-099C	HHCS 1/2-13X3 1/4 GR5	
3	803-019C	NUT LOCK 1/2-13 PLT	
4	815-616C	HD HUB SPINDLE, DUAL BOLT-ON	
5	815-618C	HD HUB SPINDLE, WING	

HD Hub Kit (337-074K)

Applies to Models: RCBM6610 SERIES 2 S/N 944730+, RCB6610 SERIES 2 S/N 944730+

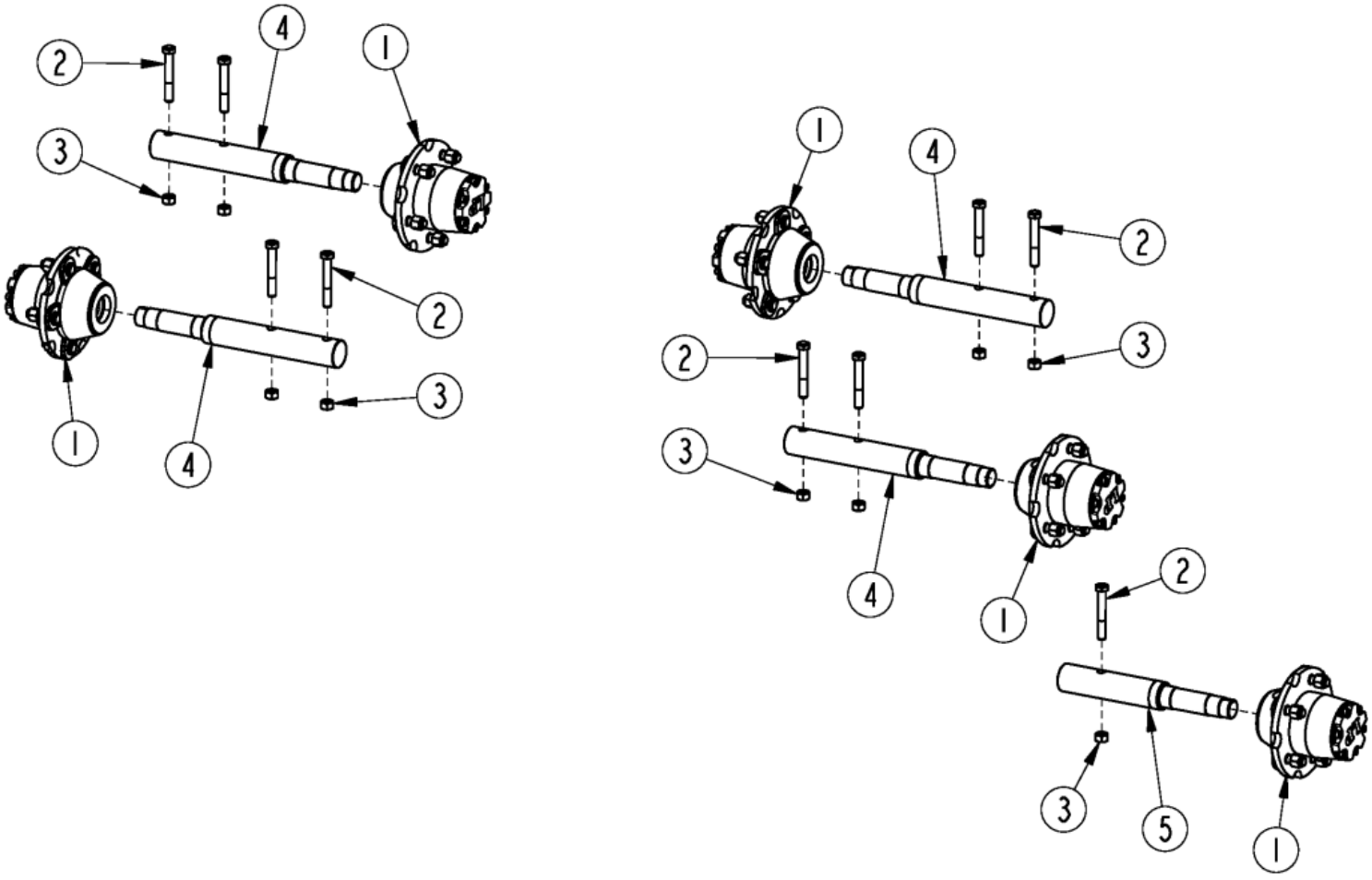

HD Hub Kit (337-074K)

Applies to Models: RCBM6610 SERIES 2 S/N 944730+, RCB6610 SERIES 2 S/N 944730+

Ref.	Part No.	Part Description	Comments
	DWG 76335	Image No.	
	337-074K	HD HUB TAN AXLE SNG WING KIT *	For standard center axle, tandem center axle and standard wing axle.
1	337-067S	HEAVY 5 BOLT HUB	
2	802-099C	HHCS 1/2-13X3 1/4 GR5	
3	803-019C	NUT LOCK 1/2-13 PLT	
4	815-617C	HD HUB SPINDLE, SINGLE BOLT-ON	
5	815-618C	HD HUB SPINDLE, WING	

HD Hub Kit (337-075K)

Applies to Models: RCBM6610 SERIES 2 S/N 944730+, RCB6610 SERIES 2 S/N 944730+

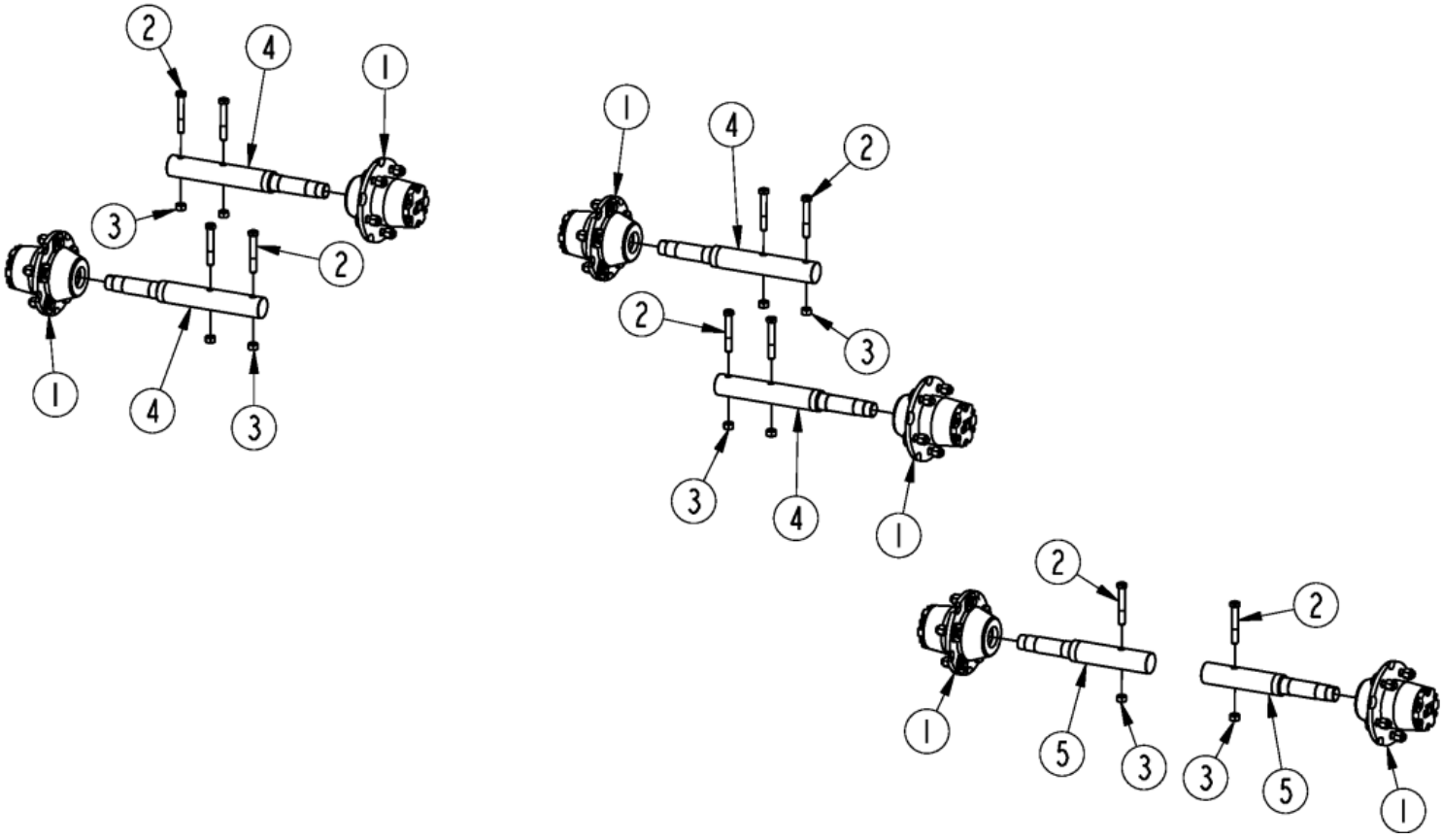

HD Hub Kit (337-075K)

Applies to Models: RCBM6610 SERIES 2 S/N 944730+, RCB6610 SERIES 2 S/N 944730+

Ref.	Part No.	Part Description	Comments
	DWG 76337	Image No.	
	337-075K	HD HUB TAN AXLE DUAL WING KIT *	For standard center axle, tandem center axle and standard wing axle.
1	337-067S	HEAVY 5 BOLT HUB	
2	802-099C	HHCS 1/2-13X3 1/4 GR5	
3	803-019C	NUT LOCK 1/2-13 PLT	
4	815-617C	HD HUB SPINDLE, SINGLE BOLT-ON	
5	815-618C	HD HUB SPINDLE, WING	

Hub Assembly (330-938K)

Applies to Models: RCBM6610 SERIES 2 S/N 944730+, RCB6610 SERIES 2 S/N 944730+

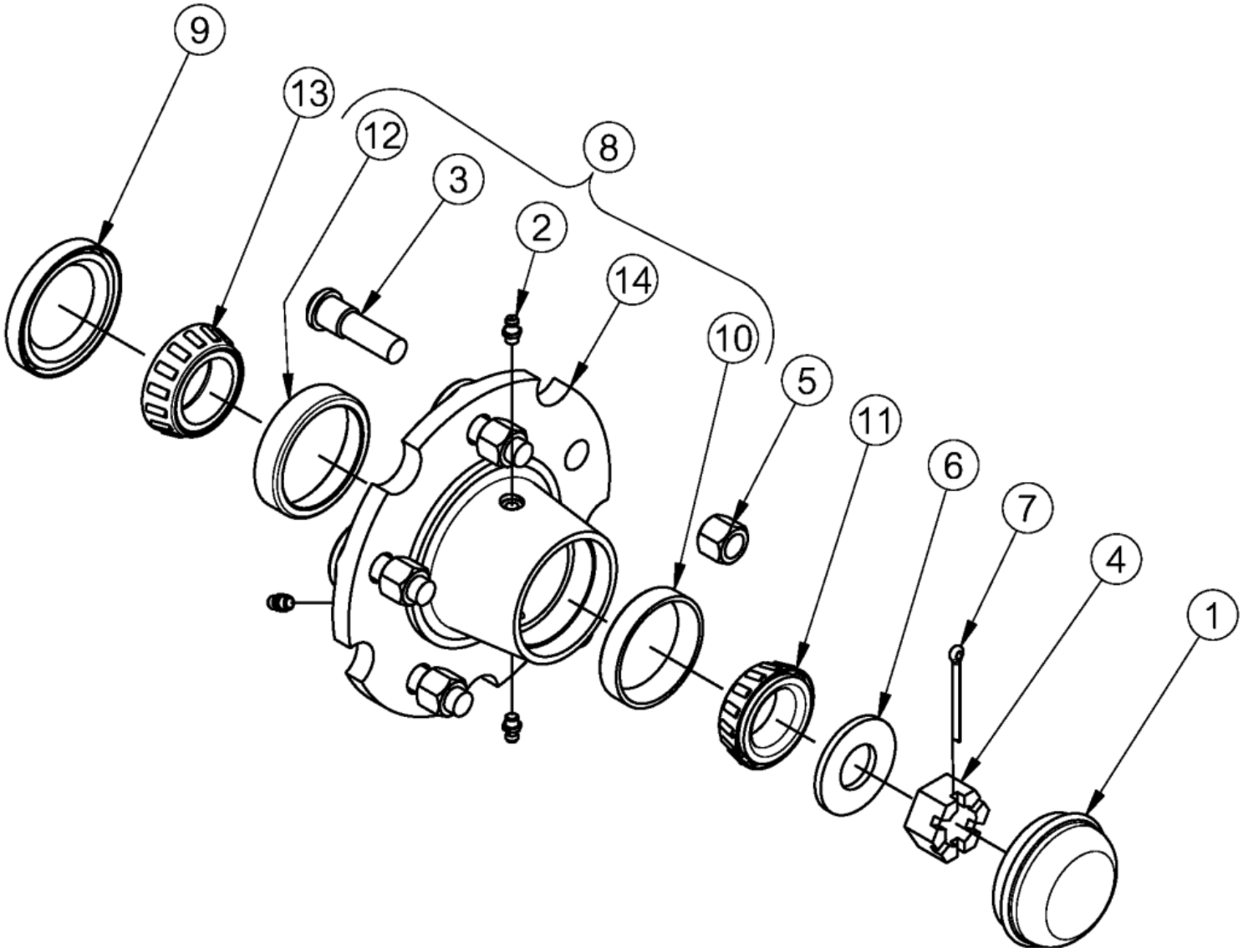

Hub Assembly (330-938K)

Applies to Models: RCBM6610 SERIES 2 S/N 944730+, RCB6610 SERIES 2 S/N 944730+

Ref.	Part No.	Part Description	Comments
	DWG 37676	Image No.	
	330-938K	HUB 5 BOLT COMPLETE *	Complete assembly
1	200-001D	HUB GREASE CAP	
2	800-080C	GREASE ZERK 1/4-28 THD FORMING	
3	802-779C	HUB STUD 1/2-20X1.88 GR5	
4	803-029C	NUT HEX SLOTTED 7/8-14 PLT	
5	803-310C	NUT HEX 1/2-20 X 5/8 HIGH	
6	804-055C	WASHER SPINDLE - 7/8	
7	805-246C	PIN COTTER 5/32 X 1 3/4 LG	
8	815-243C	HUB 5-BOLT W/CUPS/STUDS	
9	816-497C	SEAL 1.75ID CR17617	
10	822-020C	BRG CUP LM-67010	
11	822-021C	BRG CONE 1.25ID LM-67048	
12	822-033C	BRG CUP LM-48510	
13	822-034C	BRG CONE LM-48548	
14	815-242C	HUB 5-BOLT CASTING	

Applies to Models: RCBM6610 SERIES 2 S/N 944730+, RCB6610 SERIES 2 S/N 944730+

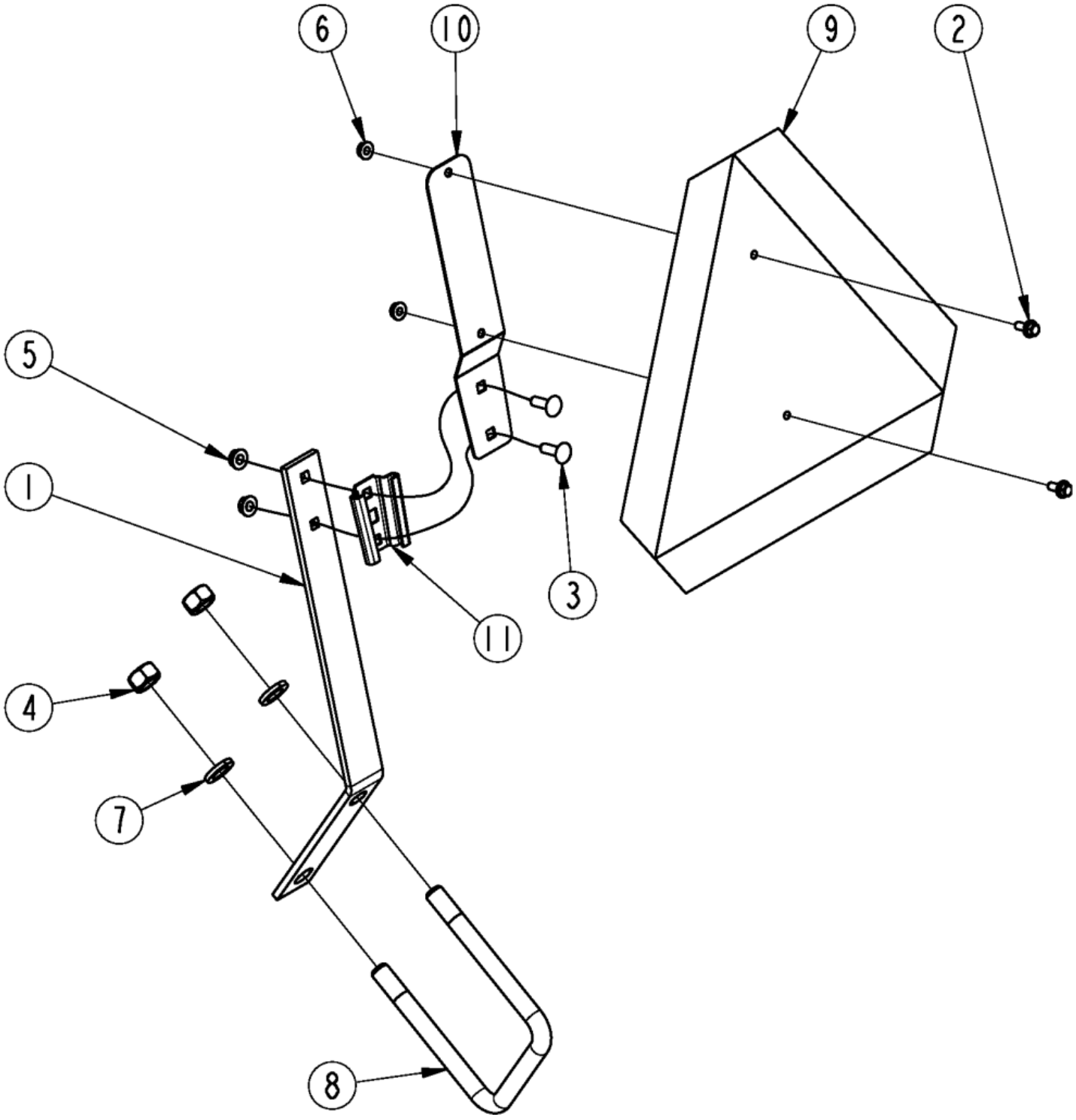

SMV

Applies to Models: RCBM6610 SERIES 2 S/N 944730+, RCB6610 SERIES 2 S/N 944730+

Ref.	Part No.	Part Description	Comments
	DWG 39133	Image No.	
	331-646S	SMV ASSY	
1	331-133D	SMV MOUNT	
2	802-196C	HFS 1/4-20X5/8 GR5	
3	802-282C	RHSNB 5/16-18X1 GR5	
4	803-024C	NUT LOCK 5/8-11 PLT	
5	803-043C	NUT HEX WHIZ 5/16-18 PLT	
6	803-230C	NUT HEX FLANGE 1/4-20 PLT	
7	804-022C	WASHER LOCK SPRING 5/8 PLT	
8	806-213C	U-BOLT 5/8-11 X 4 17/32 X 6	
9	818-055C	DECAL SLOW MOVING-GALV. BACKED	
10	890-153C	SMV MOUNTING BLADE	
11	890-401C	SMV MOUNTING SOCKET	

Guards Chain Double Row Front

Applies to Models: RCBM6610 SERIES 2 S/N 944730+, RCB6610 SERIES 2 S/N 944730+

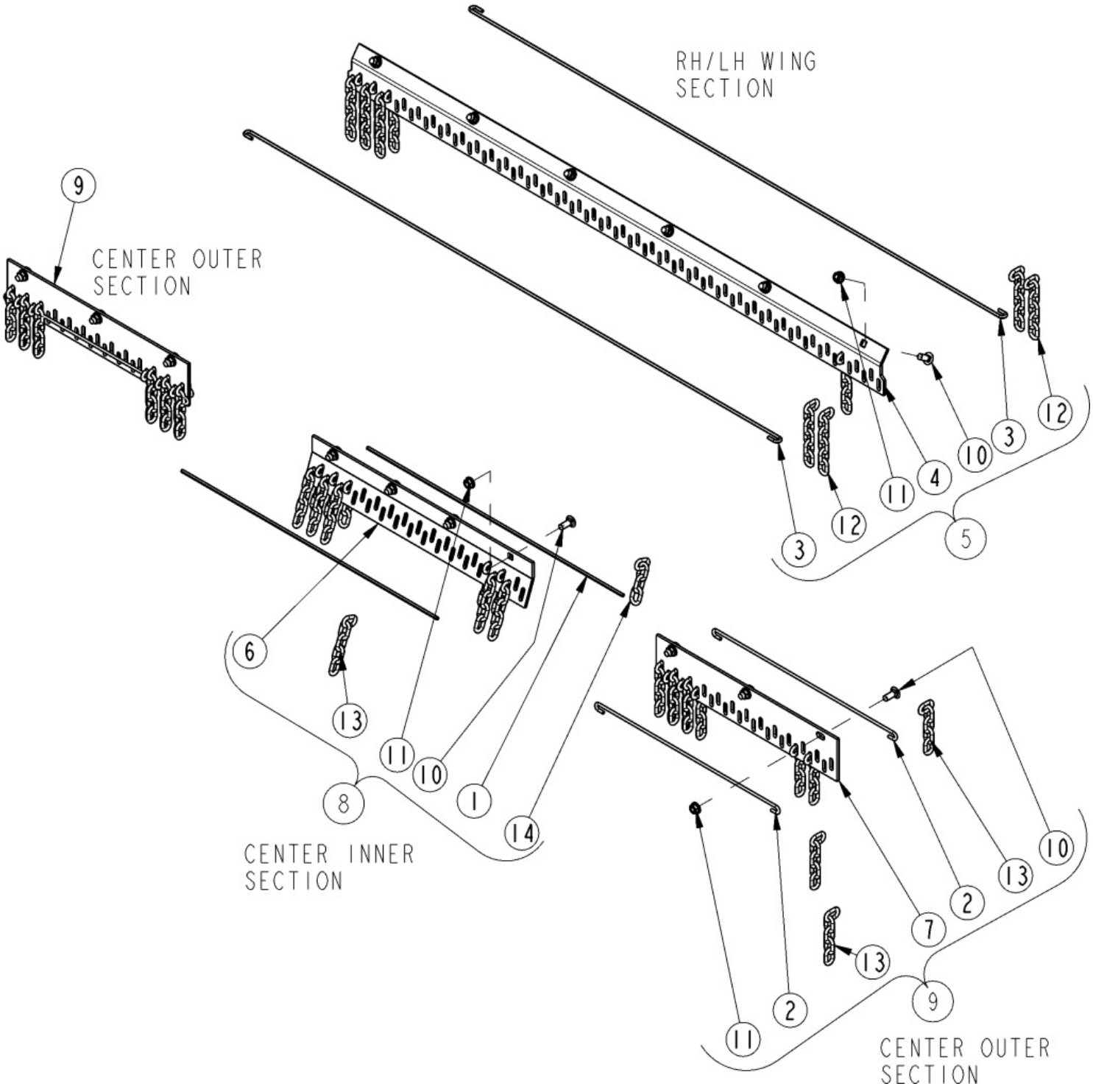

Guards Chain Double Row Front

Applies to Models: RCBM6610 SERIES 2 S/N 944730+, RCB6610 SERIES 2 S/N 944730+

Ref.	Part No.	Part Description	Comments
	DWG26545	Drawing Image Number	
	330-514A	CHAINGUARD DBL FRT 1WG *	
1	326-099D	ROUND ROD 1/4 X 32	
1	318-107D	RPBY 326-099D	Obsolete
2	318-337D	ROUND ROD 1/4 X 25	
3	318-617D	ROUND ROD .25 X 68.50	
4	318-636D	CHAINGUARD, DBL FR WING	
5	318-707K	CHAINGUARD, DBL FRT WING	
6	318-932D	CHAINGUARD DBL FRT CTR INNER	
7	318-966D	CHNGRD, DBL FRT CTR OUTER	
8	330-238K	CHNGRD DBL FRT CTR INNER	
9	330-274K	CHNGRD DBL FRT CTR OUTER	
10	802-214C	RHSNB 1/2-13X1 1/4 GR5	
11	803-037C	NUT HEX WHIZ 1/2-13 PLT GR5	
12	890-175C	CHAIN 5/16 GR 43 X 6 LINKS PLT	
13	890-341C	CHAIN WELD 5/16 GR 43 X 5 LINK	
14	890-400C	CHAIN WELD 5/16 GR 43 X 4 LINK	

Guards Chain Double Row Rear

Applies to Models: RCBM6610 SERIES 2 S/N 944730+, RCB6610 SERIES 2 S/N 944730+

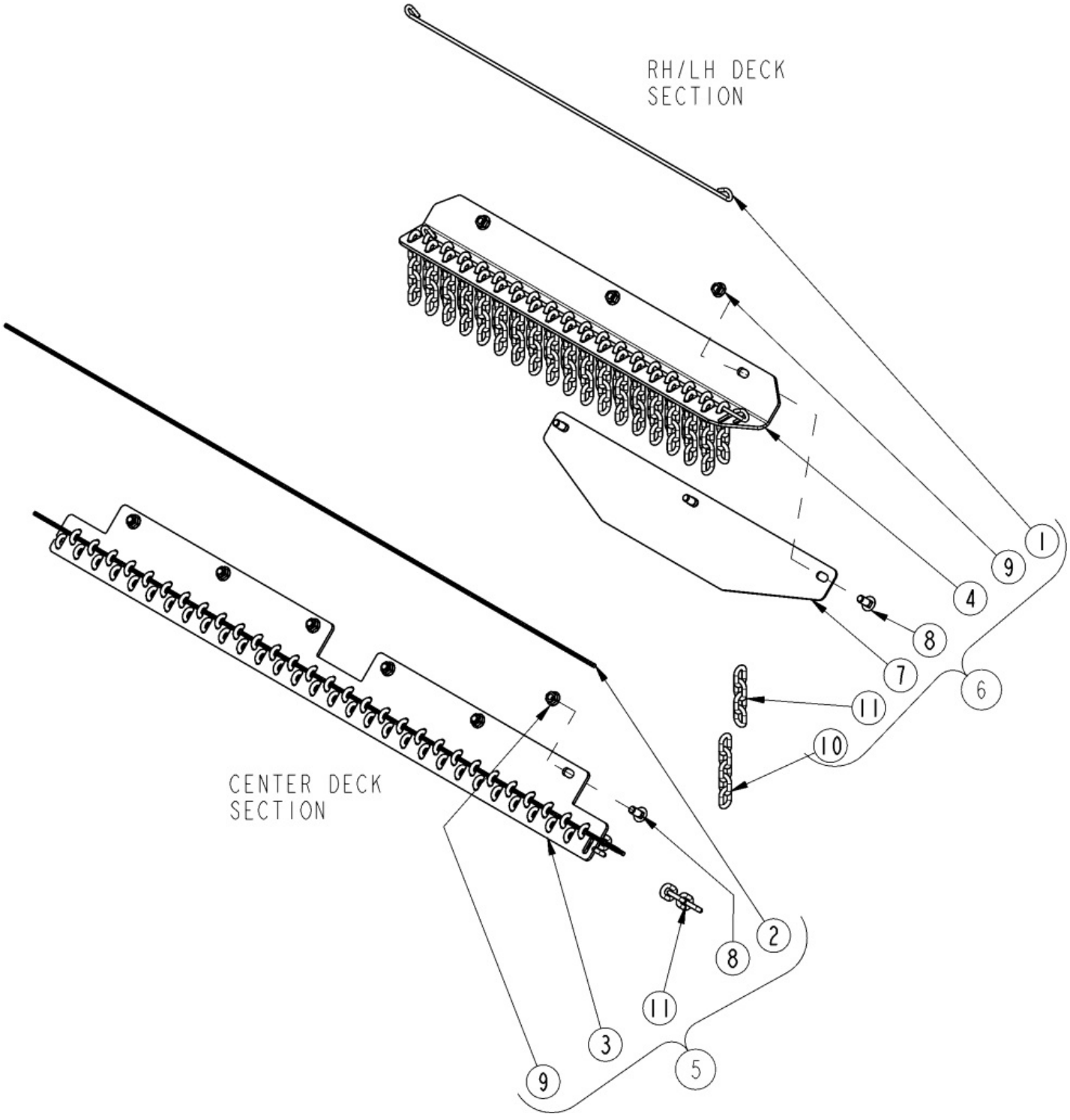

Guards Chain Double Row Rear

Applies to Models: RCBM6610 SERIES 2 S/N 944730+, RCB6610 SERIES 2 S/N 944730+

Ref.	Part No.	Part Description	Comments
	DWG26547	Drawing Image Number	
	330-526A	CHAINGUARD DBL REAR 1WG *	
1	326-535D	ROUND ROD 1/4 X 37 3/4	
1	318-108D	RPBY 326-535D	Obsolete
2	318-478D	ROUND ROD .25 X 59	
3	318-930D	CHAINGUARD DBL REAR CTR	
4	330-051D	CHNGRD DBL REAR WING RH	
5	330-235K	CHNGRD DBL REAR CTR	
6	330-450K	CHNGRD DBL REAR WING RH	
7	330-597D	CHAIN REV. DEFLECTOR REAR WING	
8	802-214C	RHSNB 1/2-13X1 1/4 GR5	
9	803-037C	NUT HEX WHIZ 1/2-13 PLT GR5	
10	890-341C	CHAIN WELD 5/16 GR 43 X 5 LINK	
11	890-400C	CHAIN WELD 5/16 GR 43 X 4 LINK	

Guards Chain Single Row Front

Applies to Models: RCBM6610 SERIES 2 S/N 944730+, RCB6610 SERIES 2 S/N 944730+

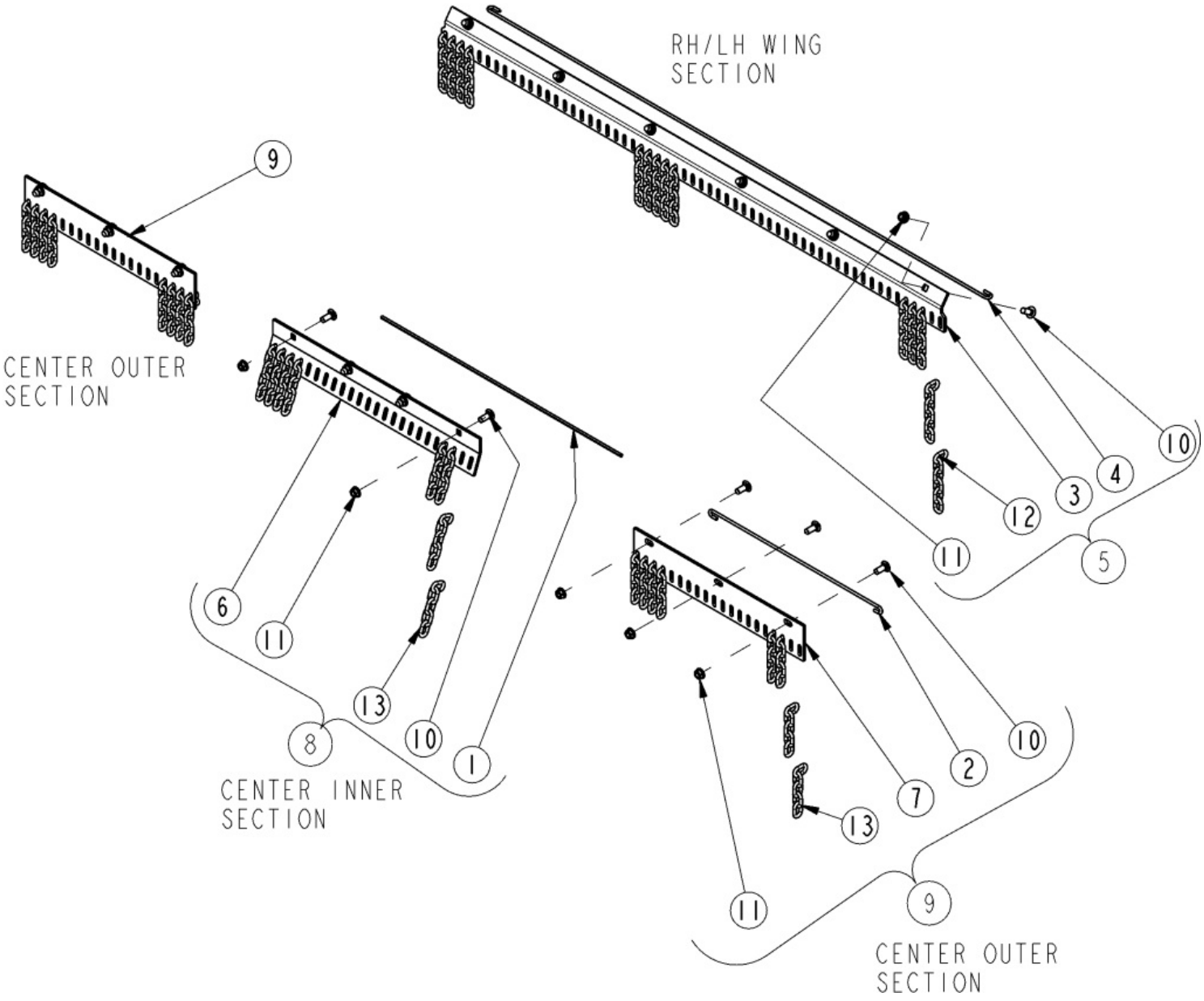

Guards Chain Single Row Front

Applies to Models: RCBM6610 SERIES 2 S/N 944730+, RCB6610 SERIES 2 S/N 944730+

Ref.	Part No.	Part Description	Comments
	DWG26543	Drawing Image Number	
	330-512A	CHAINGUARD SGL FRT 1WG *	
1	326-099D	ROUND ROD 1/4 X 32	
1	318-107D	RPBY 326-099D	Obsolete
2	318-337D	ROUND ROD 1/4 X 25	
3	318-606D	CHAINGUARD, SGL FR WING	
4	318-617D	ROUND ROD .25 X 68.50	
5	318-620K	CHAINGUARD, SGL FRT WING	
6	318-931D	CHAINGUARD SGL FRT CTR INNER	
7	318-965D	CHNGRD, SGL FRT CTR OUTER	
8	330-237K	CHNGRD SGL FRT CTR INNER	
9	330-273K	CHNGRD SGL FRT CTR OUTER	
10	802-214C	RHSNB 1/2-13X1 1/4 GR5	
11	803-037C	NUT HEX WHIZ 1/2-13 PLT GR5	
12	890-175C	CHAIN 5/16 GR 43 X 6 LINKS PLT	
13	890-341C	CHAIN WELD 5/16 GR 43 X 5 LINK	

Guards Chain Single Row Rear

Applies to Models: RCBM6610 SERIES 2 S/N 944730+, RCB6610 SERIES 2 S/N 944730+

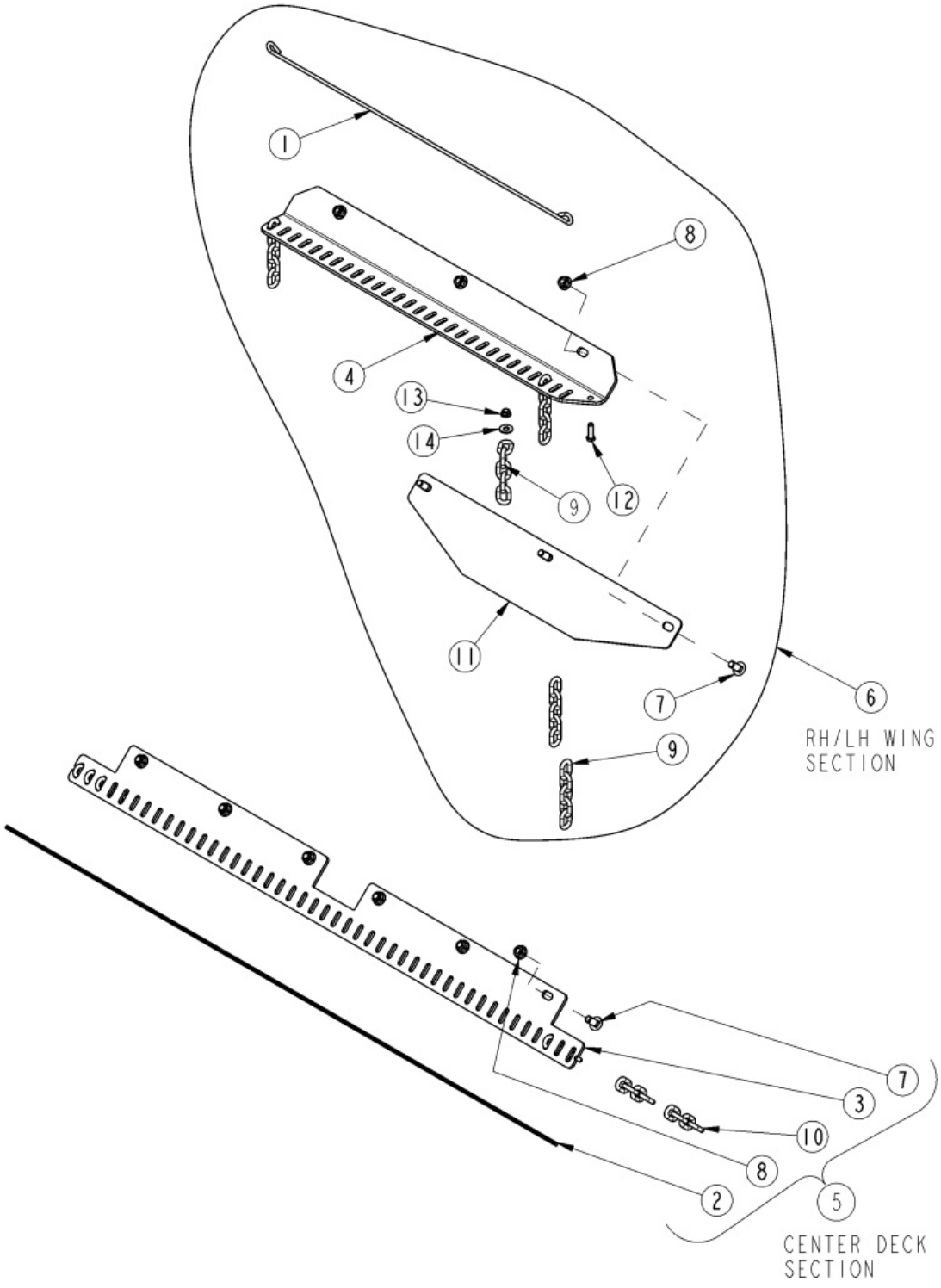

Guards Chain Single Row Rear

Applies to Models: RCBM6610 SERIES 2 S/N 944730+, RCB6610 SERIES 2 S/N 944730+

Ref.	Part No.	Part Description	Comments
	DWG 26544	Drawing Image Number	
	330-524A	CHAINGUARD SGL REAR 1WG *	
1	326-535D	ROUND ROD 1/4 X 37 3/4	
1	318-108D	RPBY 326-535D	Obsolete
2	318-478D	ROUND ROD .25 X 59	
3	318-929D	CHAINGUARD SGL REAR CTR	
4	330-050D	CHNGRD SGL REAR WING RH	
5	330-234K	CHNGRD SGL REAR CTR	
6	330-449K	CHNGRD SGL REAR WING RH	
7	802-214C	RHSNB 1/2-13X1 1/4 GR5	
8	803-037C	NUT HEX WHIZ 1/2-13 PLT GR5	
9	890-341C	CHAIN WELD 5/16 GR 43 X 5 LINK	
10	890-400C	CHAIN WELD 5/16 GR 43 X 4 LINK	
11	330-597D	CHAIN REV. DEFLECTOR REAR WING	
12	802-079C	HHCS 3/8-16X1 1/4 GR5	
13	803-209C	NUT FLANGE LOCK 3/8-16 PLT	
14	804-011C	WASHER FLAT 3/8 USS PLT	

Guards Chain W/ Cable Front

Applies to Models: RCBM6610 SERIES 2 S/N 944730+, RCB6610 SERIES 2 S/N 944730+

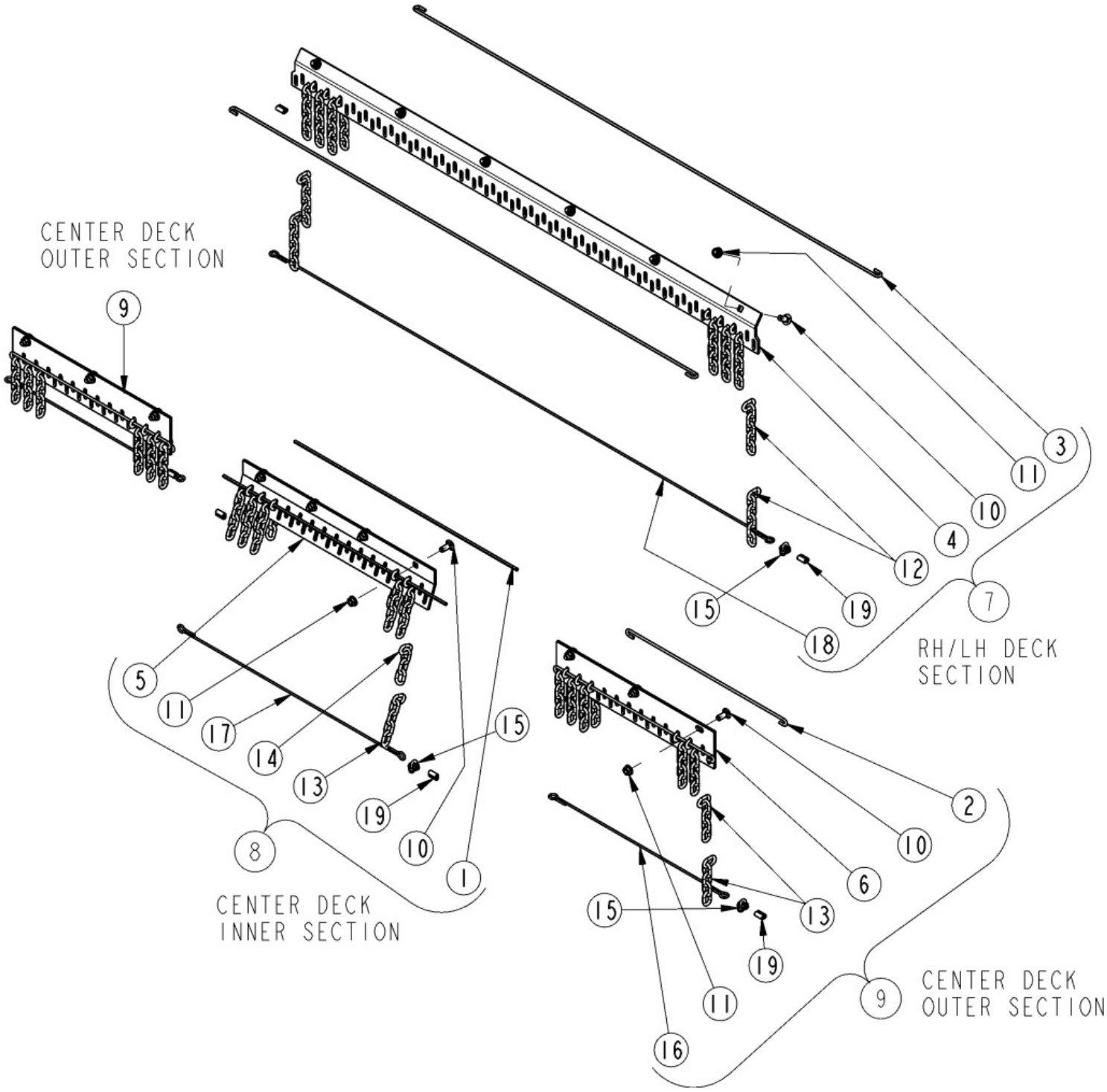

Guards Chain W/ Cable Front

Applies to Models: RCBM6610 SERIES 2 S/N 944730+, RCB6610 SERIES 2 S/N 944730+

Ref.	Part No.	Part Description	Comments
	DWG26548	Drawing Image Number	
	330-515A	CHAINGUARD CBL FRT 1WG *	
1	326-099D	ROUND ROD 1/4 X 32	
1	318-107D	RPBY 326-099D	Obsolete
2	318-337D	ROUND ROD 1/4 X 25	
3	318-617D	ROUND ROD .25 X 68.50	
4	318-636D	CHAINGUARD, DBL FR WING	
5	318-932D	CHAINGUARD DBL FRT CTR INNER	
6	318-966D	CHNGRD, DBL FRT CTR OUTER	
7	330-155K	CHAINGUARD, FRT CBL WING	
8	330-239K	CHNGRD CBL FRT CTR INNER	
9	330-275K	CHNGRD CBL FRT CTR OUTER	
10	802-214C	RHSNB 1/2-13X1 1/4 GR5	
11	803-037C	NUT HEX WHIZ 1/2-13 PLT GR5	
12	890-175C	CHAIN 5/16 GR 43 X 6 LINKS PLT	
13	890-341C	CHAIN WELD 5/16 GR 43 X 5 LINK	
14	890-400C	CHAIN WELD 5/16 GR 43 X 4 LINK	
15	890-672C	U-BOLT WIRE ROPE CLP 3/16 GAL.	Alternate
16	990-208R	AIRCRAFT CBL.3/16 7X7 GALV.	5' Required
17	990-208R	AIRCRAFT CBL.3/16 7X7 GALV.	6' Required
18	990-208R	AIRCRAFT CBL.3/16 7X7 GALV.	2' Required
19	891-236C	SWAGE CLAMP, 3/16 CABLE	Or Use 890-672C

Guards Chain W/ Cable Rear

Applies to Models: RCBM6610 SERIES 2 S/N 944730+, RCB6610 SERIES 2 S/N 944730+

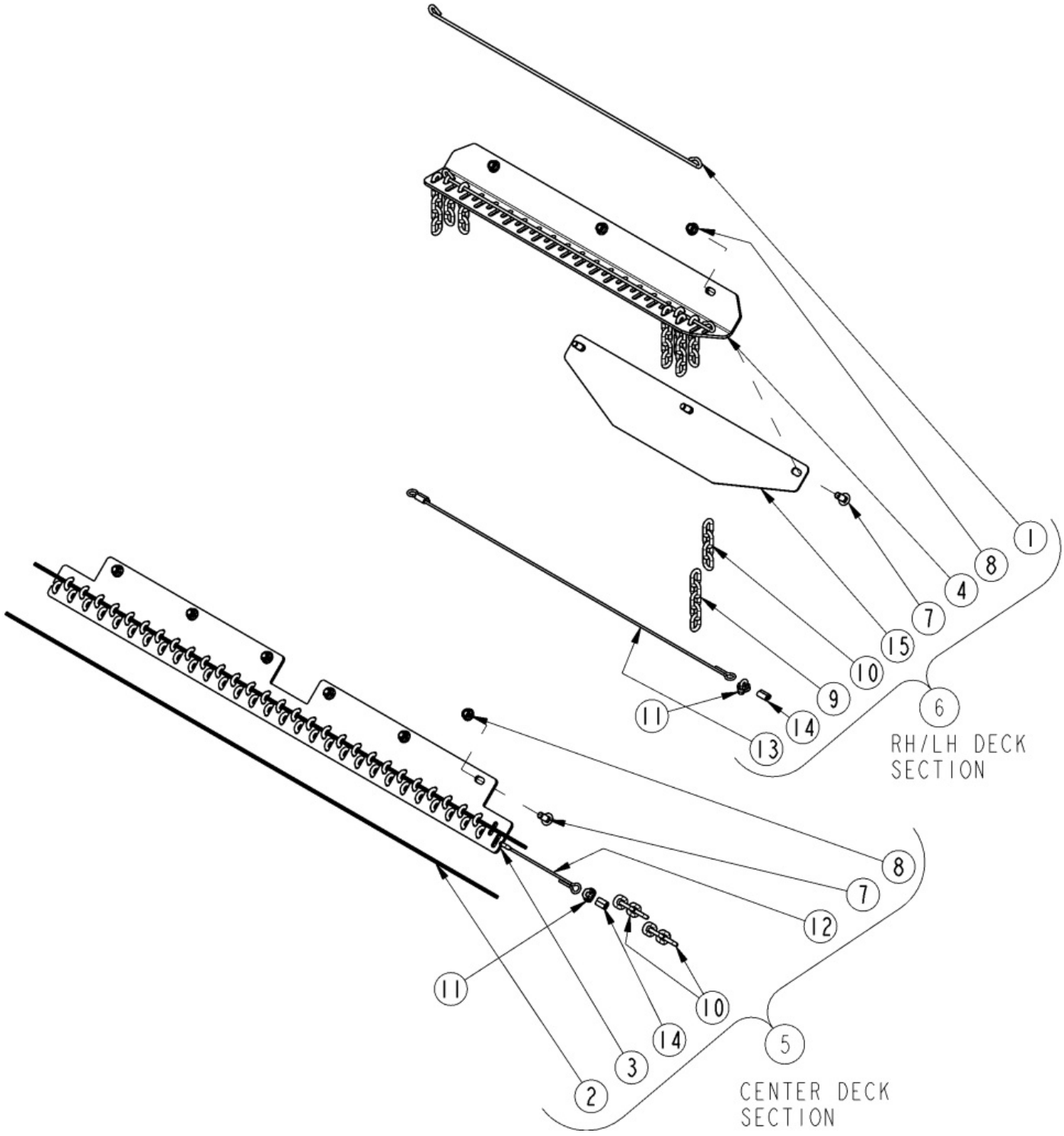

Guards Chain W/ Cable Rear

Applies to Models: RCBM6610 SERIES 2 S/N 944730+, RCB6610 SERIES 2 S/N 944730+

Ref.	Part No.	Part Description	Comments
	DWG26549	Drawing Image Number	
	330-527A	CHAINGUARD CBL REAR 1WG *	
1	326-535D	ROUND ROD 1/4 X 37 3/4	
1	318-108D	RPBY 326-535D	Obsolete
2	318-478D	ROUND ROD .25 X 59	
3	318-930D	CHAINGUARD DBL REAR CTR	
4	330-051D	CHNGRD DBL REAR WING RH	
5	330-236K	CHNGRD CBL REAR CTR	
6	330-451K	CHNGRD CBL REAR WING RH	
7	802-214C	RHSNB 1/2-13X1 1/4 GR5	
8	803-037C	NUT HEX WHIZ 1/2-13 PLT GR5	
9	890-341C	CHAIN WELD 5/16 GR 43 X 5 LINK	
10	890-400C	CHAIN WELD 5/16 GR 43 X 4 LINK	
11	890-672C	U-BOLT WIRE ROPE CLP 3/16 GAL.	Alternate to 891-236C
12	990-208R	AIRCRAFT CBL.3/16 7X7 GALV.	9' Required
13	990-208R	AIRCRAFT CBL.3/16 7X7 GALV.	6' Required
14	891-236C	SWAGE CLAMP, 3/16 CABLE	Or Use 890-672C
15	330-597D	CHAIN REV. DEFLECTOR REAR WING	

Guards Rubber Front

Applies to Models: RCBM6610 SERIES 2 S/N 944730+, RCB6610 SERIES 2 S/N 944730+

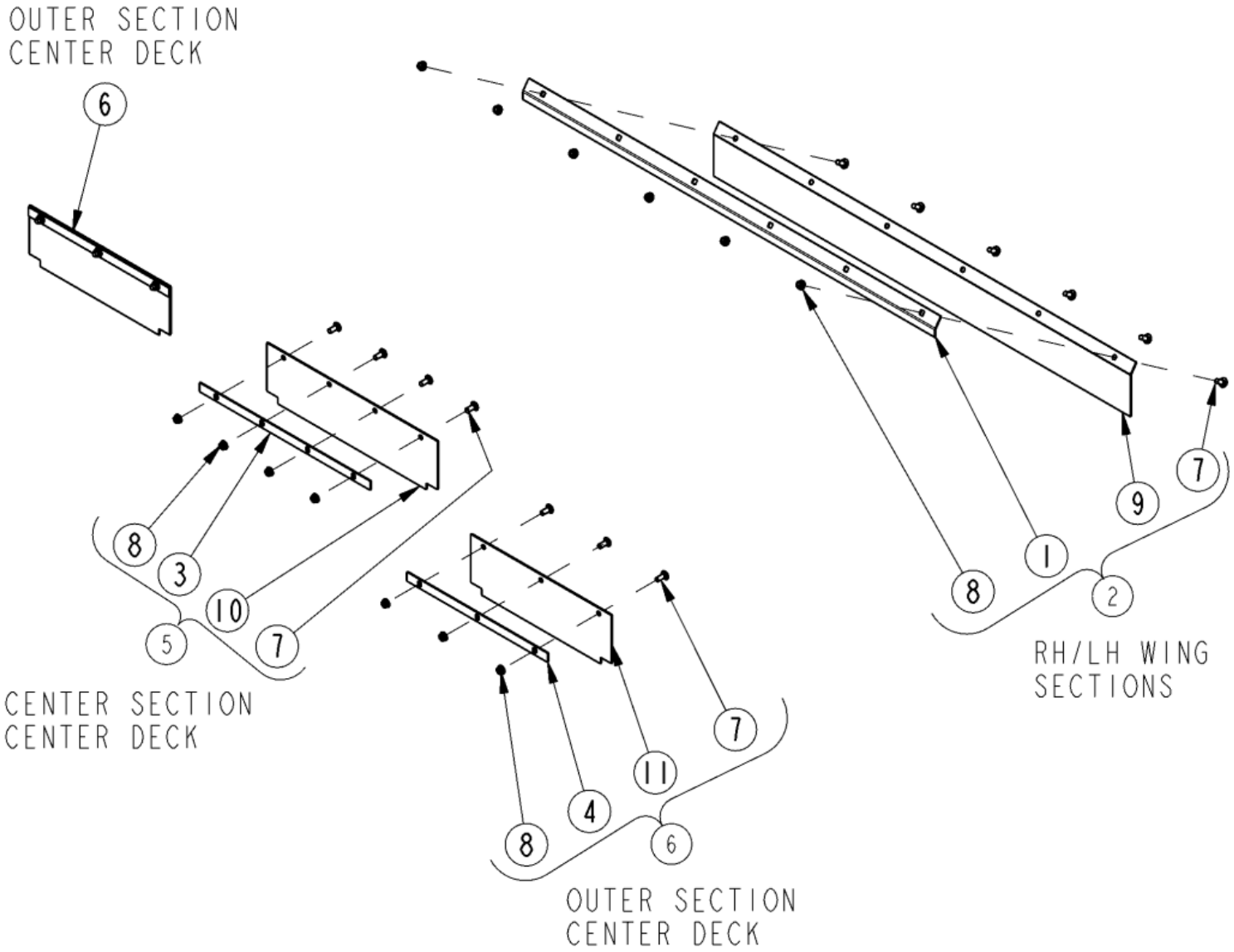

Guards Rubber Front

Applies to Models: RCBM6610 SERIES 2 S/N 944730+, RCB6610 SERIES 2 S/N 944730+

Ref.	Part No.	Part Description	Comments
	DWG26541	Drawing Image Number	
	330-513A	RUBBERGUARD FRT 1WG *	
1	318-657D	FORMED SUPPORT BAND	
2	318-728K	RUBBERGUARD, FRT WING	
3	318-917D	FLAT SUPPORT BAND	
4	318-918D	FLAT SUPPORT BAND	
5	330-316K	RUBBERGUARD FRT CNTR INNER	
6	330-317K	RUBBERGUARD FRT CNTR OUTER	
7	802-214C	RHSNB 1/2-13X1 1/4 GR5	
8	803-037C	NUT HEX WHIZ 1/2-13 PLT GR5	
9	816-456C	FRONT WING RUBBER GUARD	
10	816-606C	RUBBER GUARD FRT CNTR	
11	816-607C	RUBBER GUARD FRT CNTR OUT	

Guards Rubber Rear

Applies to Models: RCBM6610 SERIES 2 S/N 944730+, RCB6610 SERIES 2 S/N 944730+

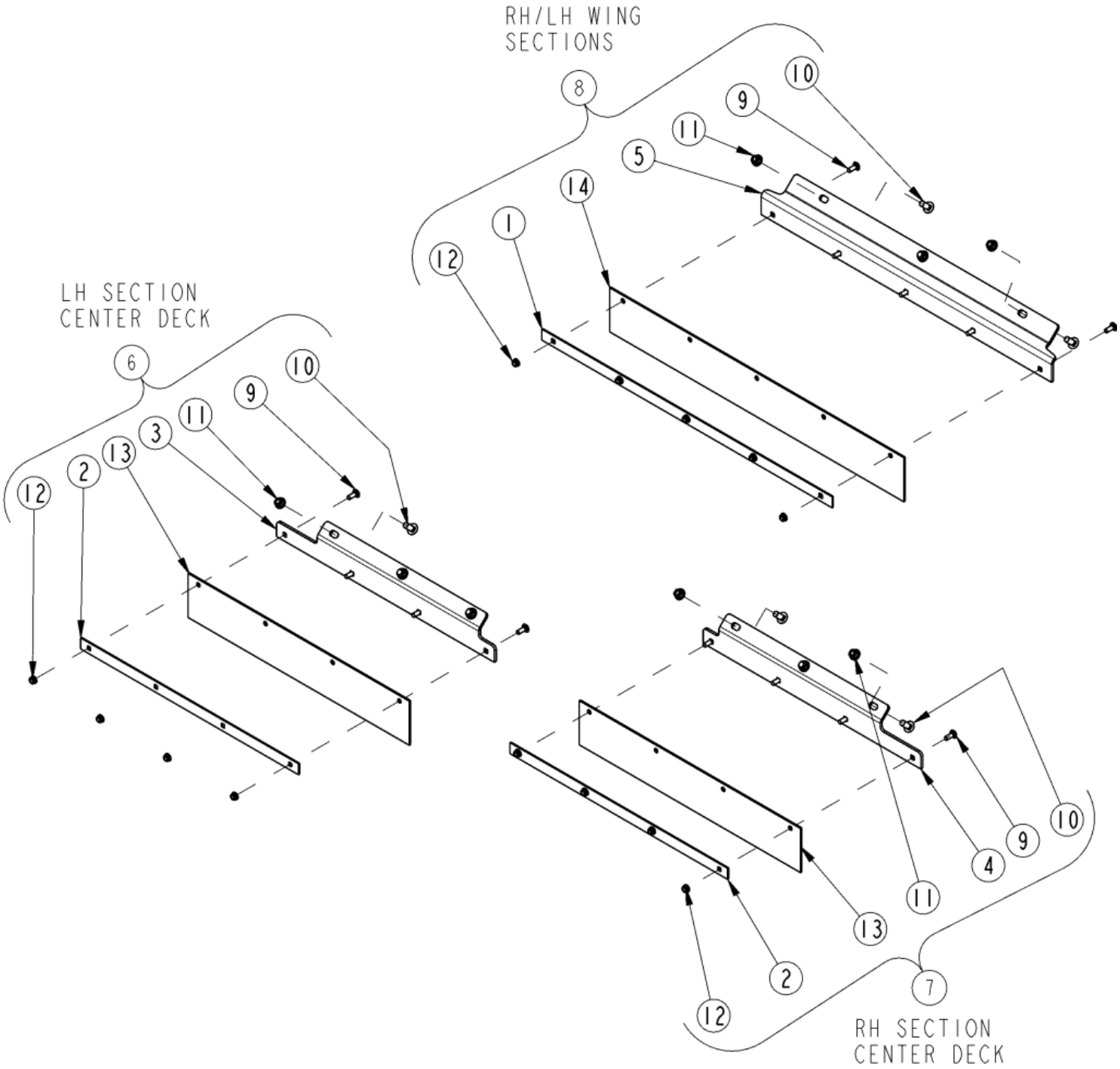

Guards Rubber Rear

Applies to Models: RCBM6610 SERIES 2 S/N 944730+, RCB6610 SERIES 2 S/N 944730+

Ref.	Part No.	Part Description	Comments
	DWG26542	Drawing Image Number	
	330-525A	RUBBERGUARD REAR 1WG *	
1	318-000D	FLAT SUPPORT BAND	
2	318-129D	RUBBER GUARD FLAT BRKT. 28 1/2	
3	318-924D	MOUNT RBBRGRD CNTR LH	
4	318-925D	MOUNT RBBRGRD CNTR RH	
5	318-952D	MOUNT RBBRGRD WING REAR	
6	330-318K	RUBBERGUARD REAR CNTR LH	
7	330-319K	RUBBERGUARD REAR CNTR RH	
8	330-320K	RUBBERGUARD REAR WING	
9	802-015C	RHSNB 3/8-16X1 GR5	
10	802-214C	RHSNB 1/2-13X1 1/4 GR5	
11	803-037C	NUT HEX WHIZ 1/2-13 PLT GR5	
12	803-198C	NUT HEX WHIZ 3/8-16 PLT	
13	816-246C	RUBBER GUARD REAR WING	
14	816-608C	RUBBERGUARD REAR	

Driveline (826-112C) Walterscheid

Applies to Models: RCB6610 SERIES 2 S/N 944730+

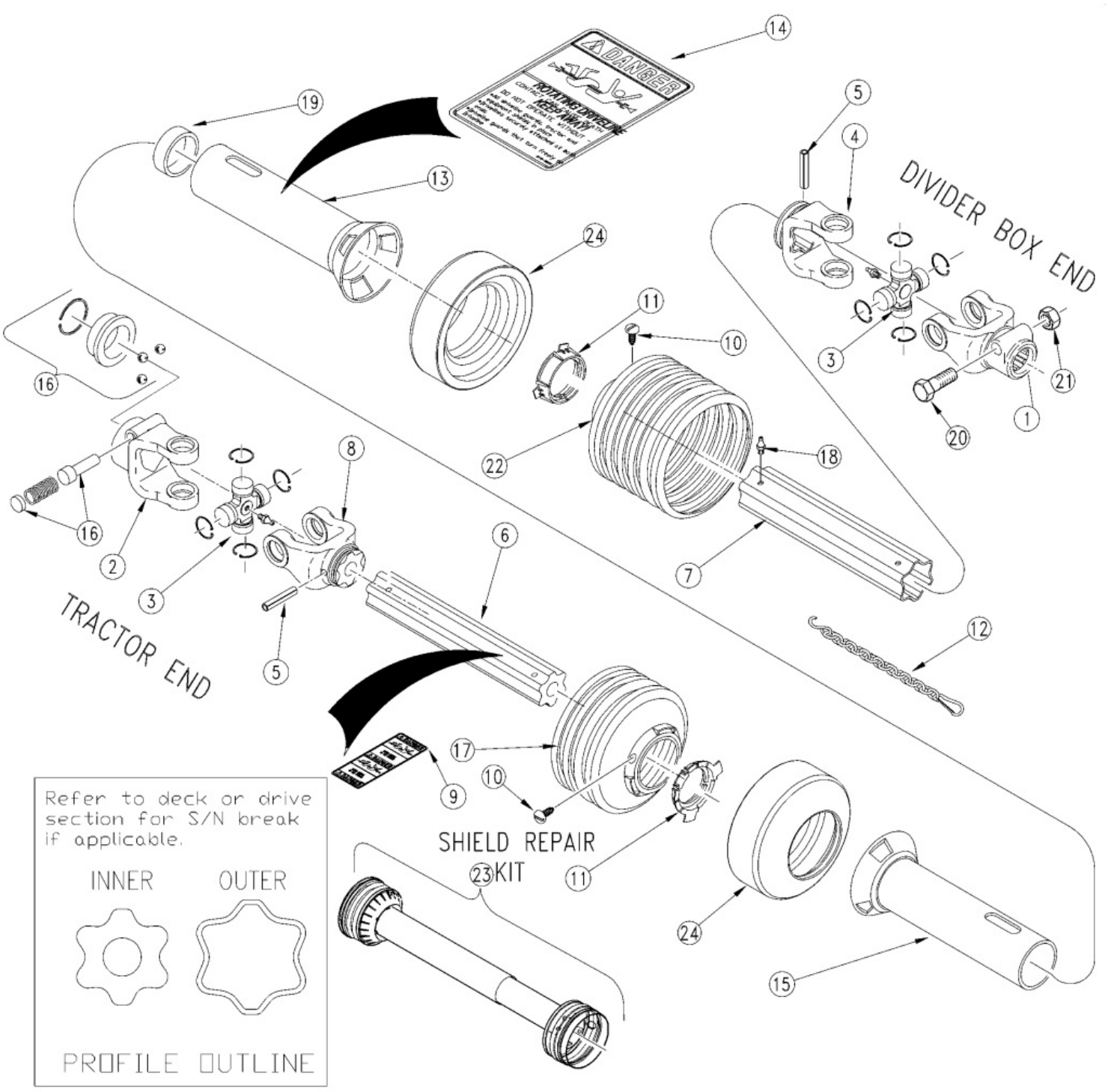

Driveline (826-112C) Walterscheid

Applies to Models: RCB6610 SERIES 2 S/N 944730+

Ref.	Part No.	Part Description	Comments
	DWG 18548	Drawing Image Number	
	826-112C	DRVLN C5 40 1.38-6 QD *	
1	325027	WS YOKE 1 3/4-20 SPL.I.C. 2500	
2	362428	WS YOKE 1 3/8"-6 SPL. ASG	
3	312209	WS CROSS & BRG KIT 2500	
4	097140	WS INBOARD YOKE S5	
5	304046	WS SPRING PIN 10 X 90	
6	321256	WS IN PROF 2400 (699713) 860MM	
7	390257	WS PROF&SLV W.A. 845MM	
8	097133	WS INBOARD YOKE S4	
9	818-540C	DECAL DANGER GUARD MISS PTO	
10	365305	WS SCREW	
11	087276	WS BRG RING - SC25	
12	044321	DRIVELINE SHIELD SAFETY CHAIN	(S/N 928934-)
13	389850	WS OUT SHLD RND (391409) 770MM	
14	818-552C	DECAL DANGER PTO DRIVELINE	
15	388957	RPBY 371918	Obsolete
16	364915	WS ASSY COLLAR KIT	S/N _____+
16	339107	WS Q.D. PIN KIT	S/N _____-
17	377437	WS SHIELD CONE 7 RIB	
18	380371	WS ZERK	
19	355155	WS SUPPORT BRG	
20	702352	WS HEX BOLT M16 X 90 GR 8.8	
21	304011	WS LOCK NUT M16	
22	377442	WS SHIELD CONE - 12 RIB	
23	826-587C	SHIELD KIT, 826-112C	
24	359474	WS REINFORCING COLLAR	

Driveline (826-247C) Walterscheid

Applies to Models: RCBM6610 SERIES 2 S/N 944730+

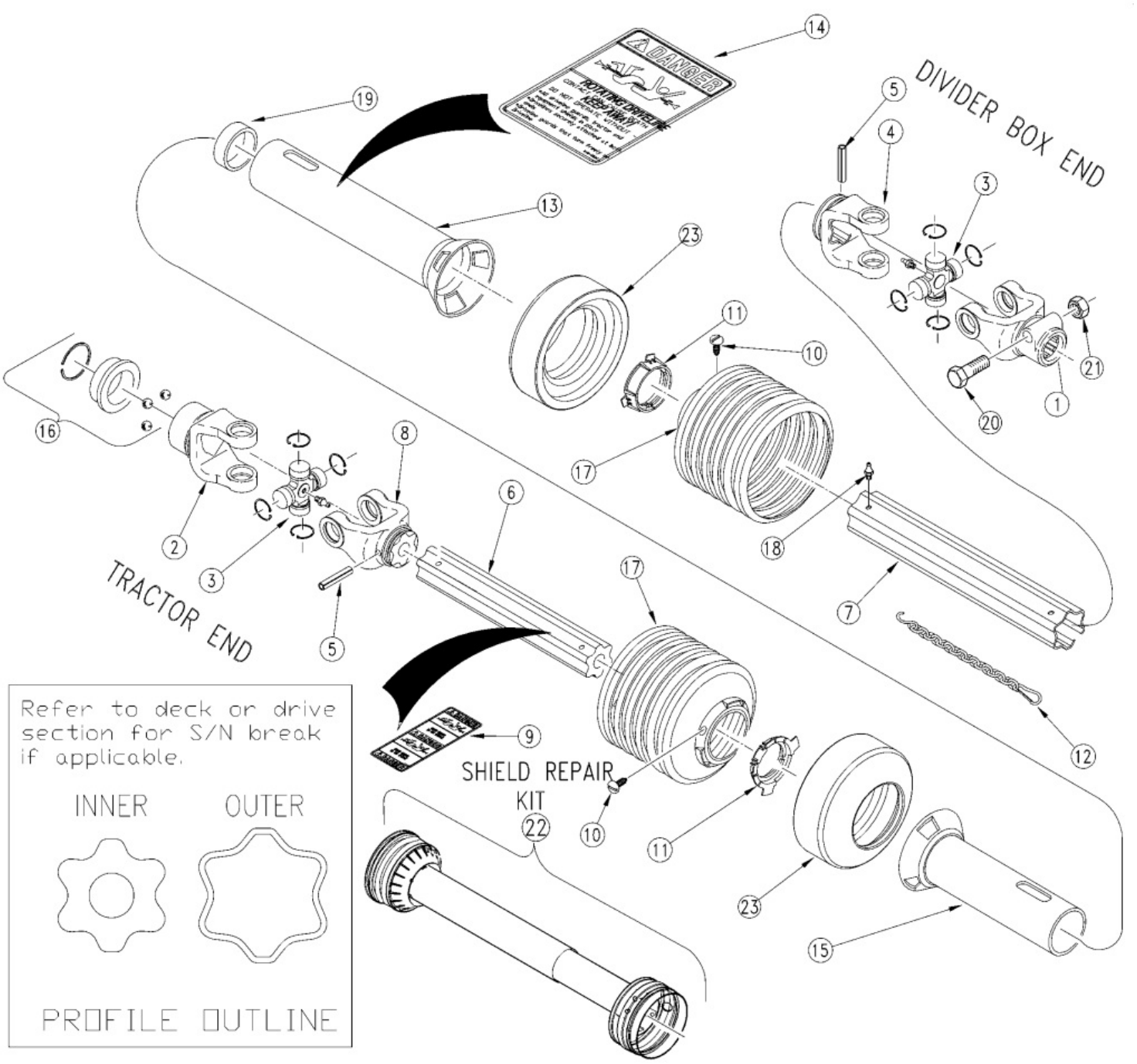

Driveline (826-247C) Walterscheid

Applies to Models: RCBM6610 SERIES 2 S/N 944730+

Ref.	Part No.	Part Description	Comments
	DWG 18549	Drawing Image Number	
	826-247C	DRVLN C5 44 1.38-21 QD *	
1	325027	WS YOKE 1 3/4-20 SPL.I.C. 2500	
2	362430	WS YOKE 1 3/8-21 SPL. AS	
3	312209	WS CROSS & BRG KIT 2500	
4	097140	WS INBOARD YOKE S5	
5	304046	WS SPRING PIN 10 X 90	
6	333645	RPBY 699713	
7	387768	WS PROFILE & SLEEVE W.A.	
8	097133	WS INBOARD YOKE S4	
9	818-540C	DECAL DANGER GUARD MISS PTO	
10	365305	WS SCREW	
11	087276	WS BRG RING - SC25	
12	044321	DRIVELINE SHIELD SAFETY CHAIN	(S/N 928934-)
13	391409	WS OUTER SHIELD TUBE OVAL	
14	818-552C	DECAL DANGER PTO DRIVELINE	
15	391410	WS INNER SHIELD TUBE RND.	
16	364915	WS ASSY COLLAR KIT	
17	377437	WS SHIELD CONE 7 RIB	
18	380371	WS ZERK	
19	355155	WS SUPPORT BRG	
20	702352	WS HEX BOLT M16 X 90 GR 8.8	
21	304011	WS LOCK NUT M16	
22	826-603C	SHIELD KIT, 826-247C	
23	359474	WS REINFORCING COLLAR	

Driveline (826-643C) Weasler

Applies to Models: RCB6610 SERIES 2 S/N 944730+

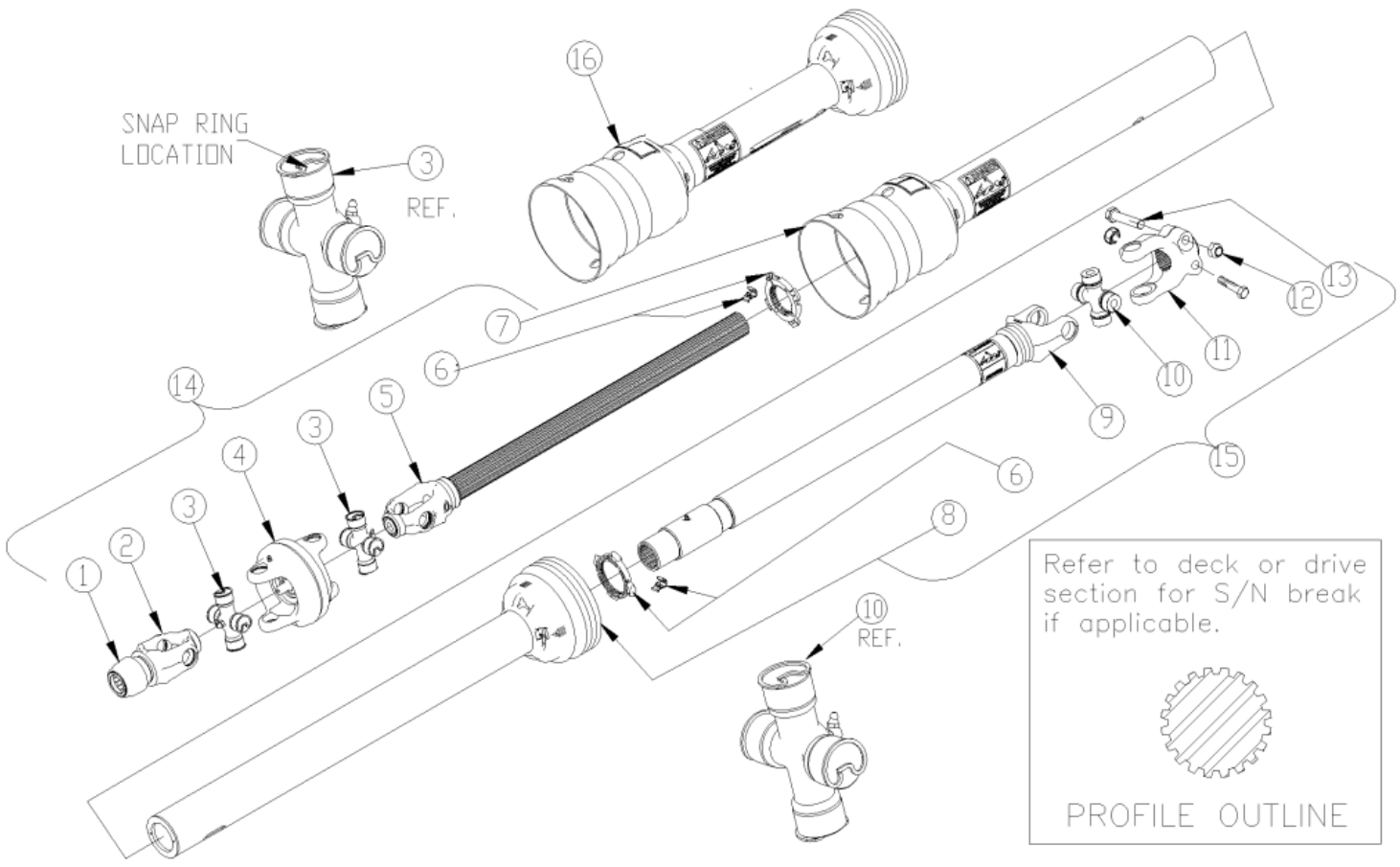

Driveline (826-643C) Weasler

Applies to Models: RCB6610 SERIES 2 S/N 944730+

Ref.	Part No.	Part Description	Comments
	DWG 37916	Image No.	
	826-643C	DRVLN C6 42 1.38-6 CV	
		*	
1	26-15120	WE SSL/AUTO-LOK REPAIR KIT	
2	68810-1004	WE WWCV AUTO-LOK YOKE ASM	
3	03-15570	WE AB8/AW25EBL CROSS KIT	
4	26-16033	WE WWCV CENTER HOUSING	
5	99-24406	WE YOKE&SHAFT (1.69-20 SPLINE)	
6	19-15135	WE GUARD REPAIR KIT	
7	97-24406	WE OUTER GUARD	
8	96-24406	WE INNER GUARD	
9	98-24406	WE YOKE, TUBE & SLIP SLEEVE	
10	03-15316	WE 55EBL CROSS KIT	
11	55051-1817	WE YOKE	
12	11-14988	WE LOCK NUT .625-11	
13	11-15180	WE BOLT .625-11 X 3.00L GR8	
14	93-24406	WE JOINT&SHFT HALF ASM W/GUARD	
15	92-24406	WE JOINT&TUBE HALF ASM W/GUARD	
16	90-24406	WE GUARD SET	

Driveline (826-644C) Weasler

Applies to Models: RCBM6610 SERIES 2 S/N 944730+

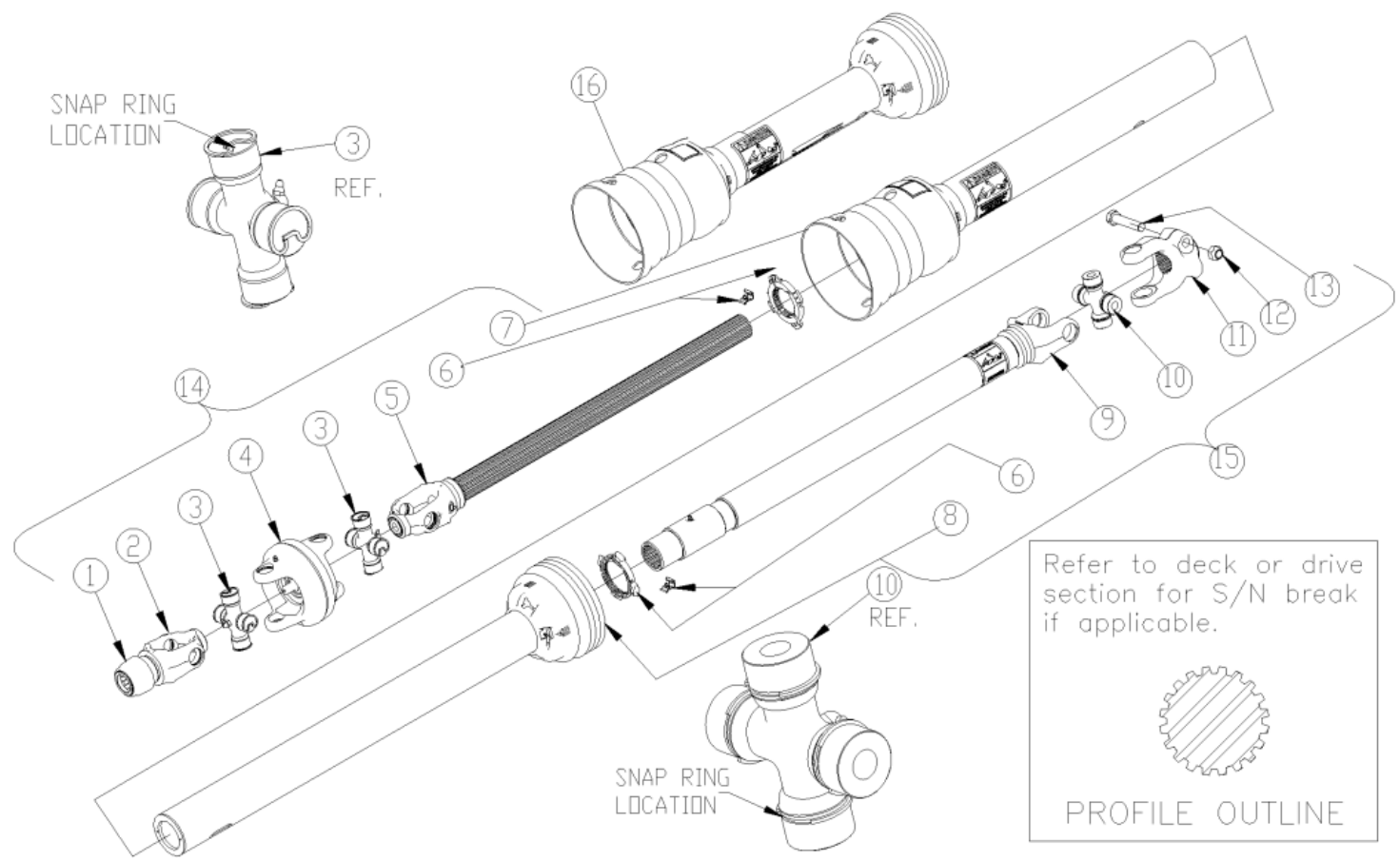

Driveline (826-644C) Weasler

Applies to Models: RCBM6610 SERIES 2 S/N 944730+

Ref.	Part No.	Part Description	Comments
	DWG 37911	Image No.	
	826-644C	DRVLN C6 42 1.38-21 CV	
		*	
1	26-15120	WE SSL/AUTO-LOK REPAIR KIT	
2	68810-1003	WE WWCV AUTO-LOK YOKE ASM	
3	03-15570	WE AB8/AW25EBL CROSS KIT	
4	26-16033	WE WWCV CENTER HOUSING	
5	99-24406	WE YOKE&SHAFT (1.69-20 SPLINE)	
6	19-15135	WE GUARD REPAIR KIT	
7	97-25023	WE OUTER GUARD	
8	96-24406	WE INNER GUARD	
9	98-24406	WE YOKE, TUBE & SLIP SLEEVE	
10	03-15316	WE 55EBL CROSS KIT	
11	55051-1817	WE YOKE	
12	11-14988	WE LOCK NUT .625-11	
13	11-15180	WE BOLT .625-11 X 3.00L GR8	
14	93-25023	WE JOINT&SHFT HALF ASM W/GUARD	
15	92-24406	WE JOINT&TUBE HALF ASM W/GUARD	
16	91-25023	WE GUARD SET	

Driveline (826-645C) Weasler

Applies to Models: RCBM6610 SERIES 2 S/N 944730+

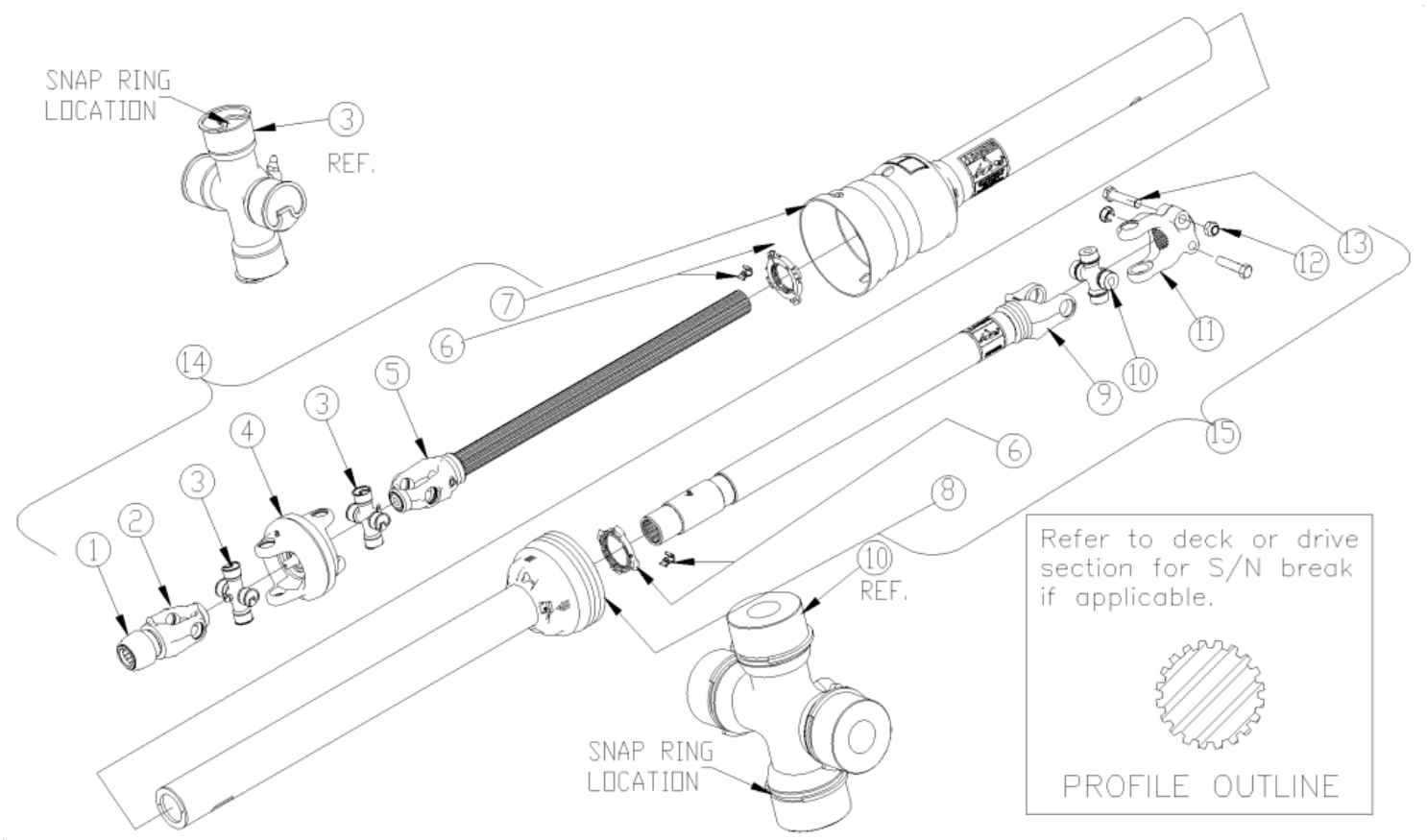

Driveline (826-645C) Weasler

Applies to Models: RCBM6610 SERIES 2 S/N 944730+

Ref.	Part No.	Part Description	Comments
	DWG 37912	Image No.	
	826-645C	DRVLN C6 47 1.75-20 CV *	Complete Assembly
1	26-13387	WE SSL/AUTO-LOK REPAIR KIT	
2	68810-1005	WE WWCV AUTO-LOK YOKE ASM	
3	03-15570	WE AB8/AW25EBL CROSS KIT	
4	26-16033	WE WWCV CENTER HOUSING	
5	99-24406	WE YOKE&SHAFT (1.69-20 SPLINE)	
6	19-15135	WE GUARD REPAIR KIT	
7	97-25075	WE OUTER GUARD	
8	96-25075	WE INNER GUARD	
9	98-25075	WE YOKE, TUBE & SLIP SLEEVE	
10	03-15316	WE 55EBL CROSS KIT	
11	55051-1817	WE YOKE	
12	11-14988	WE LOCK NUT .625-11	
13	11-15180	WE BOLT .625-11 X 3.00L GR8	
14	93-25075	WE JOINT&SHFT HALF ASM W/GUARD	
15	92-25075	WE JOINT&TUBE HALF ASM W/GUARD	

Driveline (826-793C) Weasler

Applies to Models: RCBM6610 SERIES 2 S/N 944730+

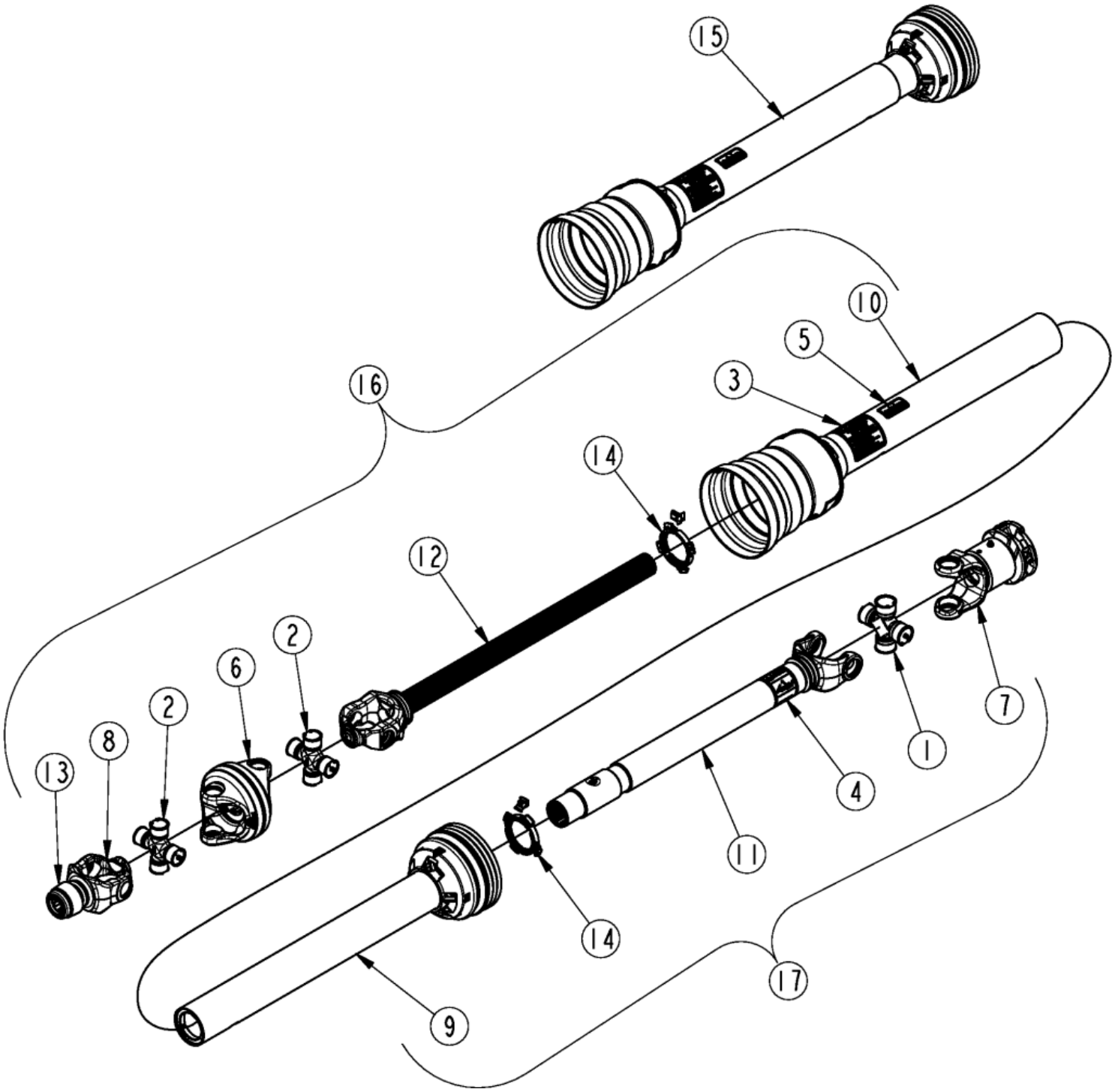

Driveline (826-793C) Weasler

Applies to Models: RCBM6610 SERIES 2 S/N 944730+

Ref.	Part No.	Part Description	Comments
	DWG 70947	Image No.	
	826-793C	DRVLN C6 39 1.38-21 CV ORCLTCH *	Complete assembly
1	03-15316	WE 55EBL CROSS KIT	
2	03-15570	WE AB8/AW25EBL CROSS KIT	
3	13-10021	WE SAFETY SIGN	
4	13-10022	WE SAFETY SIGN	
5	13-15249	WE DECAL LAND PRIDE	
6	26-16033	WE WWCV CENTER HOUSING	
7	39-10039	WE OVERRUNNING THRST CLTCH ASM	
8	68810-1003	WE WWCV AUTO-LOK YOKE ASM	
9	96-26654	WE INNER GUARD	
10	97-26654	WE OUTER GUARD	
11	98-26654	WE YOKE, TUBE & SLIP SLEEVE	
12	99-24406	WE YOKE&SHAFT (1.69-20 SPLINE)	
13	26-15120	WE SSL/AUTO-LOK REPAIR KIT	
14	19-15121	WE GRD REPAIR KIT	
15	90-26654	WE GUARD SET	
16	93-25023	WE JOINT&SHFT HALF ASM W/GUARD	
17	94-26654	WE JOINT & TUBE HALF ASM	

Driveline (826-812C) Comer

Applies to Models: RCBM6610 SERIES 2 S/N 944730+, RCB6610 SERIES 2 S/N 944730+

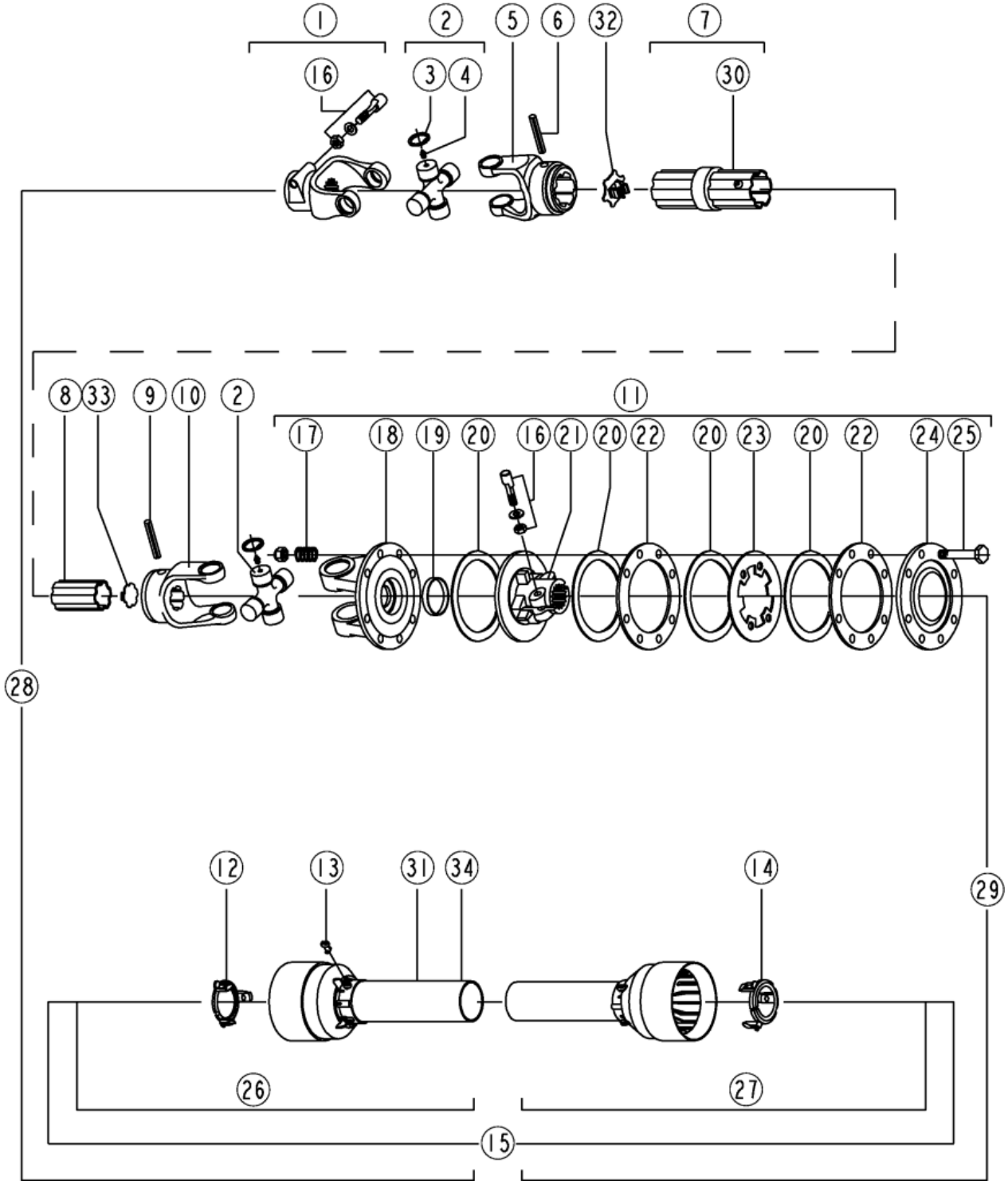

Driveline (826-812C) Comer

Applies to Models: RCBM6610 SERIES 2 S/N 944730+, RCB6610 SERIES 2 S/N 944730+

Ref.	Part No.	Part Description	Comments
	DWG 37918	Image No.	
	826-812C	DRVLN C5 48 1.75-20 FX CLTCH *	
1	141.028.195.1	COMER YOKE COMPLETE	
2	180.018.581	CO CROSS JOURNAL SET	
3	190.000.035	CO CIRCLIP	available only in cross journal set (#2)
4	190.000.047	CO GREASE NIPPLE	
5	151.018.241.1	COMER YOKE OUTER	
6	190.000.243	COMER OUTER TUBE ROLL PIN	
7	150.281.5197810	CO COMPLETE OUTER TUBE W/LABEL	
8	159.280.168	COMER INNER TUBE	
9	190.000.271	COMER ROLL PIN FOR INNER TUBE	
10	151.018.242.1	COMER INNER YOKE	
11	146.284.020.1	COMER CLUTCH, DISC COMPLETE	
12	180.018.251	COMER RETAINING COLLER INNER	
13	180.014.240	COMER BOLT	
14	180.018.252	COMER RETAINING COLLER INNER	
15	142.286.2519821	CO COMPLETE GUARD W/MANUAL	
16	165.000.589	COMER TAPERED PIN SET 1 3/4	
17	180.014.022	COMER SPRING	
18	151.018.016.1	COMER YOKE, FLANGED	
19	180.019.019	COMER BUSH	
20	180.019.340	COMER LINING RING	
21	151.018.228.1	COMER CLUTCH SUPPORT	
22	180.019.014	COMER INNER PLATE	
23	180.019.115	COMER INTERMEDIATE PLATE	
24	180.019.116.1	COMER PRESSURE PLATE	
25	165.000.548	COMER BOLT WITH NUT M10X100	
26	142.283.2509821	CO HALF FEMALE GUARD	
27	142.287.2199821	CO HALF MALE GUARD	
28	123.386.190.01	CO HALF FEMALE SHFT W/GUARDING	
29	123.486.343.01	CO HALF MALE SHAFT W/GUARDING	
30	190.000.098	COMER DANGER LABEL OUTER TUBE	
31	190.000.099	COMER DANGER LABEL GUARD OUTER	
32	180.018.393	COMER CAP OUTER TUBE, PLASTIC	
33	180.018.435	COMER INNER CAP	
34	190.000.932	CO LABEL W/CUSTOMER CODE	

Driveline (826-818C) Comer

Applies to Models: RCBM6610 SERIES 2 S/N 944730+, RCB6610 SERIES 2 S/N 944730+

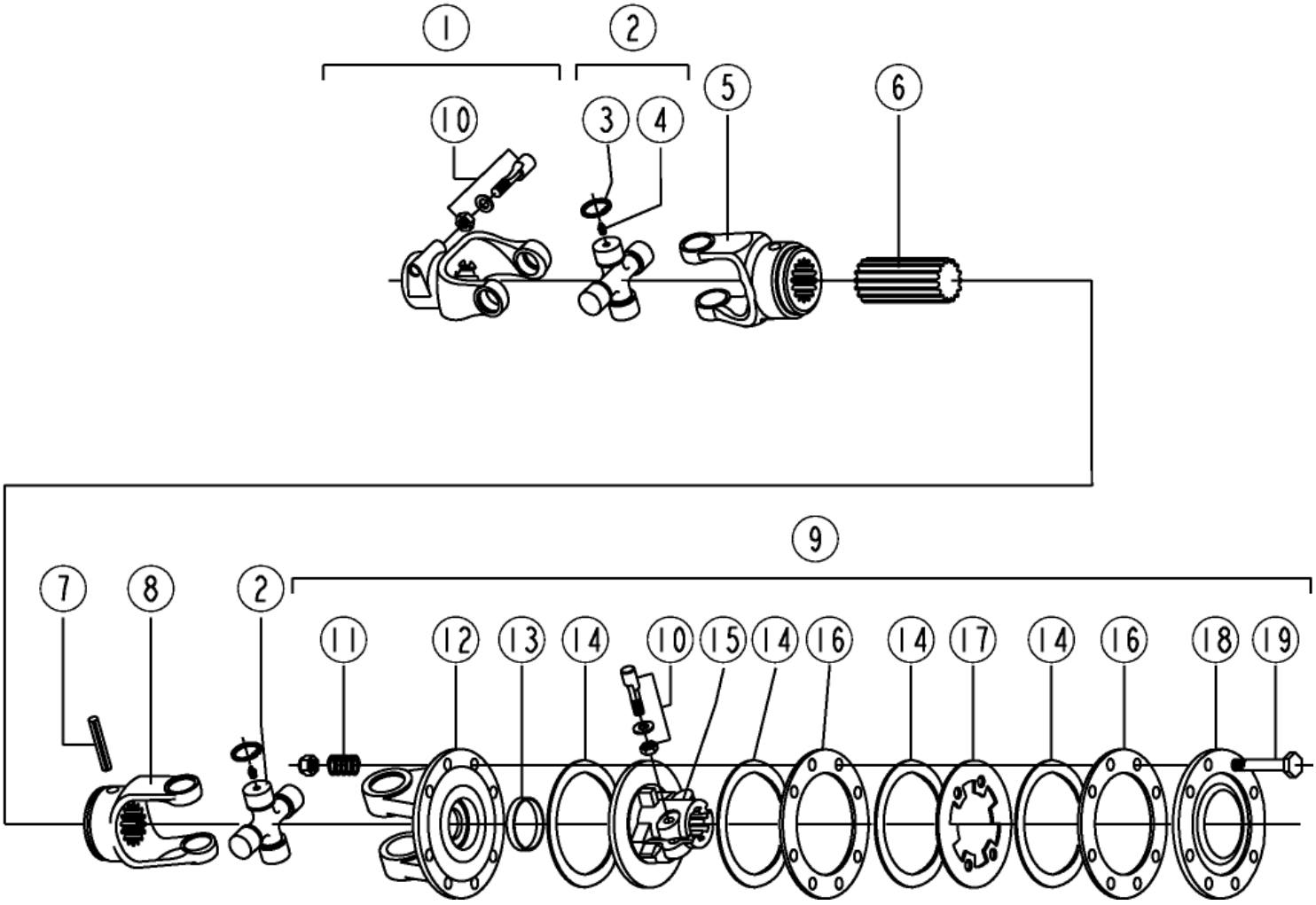

Driveline (826-818C) Comer

Applies to Models: RCBM6610 SERIES 2 S/N 944730+, RCB6610 SERIES 2 S/N 944730+

Ref.	Part No.	Part Description	Comments
	DWG 37510	Image No.	
	826-818C	DRVLN C5 11 1.75-20 FX CLTCH	
		*	
1	141.026.357.1	COMER YOKE COMPLETE	
2	180.016.780	CO CROSS JOURNAL SET	
3	190.000.032	CO CIRCLIP	
4	190.000.047	CO GREASE NIPPLE	
5	170.016.630.1	COMER YOKE, OUTER	
6	155.150.724	COMER SHAFT, SPLINED	
7	190.000.016	COMER ROLL PIN, INNER TUBE	
8	151.016.896.1	CO INNER YOKE	
9	146.264.024.1	COMER CLUTCH, COMPLETE ASSY	
10	165.000.589	COMER TAPERED PIN SET 1 3/4	
11	180.014.022	COMER SPRING	
12	151.016.037.1	COMER YOKE, FLANGED	
13	180.019.019	COMER BUSH	
14	180.019.340	COMER LINING RING	
15	151.018.228.1	COMER CLUTCH SUPPORT	
16	180.019.014	COMER INNER PLATE	
17	180.019.115	COMER INTERMEDIATE PLATE	
18	180.019.116.1	COMER PRESSURE PLATE	
19	165.000.548	COMER BOLT WITH NUT M10X100	

Gearbox (826-322C) Comer

Applies to Models: RCBM6610 SERIES 2 S/N 944730+

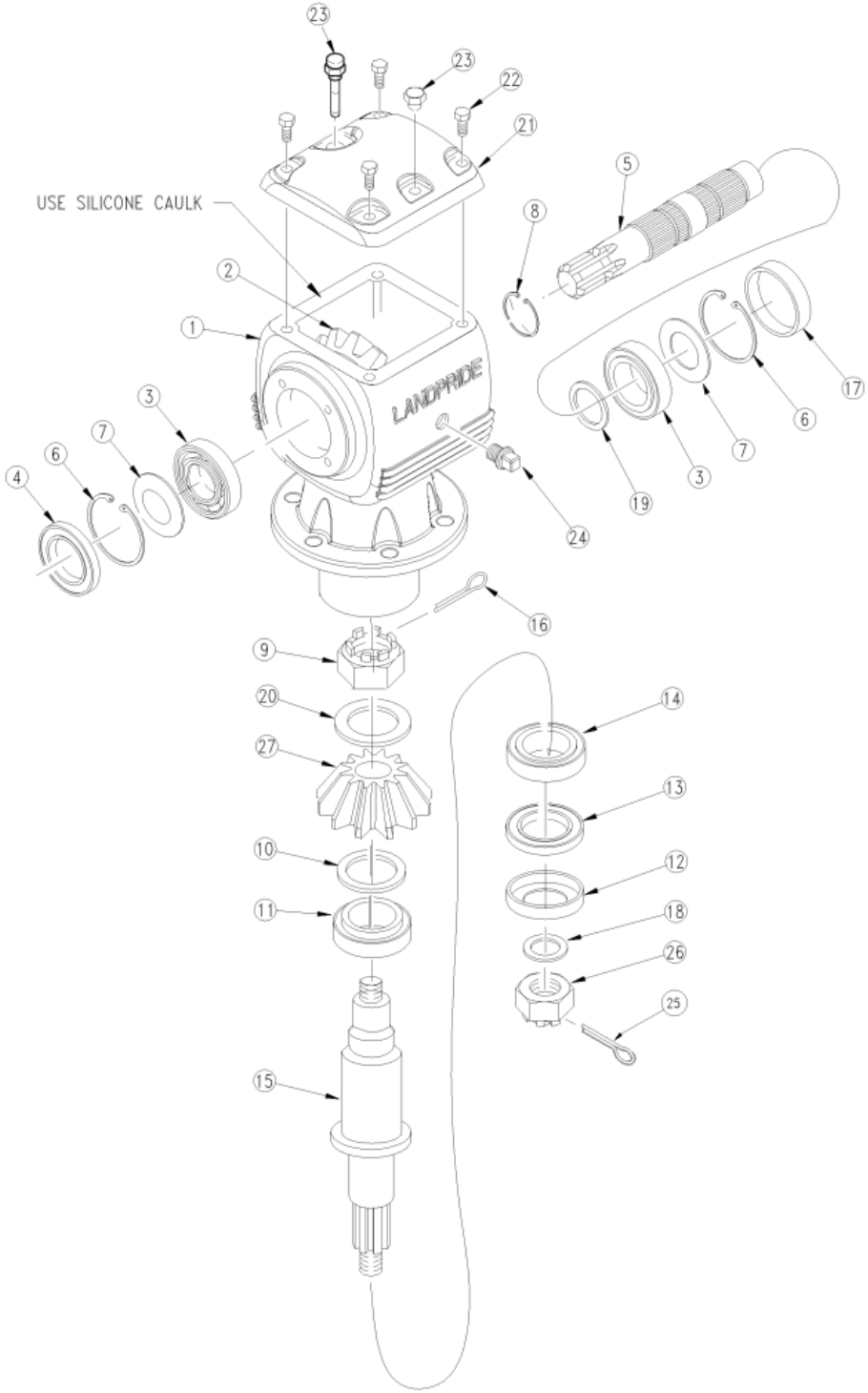

Gearbox (826-322C) Comer

Applies to Models: RCBM6610 SERIES 2 S/N 944730+

Ref.	Part No.	Part Description	Comments
	DWG 21167	Drawing Image Number	
	826-322C	GBOX RCM60 1:1.21 STD *	Complete assembly
1	U0.125.0532.00	CO HOUSING	
2	U0.125.5003.00	CO CROWN GEAR Z22 M7.8	
3	8.0.9.00143	CO BRG 30209 TAPERED	Includes bearing and race
4	8.7.1.02348	CO DUST LIP (45X85X10)	
4	8.7.3.00331	RPBY 8.7.1.02348	Obsolete
5	U0.125.2050.00	CO INPUT SHAFT 1 3/4"-20	
6	8.5.2.00332	CO SNAP RING UNI 7437	
7	A.709.500	COMER SHIM KIT	
7	0.709.7500.00	RPBY A.709.500	Obsolete
8	8.5.1.00533	CO SNAP RING 50 UNI7435	
9	U0.125.7100.00	CO CASTLE NUT	
10	A.712.500	COMER SHIM KIT	
10	0.712.7500.00	RPBY A.712.500	Obsolete
11	8.0.9.01090	CO BRG 32210 (50X90X24.75)	
12	1.181.7101.00	CO SEAL PROTECTOR	
13	8.7.1.02349	CO OIL SEAL 60X110X12 SL	
14	8.0.9.00079	CO BRG 30212 (60X110X23.75)	
15	U0.125.3003.00	CO OUTPUT SHAFT	
16	8.4.7.02265	CO COTTER PIN B 5X60	
17	0.121.7101.00	CO CAP	
18	0.288.7101.00	CO BLANK WASHER	
19	0.252.7525.00	CO SHIM 45.3X2.5	
20	0.285.7510.00	CO SHIM 40.3 X 61.7 X 1	
21	U0.125.1303.00	CO TOP COVER	
22	8.1.1.00501	CO BOLT M10X22 HHB	
23	826-486C	COMER U0.125.7003.00 DIPSTICK	
24	8.6.5.00006	CO OIL PLUG 3/8	
25	8.4.7.01045	CO COTTER PIN B6X70 SLD-SPRTLY	
26	8.2.2.00560	CO CASTLE NUT M36X3	
27	U0.125.6003.00	CO CROWN GEAR Z18 M7.8 *	
		Notes: Oil Type 80-90W Capacity 10 Pints	

Gearbox (826-324C) Comer

Applies to Models: RCBM6610 SERIES 2 S/N 944730+

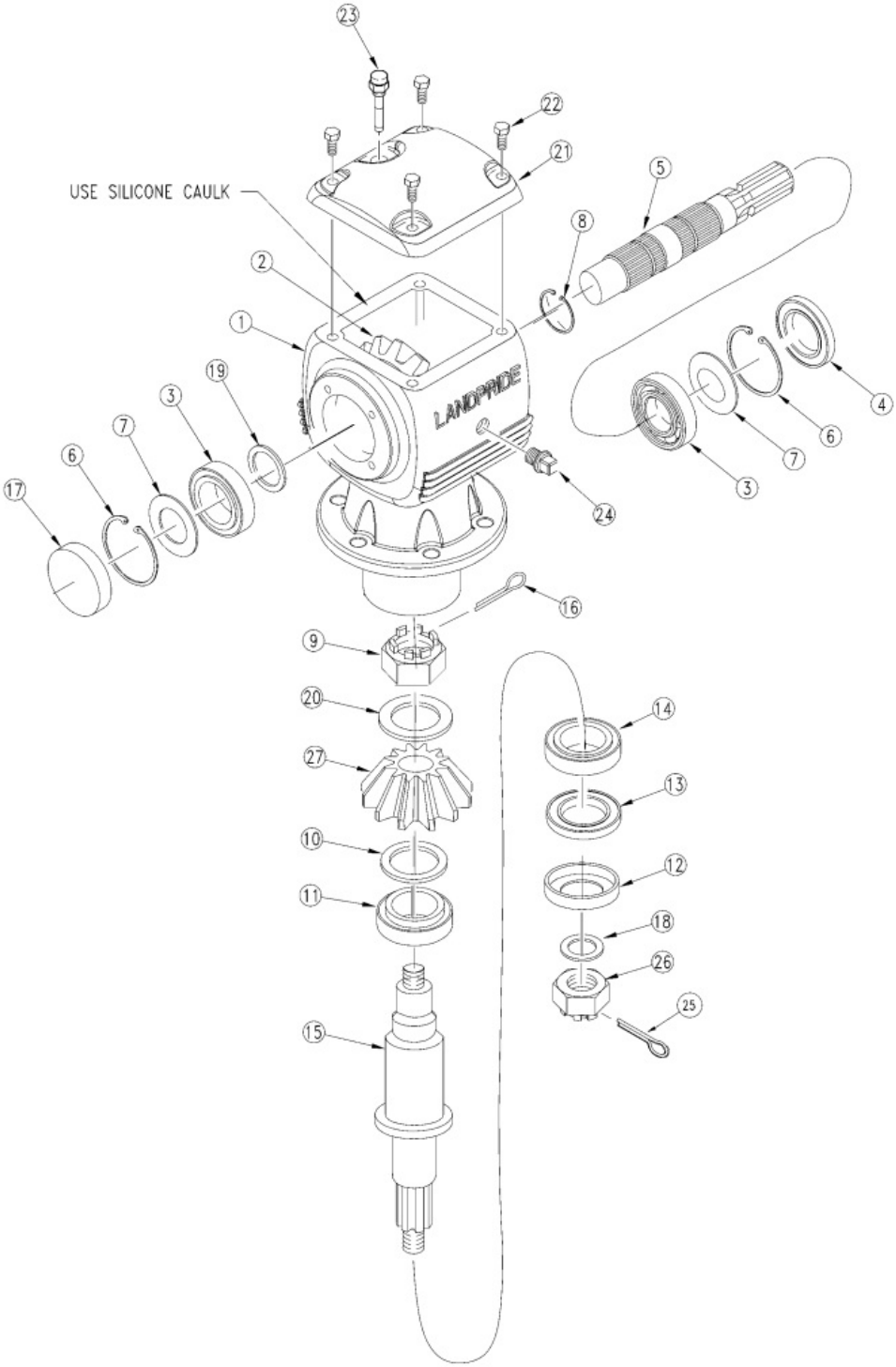

Gearbox (826-324C) Comer

Applies to Models: RCBM6610 SERIES 2 S/N 944730+

Ref.	Part No.	Part Description	Comments
	DWG 24726	Drawing Image Number	
	826-324C	RPBY 826-944C *	Complete assembly
1	U0.125.0532.00	CO HOUSING	
2	U0.125.5003.00	CO CROWN GEAR Z22 M7.8	
3	8.0.9.00143	CO BRG 30209 TAPERED	
4	8.7.1.02348	CO DUST LIP (45X85X10)	
4	8.7.3.00331	RPBY 8.7.1.02348	Obsolete
5	U0.125.2050.00	CO INPUT SHAFT 1 3/4"-20	
6	8.5.2.00332	CO SNAP RING UNI 7437	
7	A.709.500	COMER SHIM KIT	
7	0.709.7500.00	RPBY A.709.500	Obsolete
8	8.5.1.00533	CO SNAP RING 50 UNI7435	
9	U0.125.7100.00	CO CASTLE NUT	
10	A.712.500	COMER SHIM KIT	
10	0.712.7500.00	RPBY A.712.500	Obsolete
11	8.0.9.01090	CO BRG 32210 (50X90X24.75)	
12	1.181.7101.00	CO SEAL PROTECTOR	
13	8.7.1.02349	CO OIL SEAL 60X110X12 SL	
14	8.0.9.00079	CO BRG 30212 (60X110X23.75)	
15	U0.125.3003.00	CO OUTPUT SHAFT	
16	8.4.7.02265	CO COTTER PIN B 5X60	
17	0.121.7101.00	CO CAP	
18	0.288.7101.00	CO BLANK WASHER	
19	0.252.7525.00	CO SHIM 45.3X2.5	
20	0.285.7510.00	CO SHIM 40.3 X 61.7 X 1	
21	U0.125.1301.00	RPBY U0.125.1303.00	
22	8.1.1.00501	CO BOLT M10X22 HHB	
23	826-486C	COMER U0.125.7003.00 DIPSTICK	
23	U0.125.7003.00	RPBY 826-486C	Obsolete
24	8.6.5.00006	CO OIL PLUG 3/8	
25	8.4.7.01045	CO COTTER PIN B6X70 SLD-SPRTLY	
26	8.2.2.00560	CO CASTLE NUT M36X3	
27	U0.125.6003.00	CO CROWN GEAR Z18 M7.8 *	
		Notes: Oil Type 80-90W Capacity 10 Pints	

Gearbox (826-729C)

Applies to Models: RCB6610 SERIES 2 S/N 944730+

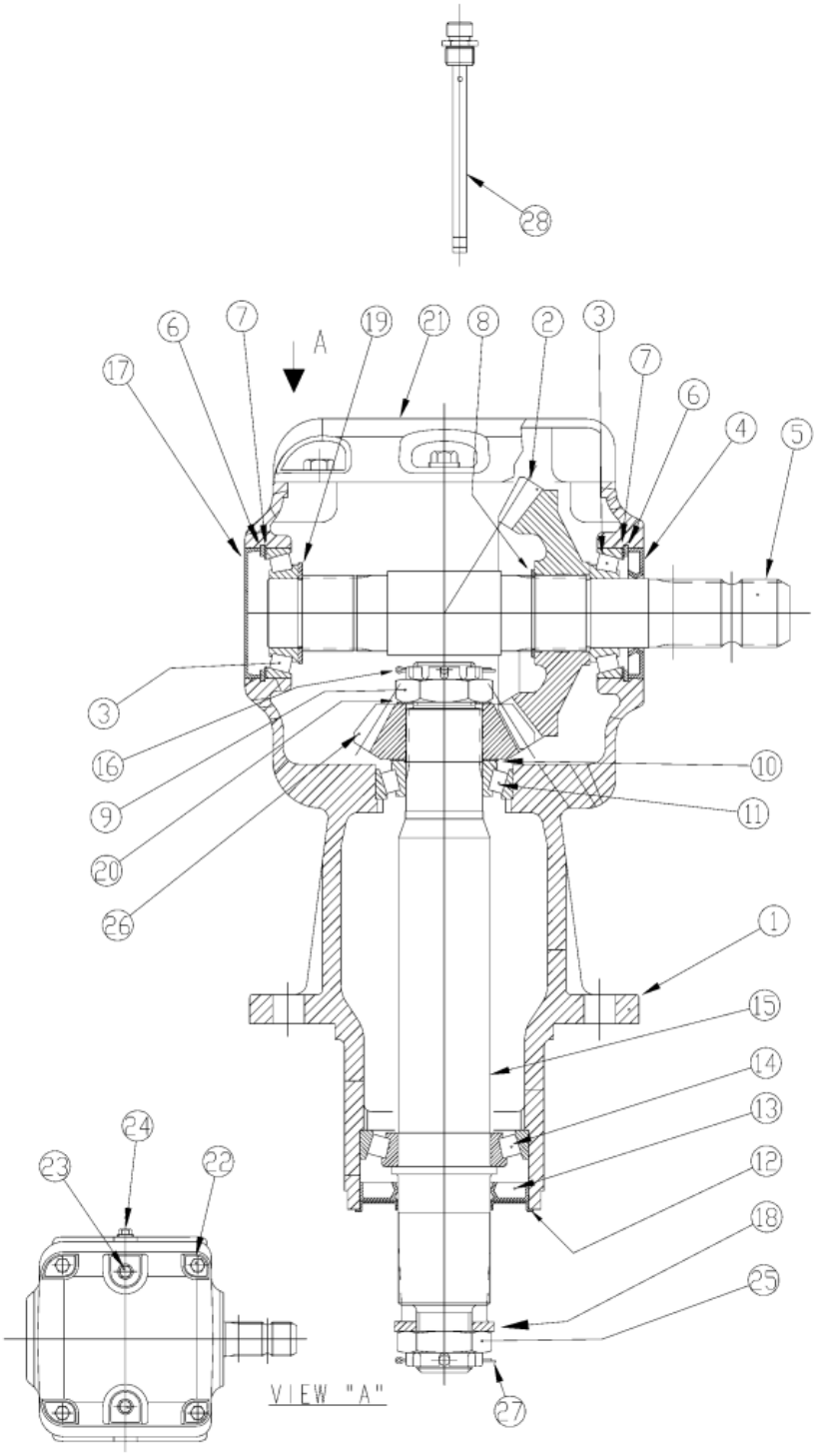

Gearbox (826-729C)

Applies to Models: RCB6610 SERIES 2 S/N 944730+

Ref.	Part No.	Part Description	Comments
	DWG 33987	Drawing Image Number	
	826-729C	GBOX RC60 1:1.60 STD	
		*	
1	U0.125.0532.00	CO HOUSING	
2	U0.125.6053.00	CO GEAR CROWN Z24 M7.25	
3	8.0.9.00143	CO BRG 30209 TAPERED	
4	8.7.1.02348	CO DUST LIP (45X85X10)	
4	8.7.3.00331	RPBY 8.7.1.02348	Obsolete
5	U0.125.2050.00	CO INPUT SHAFT 1 3/4"-20	
6	8.5.2.00332	CO SNAP RING UNI 7437	
7	A.709.500	COMER SHIM KIT	
8	8.5.1.00533	CO SNAP RING 50 UNI7435	
9	U0.125.7100.00	CO CASTLE NUT	
10	A.712.500	COMER SHIM KIT	
11	8.0.9.01090	CO BRG 32210 (50X90X24.75)	
12	1.181.7101.00	CO SEAL PROTECTOR	
13	8.7.1.02349	CO OIL SEAL 60X110X12 SL	
14	8.0.9.00079	CO BRG 30212 (60X110X23.75)	
15	U0.125.3003.00	CO OUTPUT SHAFT	
16	8.4.7.02265	CO COTTER PIN B 5X60	
17	0.121.7101.00	CO CAP	
18	0.288.7101.00	CO BLANK WASHER	
19	0.252.7525.00	CO SHIM 45.3X2.5	
20	0.285.7510.00	CO SHIM 40.3 X 61.7 X 1	
21	U0.125.1303.00	CO TOP COVER	
22	8.1.1.00501	CO BOLT M10X22 HHB	
23	8.6.5.00203	CO PLUG 1/2" GAS	
24	8.6.5.00006	CO OIL PLUG 3/8	
25	8.2.2.00560	CO CASTLE NUT M36X3	
26	U0.125.5053.00	CO GEAR PINION Z15 M7.25	
27	8.4.7.01045	CO COTTER PIN B6X70 SLD-SPRTLY	
28	826-486C	COMER U0.125.7003.00 DIPSTICK	

Gearbox (826-730C)

Applies to Models: RCB6610 SERIES 2 S/N 944730+

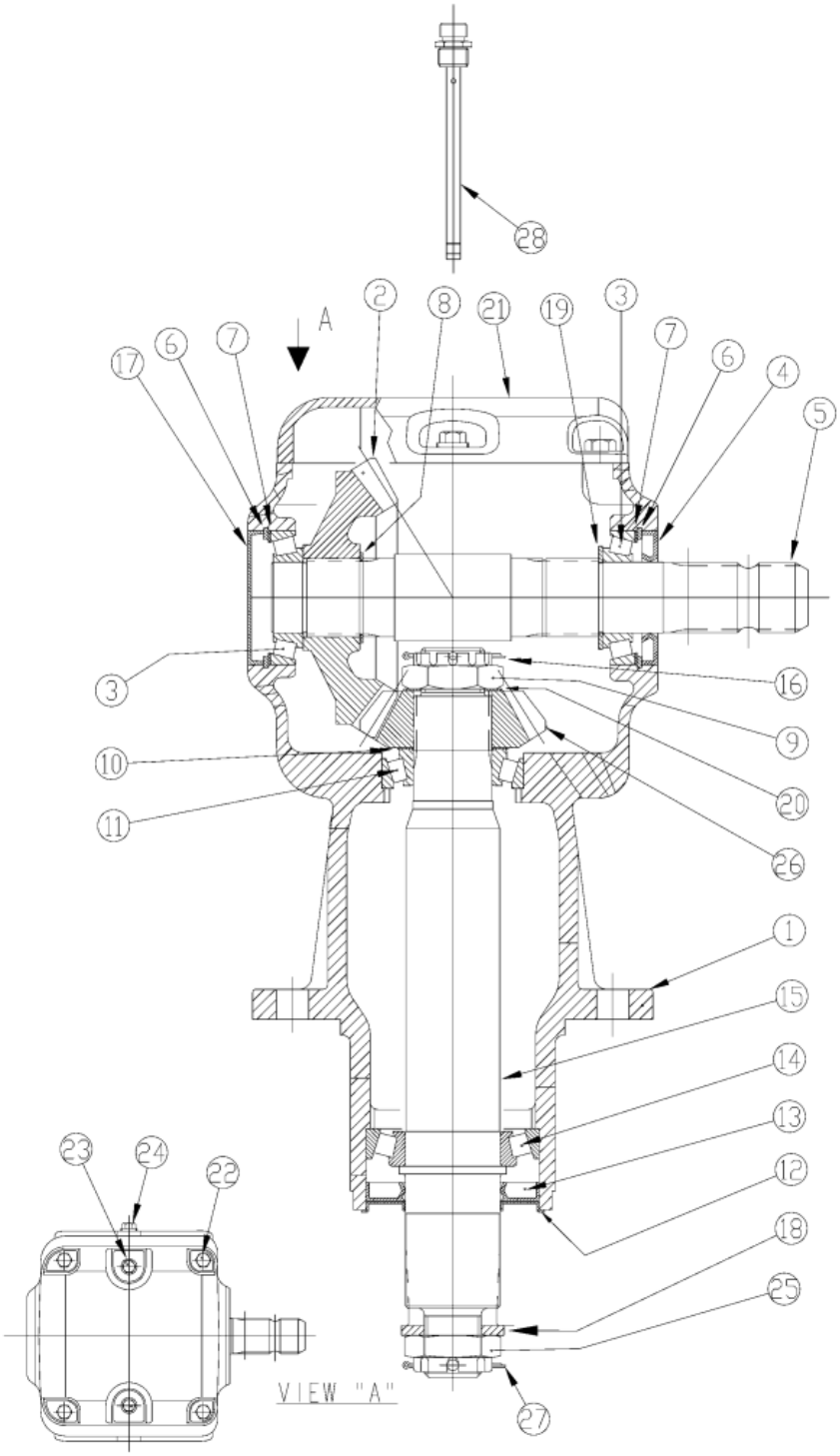

Gearbox (826-730C)

Applies to Models: RCB6610 SERIES 2 S/N 944730+

Ref.	Part No.	Part Description	Comments
	DWG 33988	Drawing Image Number	
	826-730C	GBOX RC60 1:1.60 REV *	
1	U0.125.0532.00	CO HOUSING	
2	U0.125.6053.00	CO GEAR CROWN Z24 M7.25	
3	8.0.9.00143	CO BRG 30209 TAPERED	
4	8.7.1.02348	CO DUST LIP (45X85X10)	
4	8.7.3.00331	RPBY 8.7.1.02348	Obsolete
5	U0.125.2050.00	CO INPUT SHAFT 1 3/4"-20	
6	8.5.2.00332	CO SNAP RING UNI 7437	
7	A.709.500	COMER SHIM KIT	
8	8.5.1.00533	CO SNAP RING 50 UNI7435	
9	U0.125.7100.00	CO CASTLE NUT	
10	A.712.500	COMER SHIM KIT	
11	8.0.9.01090	CO BRG 32210 (50X90X24.75)	
12	1.181.7101.00	CO SEAL PROTECTOR	
13	8.7.1.02349	CO OIL SEAL 60X110X12 SL	
14	8.0.9.00079	CO BRG 30212 (60X110X23.75)	
15	U0.125.3003.00	CO OUTPUT SHAFT	
16	8.4.7.02265	CO COTTER PIN B 5X60	
17	0.121.7101.00	CO CAP	
18	0.288.7101.00	CO BLANK WASHER	
19	0.252.7525.00	CO SHIM 45.3X2.5	
20	0.285.7510.00	CO SHIM 40.3 X 61.7 X 1	
21	U0.125.1303.00	CO TOP COVER	
22	8.1.1.00501	CO BOLT M10X22 HHB	
23	8.6.5.00203	CO PLUG 1/2" GAS	
24	8.6.5.00006	CO OIL PLUG 3/8	
25	8.2.2.00560	CO CASTLE NUT M36X3	
26	U0.125.5053.00	CO GEAR PINION Z15 M7.25	
27	8.4.7.01045	CO COTTER PIN B6X70 SLD-SPRTLY	
28	826-486C	COMER U0.125.7003.00 DIPSTICK	

Gearbox (826-731C)

Applies to Models: RCBM6610 SERIES 2 S/N 944730+

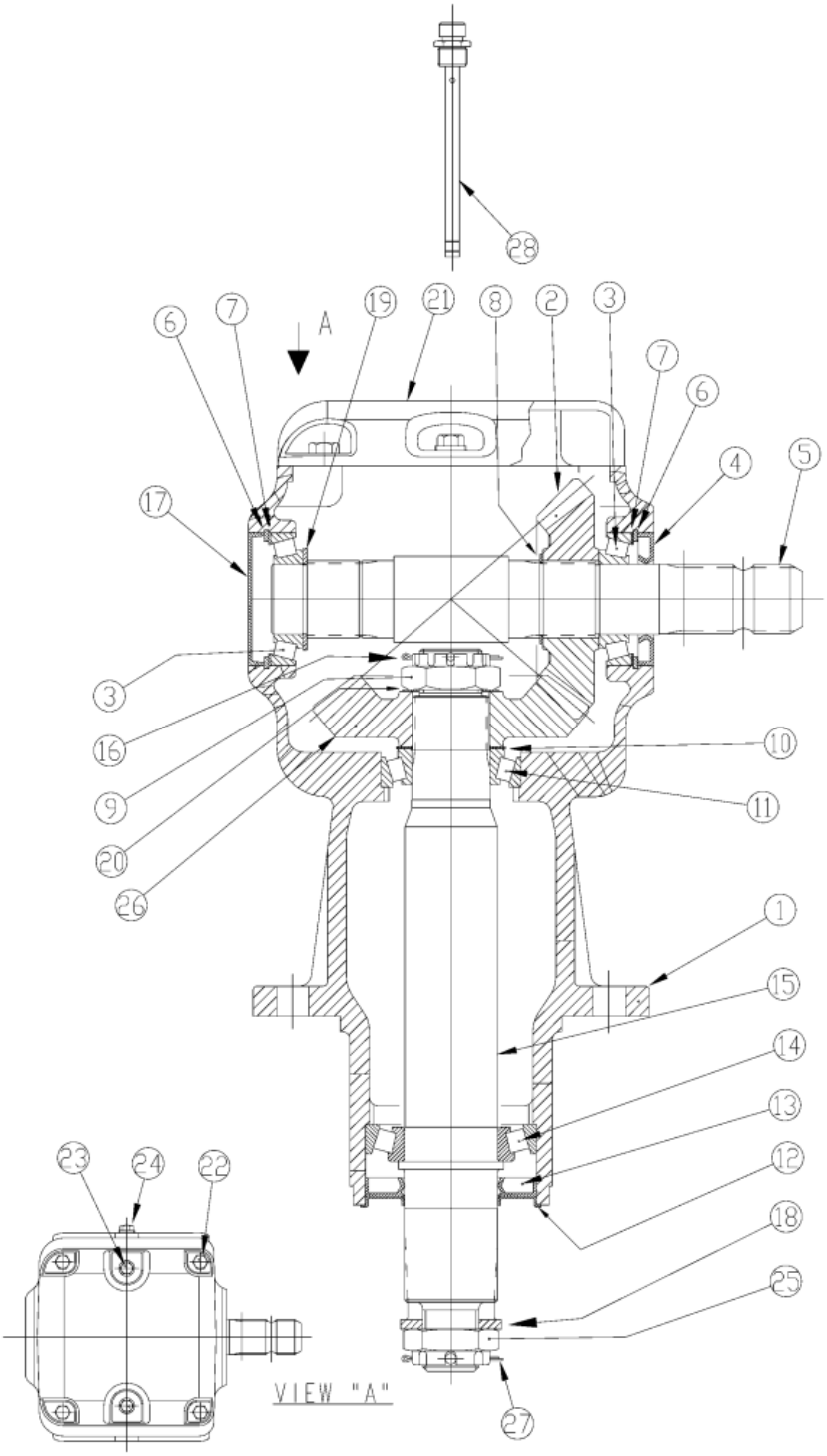

Gearbox (826-731C)

Applies to Models: RCBM6610 SERIES 2 S/N 944730+

Ref.	Part No.	Part Description	Comments
	DWG 33989	Drawing Image Number	
	826-731C	GBOX RC60 1.15:1 STD *	(Obsolete) Obsolete
1	U0.125.0532.00	CO HOUSING	
2	U0.125.5061.00	CO GEAR PINION Z19 M7.8	
3	8.0.9.00143	CO BRG 30209 TAPERED	
4	8.7.1.02348	CO DUST LIP (45X85X10)	
4	8.7.3.00331	RPBY 8.7.1.02348	Obsolete
5	U0.125.2050.00	CO INPUT SHAFT 1 3/4"-20	
6	8.5.2.00332	CO SNAP RING UNI 7437	
7	A.709.500	COMER SHIM KIT	
8	8.5.1.00533	CO SNAP RING 50 UNI7435	
9	U0.125.7100.00	CO CASTLE NUT	
10	A.712.500	COMER SHIM KIT	
11	8.0.9.01090	CO BRG 32210 (50X90X24.75)	
12	1.181.7101.00	CO SEAL PROTECTOR	
13	8.7.1.02349	CO OIL SEAL 60X110X12 SL	
14	8.0.9.00079	CO BRG 30212 (60X110X23.75)	
15	U0.125.3003.00	CO OUTPUT SHAFT	
16	8.4.7.02265	CO COTTER PIN B 5X60	
17	0.121.7101.00	CO CAP	
18	0.288.7101.00	CO BLANK WASHER	
19	0.252.7525.00	CO SHIM 45.3X2.5	
20	0.285.7510.00	CO SHIM 40.3 X 61.7 X 1	
21	U0.125.1303.00	CO TOP COVER	
22	8.1.1.00501	CO BOLT M10X22 HHB	
23	8.6.5.00203	CO PLUG 1/2" GAS	
24	8.6.5.00006	CO OIL PLUG 3/8	
25	8.2.2.00560	CO CASTLE NUT M36X3	
26	U0.125.6061.00	CO GEAR CROWN Z22 M7.8	
27	8.4.7.01045	CO COTTER PIN B6X70 SLD-SPRTLY	
28	826-486C	COMER U0.125.7003.00 DIPSTICK	

Gearbox (826-732C)

Applies to Models: RCBM6610 SERIES 2 S/N 944730+

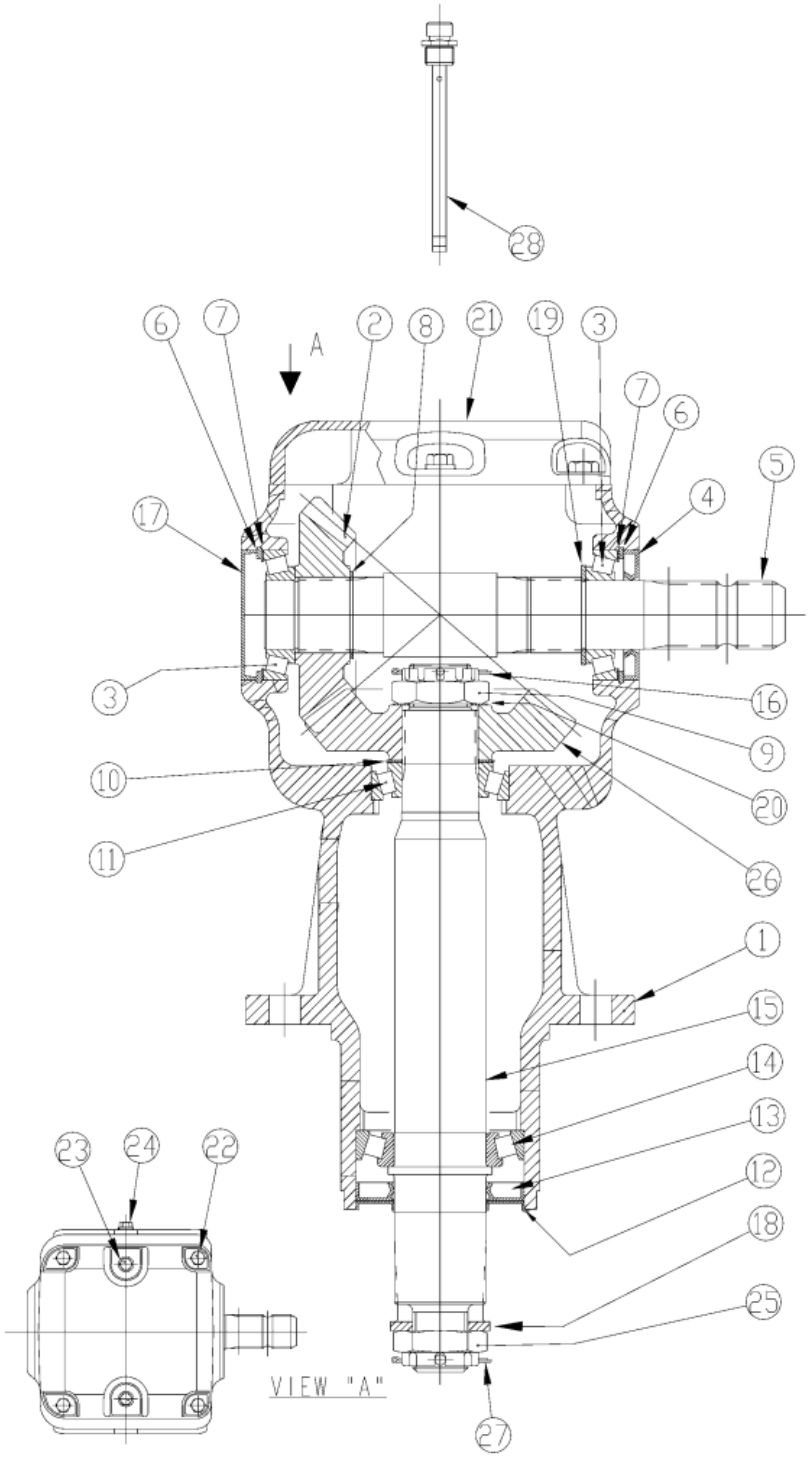

Gearbox (826-732C)

Applies to Models: RCBM6610 SERIES 2 S/N 944730+

Ref.	Part No.	Part Description	Comments
	DWG 35002	Drawing Image Number	
	826-732C	GBOX RC60 1.15:1 REV *	(Obsolete) Complete assembly
1	U0.125.0532.00	CO HOUSING	
2	U0.125.5061.00	CO GEAR PINION Z19 M7.8	
3	8.0.9.00143	CO BRG 30209 TAPERED	
4	8.7.1.02348	CO DUST LIP (45X85X10)	
4	8.7.3.00331	RPBY 8.7.1.02348	Obsolete
5	U0.125.2050.00	CO INPUT SHAFT 1 3/4"-20	
6	8.5.2.00332	CO SNAP RING UNI 7437	
7	A.709.500	COMER SHIM KIT	
8	8.5.1.00533	CO SNAP RING 50 UNI7435	
9	U0.125.7100.00	CO CASTLE NUT	
10	A.712.500	COMER SHIM KIT	
11	8.0.9.01090	CO BRG 32210 (50X90X24.75)	
12	1.181.7101.00	CO SEAL PROTECTOR	
13	8.7.1.02349	CO OIL SEAL 60X110X12 SL	
14	8.0.9.00079	CO BRG 30212 (60X110X23.75)	
15	U0.125.3003.00	CO OUTPUT SHAFT	
16	8.4.7.02265	CO COTTER PIN B 5X60	
17	0.121.7101.00	CO CAP	
18	0.288.7101.00	CO BLANK WASHER	
19	0.252.7525.00	CO SHIM 45.3X2.5	
20	0.285.7510.00	CO SHIM 40.3 X 61.7 X 1	
21	U0.125.1303.00	CO TOP COVER	
22	8.1.1.00501	CO BOLT M10X22 HHB	
23	8.6.5.00203	CO PLUG 1/2" GAS	
24	8.6.5.00006	CO OIL PLUG 3/8	
25	8.2.2.00560	CO CASTLE NUT M36X3	
26	U0.125.6061.00	CO GEAR CROWN Z22 M7.8	
27	8.4.7.01045	CO COTTER PIN B6X70 SLD-SPRTLY	
28	826-486C	COMER U0.125.7003.00 DIPSTICK	

Gearbox Divider (826-520C) Comer

Applies to Models: RCB6610 SERIES 2 S/N 944730+

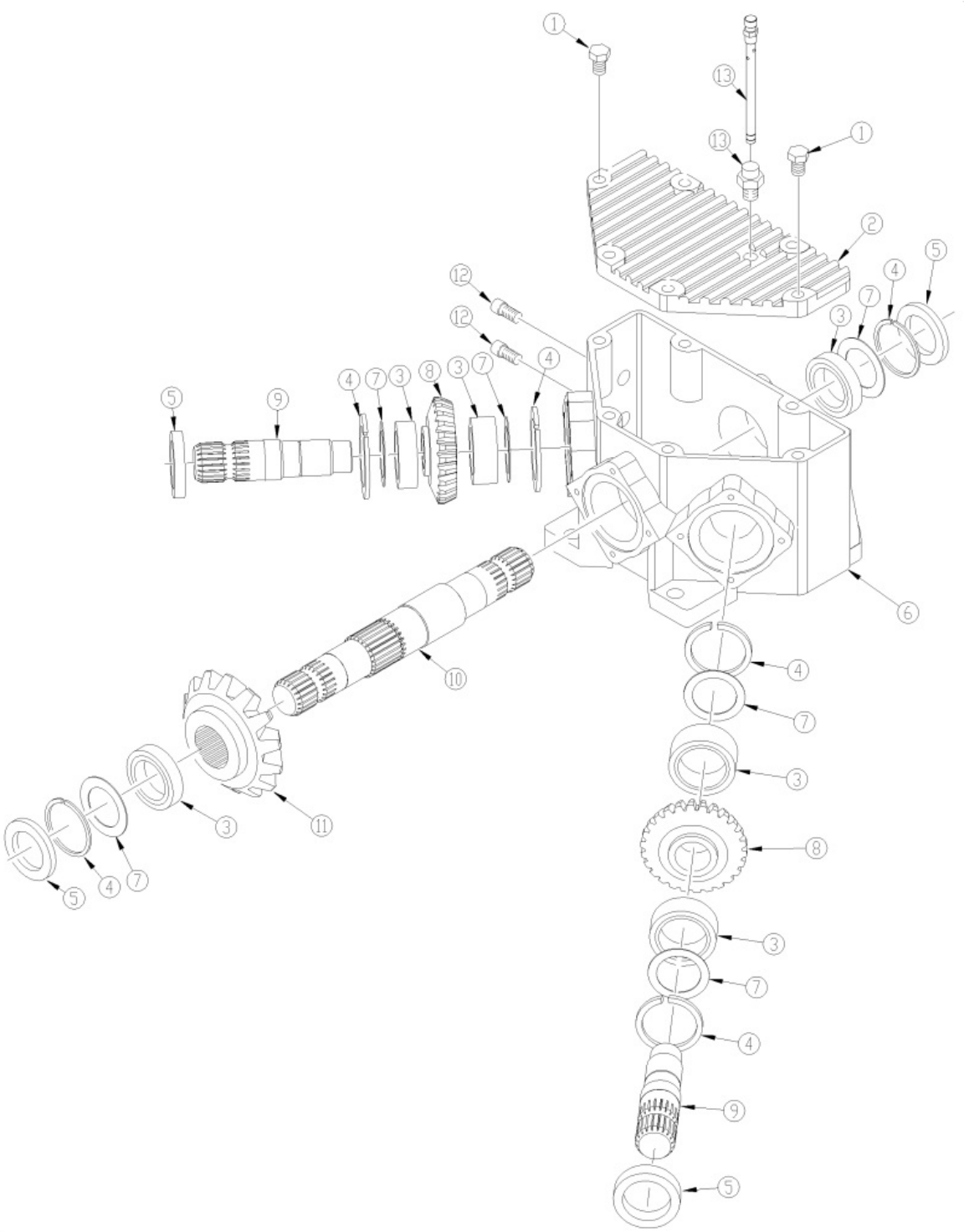

Gearbox Divider (826-520C) Comer

Applies to Models: RCB6610 SERIES 2 S/N 944730+

Ref.	Part No.	Part Description	Comments
	DWG 26959	Image No.	
	826-520C	DIV BOX 540RPM 1 3/4-20 *	
1	8.1.1.00109	CO BOLT M10 X 35 8.8	
2	0.305.1300.00	TOP COVER PLATE	
3	8.0.9.00143	CO BRG 30209 TAPERED	Includes bearing and race
4	8.5.2.01772	CO SNAP RING	
5	8.7.1.02348	CO DUST LIP (45X85X10)	
5	8.7.3.00331	RPBY 8.7.1.02348	Obsolete
6	0.305.0300.01	CO CASING	
7	A.709.500	COMER SHIM KIT	
8	N/A	NOT AVAILABLE	Replaced by A.305.500
9	0.305.3000.00	CO SHAFT 1" 3/4 Z20	
10	0.305.2000.00	CO SHAFT 1" 3/4 Z20	
11	N/A	NOT AVAILABLE	Replaced by A.305.500
12	8.6.6.00201	CO PLUG 3/8 (SOLID PLUG)	
13	826-848C	COMER 0.340.7101.00 DIPSTICK	S/N 1011370+
13	826-497C	COMER VENT #8.6.7.00269	S/N 1011369-
14	A.305.500	CO TRIAD GEAR Z20-Z20-Z24 M6.5 *	Contains 2 of gear #8 and 1 of gear #11
		Notes: Oil Type 80-90W Capacity 5.5 Pints	

Gearbox Divider (826-520C) ITG

Applies to Models: RCB6610 SERIES 2 S/N 944730+

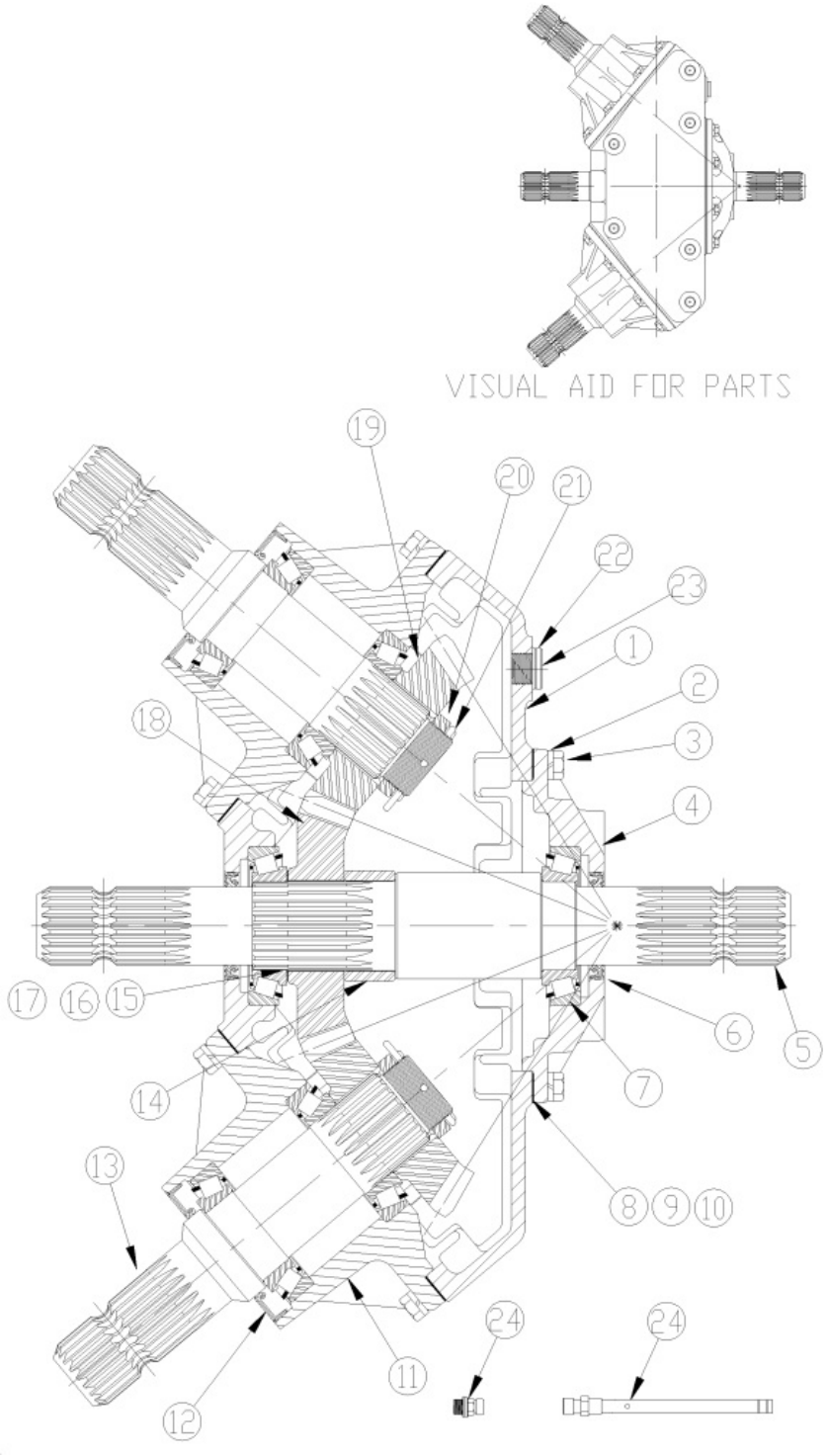

Gearbox Divider (826-520C) ITG

Applies to Models: RCB6610 SERIES 2 S/N 944730+

Ref.	Part No.	Part Description	Comments
	DWG 25681	Image No.	
	826-520C	DIV BOX 540RPM 1 3/4-20 *	
1	18-059	ITG HOUSING	
2	804-158C	WASHER SPRING LOCK M10 PLT	
3	06-003	ITG M10 X 1.5 X 30 CAP SCREW	
4	20-019	ITG INPUT CAP SPLITTER BOX	
5	02-038	ITG INPUT SHAFT	
6	05-007	ITG INPUT SHAFT OIL SEAL	
7	822-214C	BRG CUP/CONE SET 30210	Includes bearing and race
7	04-011	RPBY 822-214C	(Obsolete) Includes bearing and race
8	08-006	ITG INPUT CAP GASKET 0.10MM	
9	08-007	ITG INPUT CAP GASKET 0.25MM	
10	08-008	ITG IN & OUT CAP GASKET 0.45MM	
11	20-018	ITG HORIZONTAL HUB CAP	Obsolete
12	05-012B	ITG OUTPUT SEAL 58X95X10 THK	
13	02-039	ITG OUTPUT SHAFT	
14	10-001	ITG SPACER	
15	17-002	ITG GEAR ADJUSTING SHIM 0.30	
16	17-001	ITG SHIM 0.2	
17	17-003	ITG GEAR ADJUSTING SHIM 0.50	
18	03-127	ITG 23 TOOTH GEAR	
19	03-126	19 TOOTH GEAR	
20	11-012	ITG BRG ADJ. NUT	
21	12-008	ITG COTTER PIN	
22	07-022	ITG SEALING WASHER	
23	09-013	ITG DRAIN PLUG	
24	16-110	ITG M18X1.5 DIP STICK BREATHER	S/N _____+
24	09-011	ITG M18 X 1.5P PLUG VENTED *	S/N _____-
		Notes: Oil Type 80-90W Capacity 5.5 Pints	

Gearbox Divider (826-521C) Comer

Applies to Models: RCBM6610 SERIES 2 S/N 944730+

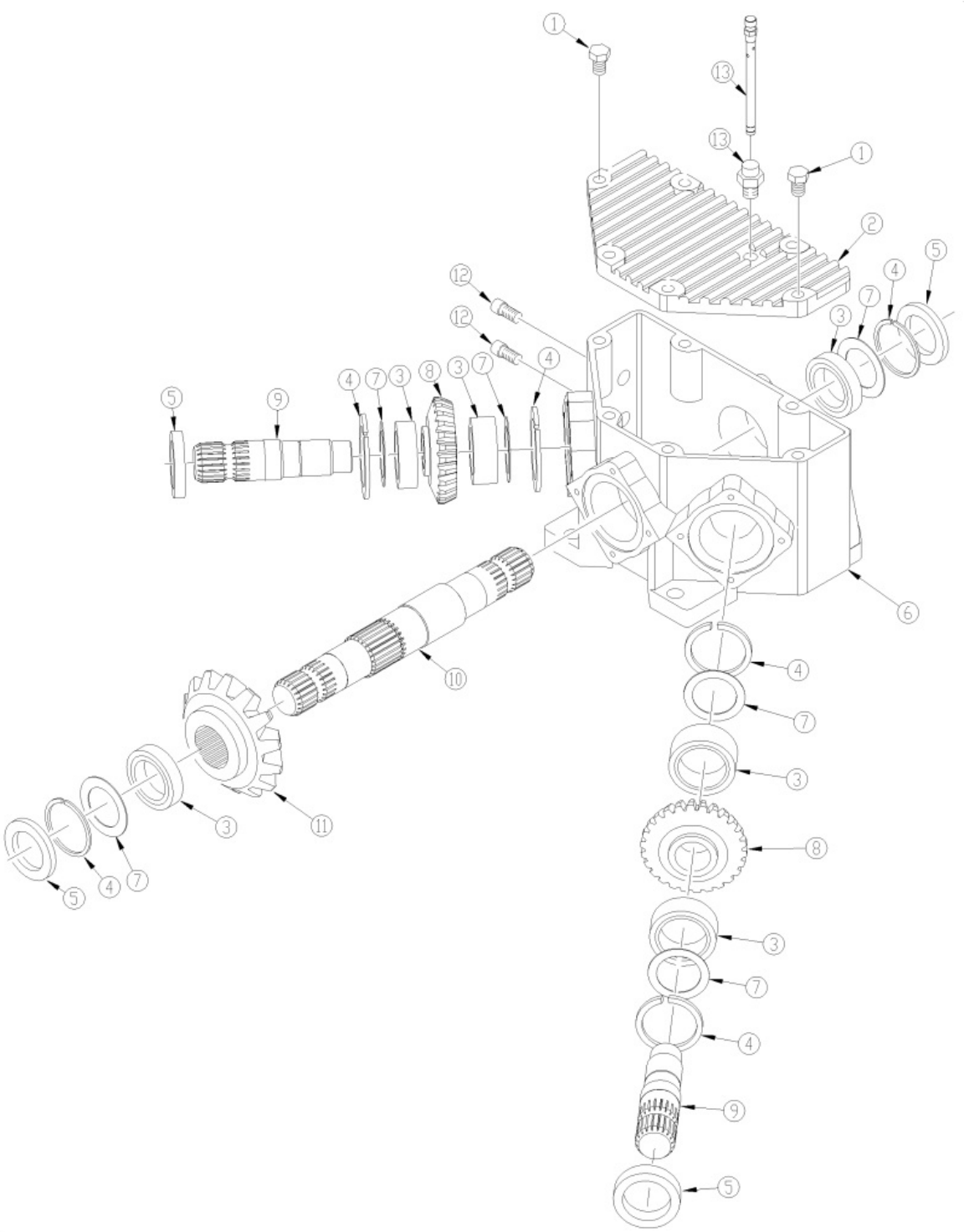

Gearbox Divider (826-521C) Comer

Applies to Models: RCBM6610 SERIES 2 S/N 944730+

Ref.	Part No.	Part Description	Comments
	DWG 26960	Image No.	
	826-521C	DIV BOX 1000RPM 1 3/4-20 *	
1	8.1.1.00109	CO BOLT M10 X 35 8.8	
2	0.305.1300.00	TOP COVER PLATE	
3	8.0.9.00143	CO BRG 30209 TAPERED	
4	8.5.2.01772	CO SNAP RING	
5	8.7.1.02348	CO DUST LIP (45X85X10)	
5	8.7.3.00331	RPBY 8.7.1.02348	Obsolete
6	0.305.0300.01	CO CASING	
7	A.709.500	COMER SHIM KIT	
7	0.709.7500.00	RPBY A.709.500	Obsolete
8	N/A	NOT AVAILABLE	Replaced by A.305.501
9	0.305.3000.00	CO SHAFT 1" 3/4 Z20	
10	0.305.2000.00	CO SHAFT 1" 3/4 Z20	
11	N/A	NOT AVAILABLE	Replaced by A.305.501
12	8.6.6.00201	CO PLUG 3/8 (SOLID PLUG)	
13	826-848C	COMER 0.340.7101.00 DIPSTICK	S/N 1011370+
13	826-497C	COMER VENT #8.6.7.00269	S/N 1011369-
14	A.305.501	CO TRIAD GEAR Z20-Z24-Z24 M6.5 *	Contains 2 of gear #8 and 1 of gear #11
		Notes: Oil Type 80-90W Capacity 5.5 Pints	

Gearbox Divider (826-521C) ITG

Applies to Models: RCBM6610 SERIES 2 S/N 944730+

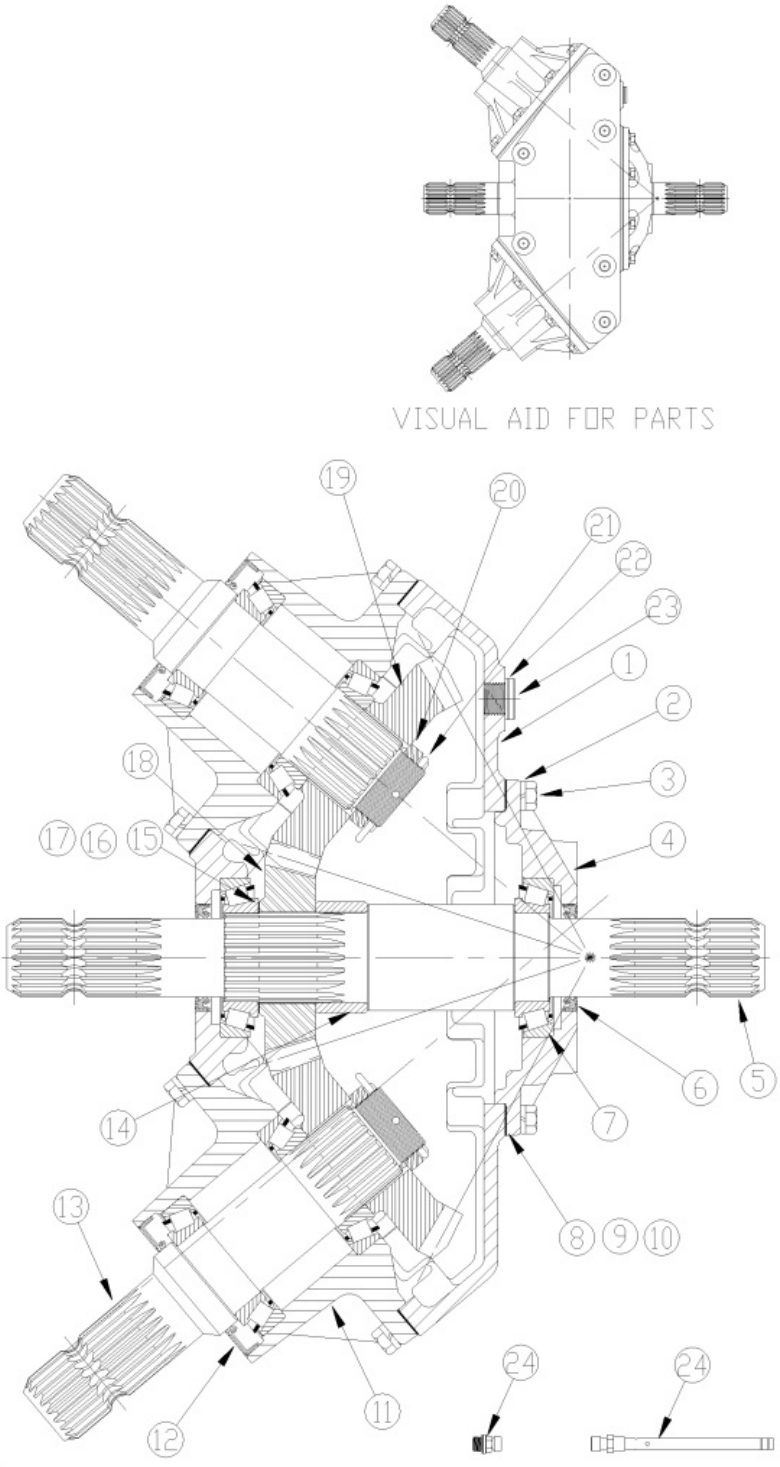

Gearbox Divider (826-521C) ITG

Applies to Models: RCBM6610 SERIES 2 S/N 944730+

Ref.	Part No.	Part Description	Comments
	DWG 25682	Image No.	
	826-521C	DIV BOX 1000RPM 1 3/4-20 *	
1	18-059	ITG HOUSING	
2	804-158C	WASHER SPRING LOCK M10 PLT	
3	06-003	ITG M10 X 1.5 X 30 CAP SCREW	
4	20-019	ITG INPUT CAP SPLITTER BOX	
5	02-038	ITG INPUT SHAFT	
6	05-007	ITG INPUT SHAFT OIL SEAL	
7	822-214C	BRG CUP/CONE SET 30210	Includes bearing and race
7	04-011	RPBY 822-214C	(Obsolete) Includes bearing and race
8	08-006	ITG INPUT CAP GASKET 0.10MM	
9	08-007	ITG INPUT CAP GASKET 0.25MM	
10	08-008	ITG IN & OUT CAP GASKET 0.45MM	
11	20-018	ITG HORIZONTAL HUB CAP	Obsolete
12	05-012B	ITG OUTPUT SEAL 58X95X10 THK	
13	02-039	ITG OUTPUT SHAFT	
14	10-001	ITG SPACER	
15	17-002	ITG GEAR ADJUSTING SHIM 0.30	
16	17-001	ITG SHIM 0.2	
17	17-003	ITG GEAR ADJUSTING SHIM 0.50	
18	03-126	19 TOOTH GEAR	
19	03-127	ITG 23 TOOTH GEAR	
20	11-012	ITG BRG ADJ. NUT	
21	12-008	ITG COTTER PIN	
22	07-022	ITG SEALING WASHER	
23	09-013	ITG DRAIN PLUG	
24	16-110	ITG M18X1.5 DIP STICK BREATHER	S/N _____+
24	09-011	ITG M18 X 1.5P PLUG VENTED *	S/N _____-
		Notes: Oil Type 80-90W Capacity 5.5 Pints	

Hydraulic Cylinder (810-671C) Red Lion

Applies to Models: RCBM6610 SERIES 2 S/N 944730+, RCB6610 SERIES 2 S/N 944730+

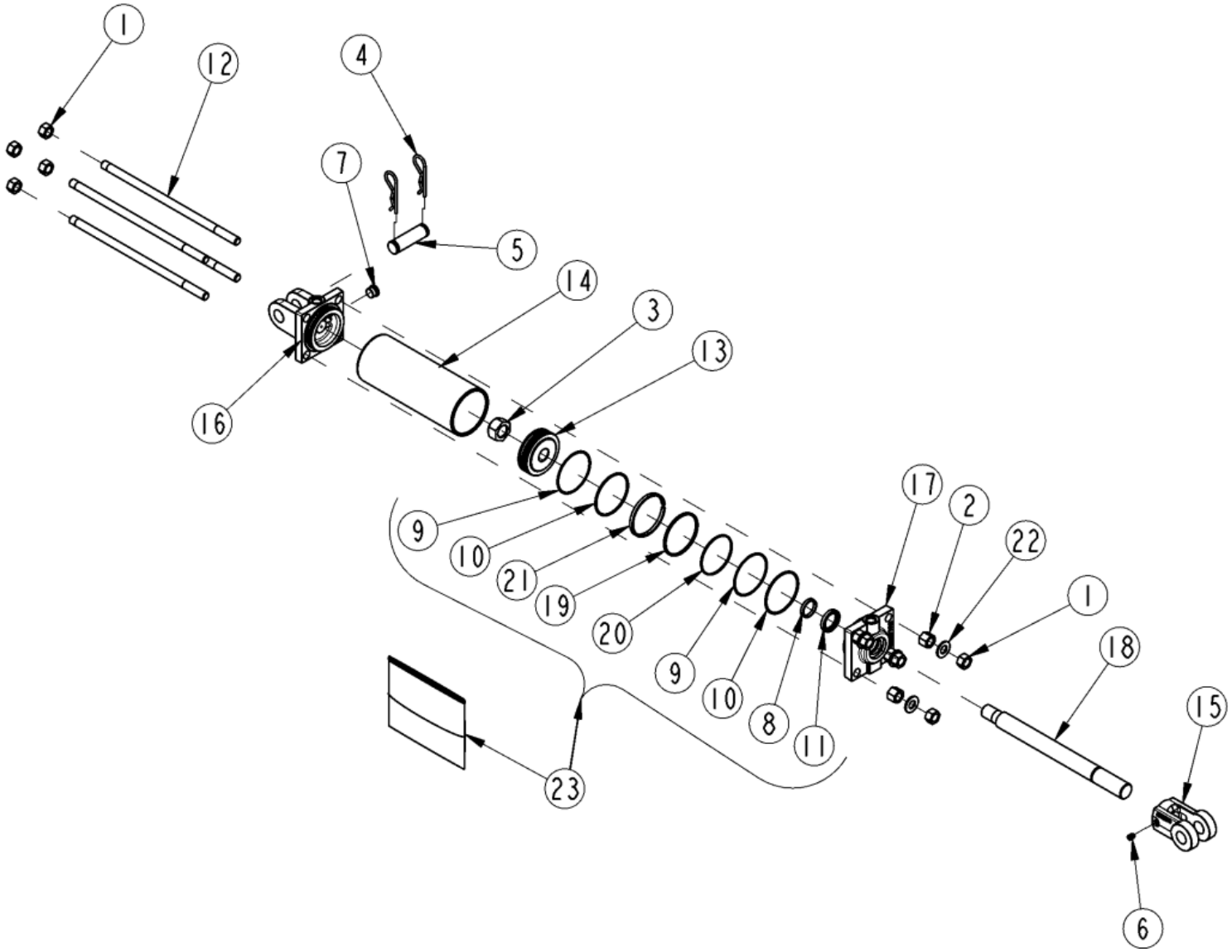

Hydraulic Cylinder (810-671C) Red Lion

Applies to Models: RCBM6610 SERIES 2 S/N 944730+, RCB6610 SERIES 2 S/N 944730+

Ref.	Part No.	Part Description	Comments
	DWG 27885	Drawing Image Number	
	810-671C	CYL 3.5X8X1.25 ROD (TIE ROD) *	Complete assembly
1	803-022C	NUT HEX 5/8-18 PLT	
2	128300	MON TIE ROD NUT (LONG)	
3	130560	MON PISTON NUT	
4	134950	MON R-CLIP RETAINERS	
5	134953	LION PIN	
6	801-023C	SCREW SET SH 3/8-16X3/8 TYPE C	
7	186562	LION PLUG 3/4-16UNF SOCKET HD	
8	N/A	NOT AVAILABLE	Only available in Seal Kit #23
9	N/A	NOT AVAILABLE	Only available in Seal Kit #23
10	N/A	NOT AVAILABLE	Only available in Seal Kit #23
11	N/A	NOT AVAILABLE	Only available in Seal Kit #23
12	294028	MON TIE ROD	
13	294738	PISTON, 3.5 CYLINDER	
14	491798	LION CYL. TUBE 3.5 X 8	
15	492652	LION ROD CLEVIS 1 1/4 (1PIN)	
16	492676	LION CLEVIS CAP 3.5 ORB	
17	492677	LION ROD CAP 3.5 X 1 1/4 ORB	
18	492700	LION ROD 1.25 DIA. ASAE 8	
19	N/A	NOT AVAILABLE	Only available in Seal Kit #23
20	N/A	NOT AVAILABLE	Only available in Seal Kit #23
21	N/A	NOT AVAILABLE	Only available in Seal Kit #23
22	804-021C	WASHER FLAT 5/8 SAE PLT	
23	810-885C	MON SEAL KIT 620279	
23	639561	RPBY 810-885C	Obsolete

Hydraulic Cylinder (810-830C) Red Lion

Applies to Models: RCBM6610 SERIES 2 S/N 944730+, RCB6610 SERIES 2 S/N 944730+

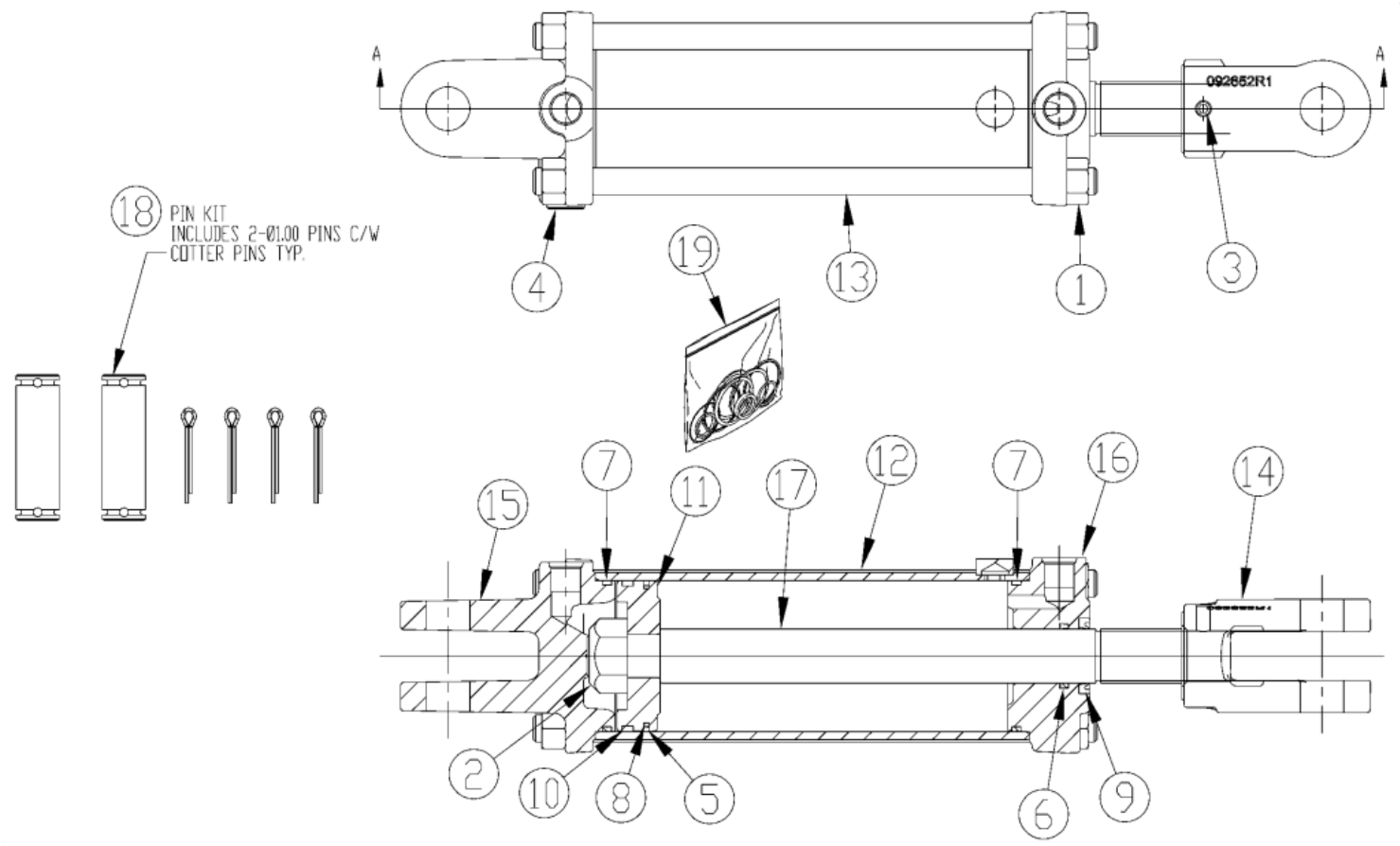

Hydraulic Cylinder (810-830C) Red Lion

Applies to Models: RCBM6610 SERIES 2 S/N 944730+, RCB6610 SERIES 2 S/N 944730+

Ref.	Part No.	Part Description	Comments
	DWG 33229	Drawing Image Number	
	810-830C	CYL REP 3.5X8X1.25 ROD (TIE) *	Complete assembly
1	803-022C	NUT HEX 5/8-18 PLT	
2	130560	MON PISTON NUT	
3	148202	MON SET SCREW	
3	148000	RPBY 148202	Obsolete
4	186562	LION PLUG 3/4-16UNF SOCKET HD	
5	N/A	NOT AVAILABLE	Only available in seal kit #19
6	N/A	NOT AVAILABLE	Only available in seal kit #19
7	N/A	NOT AVAILABLE	Only available in seal kit #19
8	N/A	NOT AVAILABLE	Only available in seal kit #19
9	N/A	NOT AVAILABLE	Only available in seal kit #19
10	N/A	NOT AVAILABLE	Only available in seal kit #19
11	294738	PISTON, 3.5 CYLINDER	
12	464267	MON TUBE WELDT 3.50-08.00-TP	
13	492338	LION TIE ROD 5/8 X 8	
14	492652	LION ROD CLEVIS 1 1/4 (1PIN)	
15	492676	LION CLEVIS CAP 3.5 ORB	
16	492677	LION ROD CAP 3.5 X 1 1/4 ORB	
17	492700	LION ROD 1.25 DIA. ASAE 8	
18	235005	MON PIN KIT 1.00C/W COTTER PIN	
19	810-885C	MON SEAL KIT 620279	
19	639561	RPBY 810-885C	Obsolete

Hydraulic Cylinder (810-831C) Red Lion

Applies to Models: RCBM6610 SERIES 2 S/N 944730+, RCB6610 SERIES 2 S/N 944730+

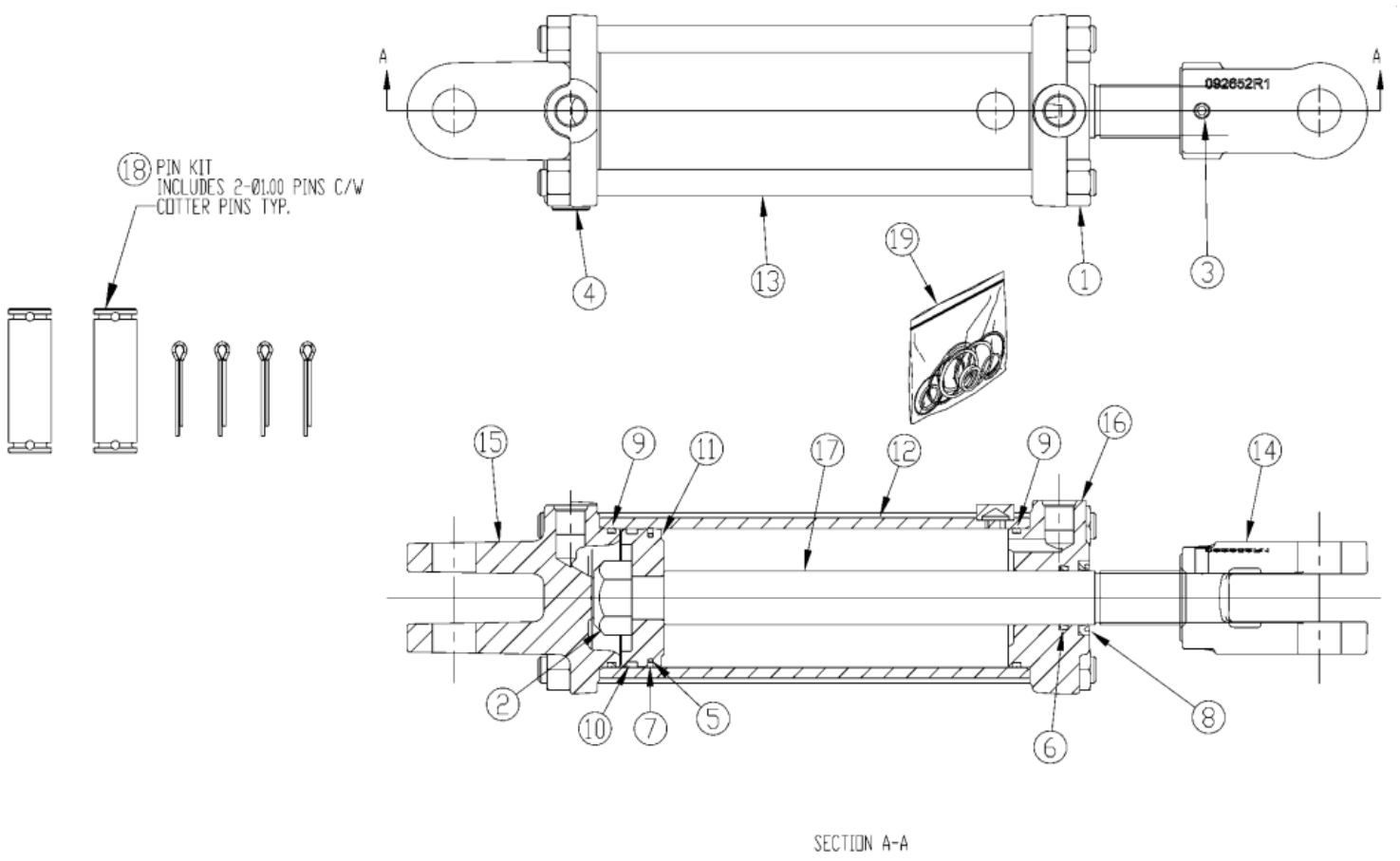

SECTION A-A

Hydraulic Cylinder (810-831C) Red Lion

Applies to Models: RCBM6610 SERIES 2 S/N 944730+, RCB6610 SERIES 2 S/N 944730+

Ref.	Part No.	Part Description	Comments
	DWG 33230	Drawing Image Number	
	810-831C	CYL REP 3.25X8X1.25 ROD (TIE) *	Complete assembly
1	803-022C	NUT HEX 5/8-18 PLT	
2	130560	MON PISTON NUT	
3	148202	MON SET SCREW	
3	148000	RPBY 148202	Obsolete
4	186562	LION PLUG 3/4-16UNF SOCKET HD	
5	N/A	NOT AVAILABLE	Only available in Seal Kit #19
6	N/A	NOT AVAILABLE	Only available in Seal Kit #19
7	N/A	NOT AVAILABLE	Only available in Seal Kit #19
8	N/A	NOT AVAILABLE	Only available in Seal Kit #19
9	N/A	NOT AVAILABLE	Only available in Seal Kit #19
10	N/A	NOT AVAILABLE	Only available in Seal Kit #19
11	294737	MON PISTON 3.25-1.00-TP	
12	464266	MON TUBE WELDT 3.25-08.00-TP	
13	492338	LION TIE ROD 5/8 X 8	
14	492652	LION ROD CLEVIS 1 1/4 (1PIN)	
15	492662	MON CLEVIS CAP 3.25-3/4ORB-1.0	
16	492664	MON ROD CAP 3.25-1.25-3/4ORB	
17	492700	LION ROD 1.25 DIA. ASAE 8	
18	235005	MON PIN KIT 1.00C/W COTTER PIN	
19	639560	MON SEAL KIT 32TP08-125	

Hydraulic Cylinders & Components

Applies to Models: RCBM6610 SERIES 2 S/N 944730+, RCB6610 SERIES 2 S/N 944730+

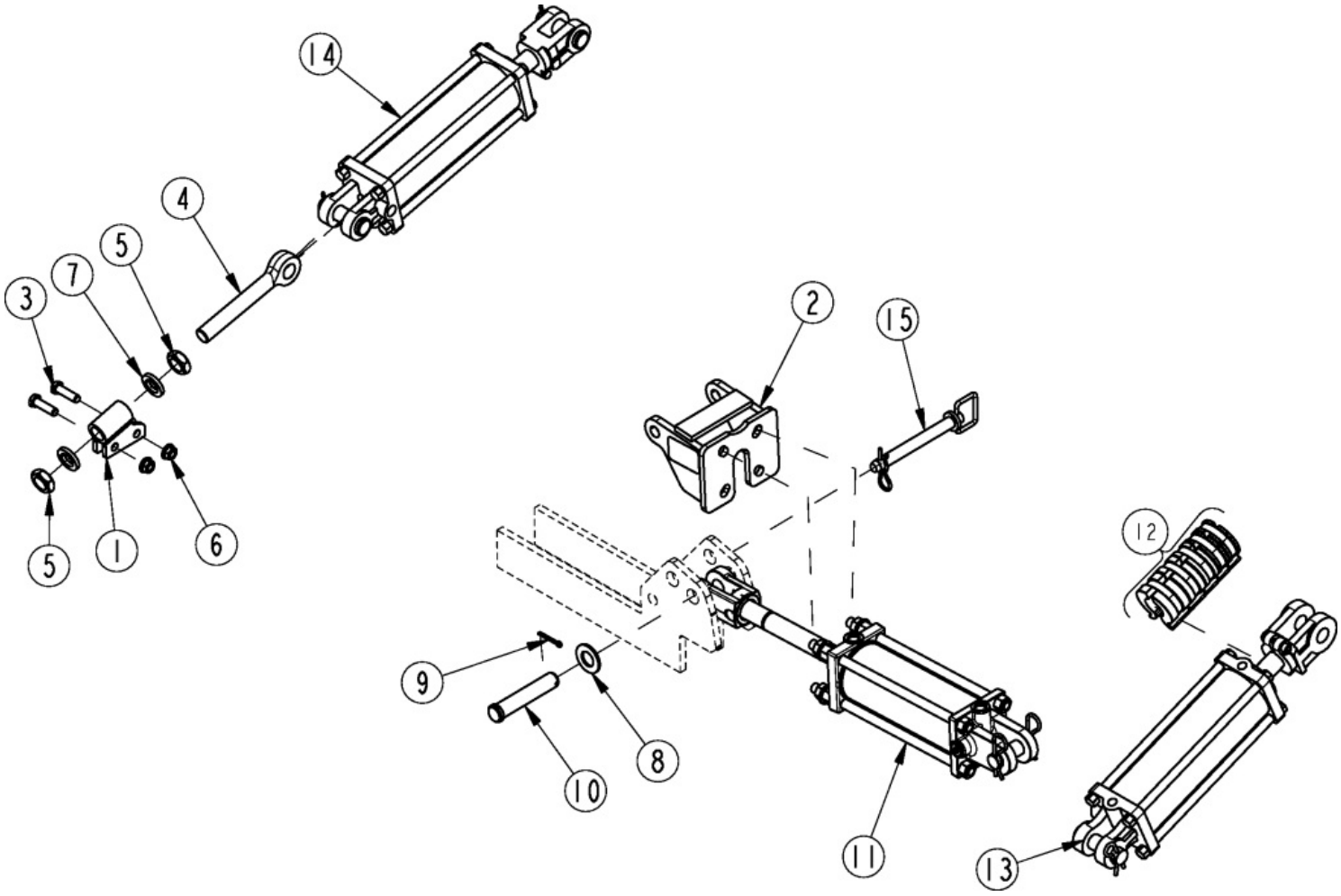

Hydraulic Cylinders & Components

Applies to Models: RCBM6610 SERIES 2 S/N 944730+, RCB6610 SERIES 2 S/N 944730+

Ref.	Part No.	Part Description	Comments
	DWG27888	Drawing Image Number	
1	330-230H	MOUNT TANDEM ADJ	
2	330-586S	TRANSPORT LOCK, DBL ACTING	
3	802-082C	HHCS 1/2-13X1 3/4 GR5 FTHD	
4	802-754C	EYE BOLT 1-8X7 1/2 LG PLT SP	
5	803-030C	NUT HEX JAM 1-8 PLT	
6	803-037C	NUT HEX WHIZ 1/2-13 PLT GR5	
7	804-027C	WASHER LOCK SPRING 1 PLT	
8	804-029C	WASHER FLAT 1 SAE	
9	805-104C	PIN COTTER 3/16 X 1 1/2 PLT	
10	805-131C	PIN CLVS 1.0X4.69 USBL	
11	810-671C	CYL 3.5X8X1.25 ROD (TIE ROD)	
12	810-818C	STRK CNTRL SPCRS 1.125 TO 1.50	
13	810-830C	CYL REP 3.5X8X1.25 ROD (TIE)	
14	810-831C	CYL REP 3.25X8X1.25 ROD (TIE)	
15	805-425C	PIN HTCH .75X6.25 USBL W/PIN	

Hydraulic Plumbing Components

Applies to Models: RCBM6610 SERIES 2 S/N 944730+, RCB6610 SERIES 2 S/N 944730+

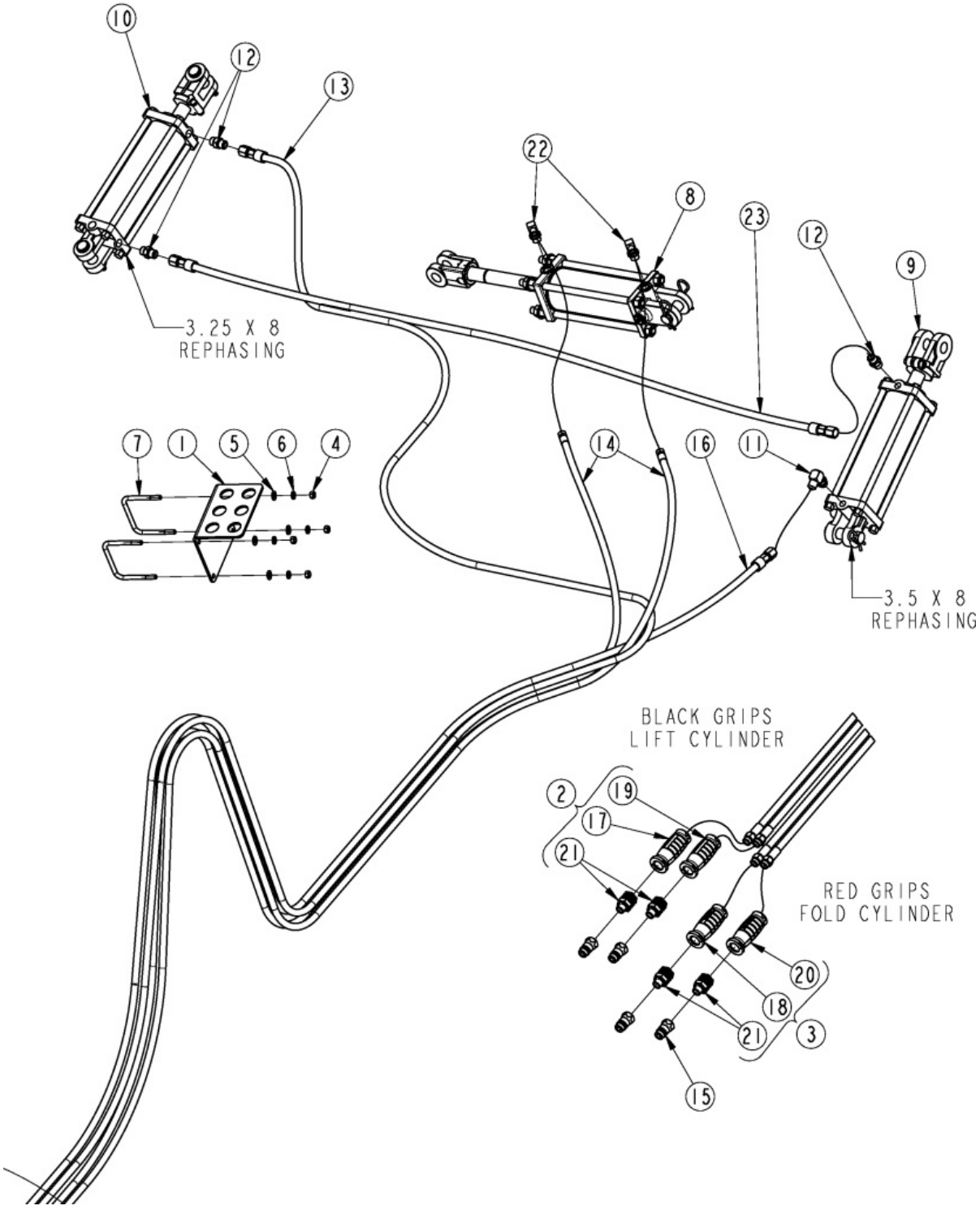

Hydraulic Plumbing Components

Applies to Models: RCBM6610 SERIES 2 S/N 944730+, RCB6610 SERIES 2 S/N 944730+

Ref.	Part No.	Part Description	Comments
	DWG 39154	Image No.	
1	330-836D	BOLT ON HOSE HOLDER	
2	548-001S	HG PAIR - BLACK MORB-FORB	
3	548-002S	HG PAIR - RED MORB-FORB	
4	803-014C	NUT HEX 3/8-16 PLT	
5	804-012C	WASHER FLAT 3/8 SAE PLT	
6	804-013C	WASHER LOCK SPRING 3/8 PLT	
7	806-138C	U-BOLT 3/8-16 X 4 1/32 X 3 3/4	
8	810-671C	CYL 3.5X8X1.25 ROD (TIE ROD)	
9	810-830C	CYL REP 3.5X8X1.25 ROD (TIE)	
10	810-831C	CYL REP 3.25X8X1.25 ROD (TIE)	
11	811-063C	EL 3/4MJIC 3/4MORB	
12	811-088C	AD 3/4MORB 3/4MJIC	
13	861-074C	HH3/8R1 270 3/4FJIC 3/4MORB	S/N 1099403+
13	811-101C	HH3/8R1 249 3/4FJIC 3/4MORB	S/N 1099402-
14	851-167C	HH3/8R1 208 3/4MORB 9/16FJIC	S/N 1099403+
14	811-238C	HH3/8R1 189 9/16FJIC 3/4MORB	S/N 1099402-
15	811-394C	CP 3/4FORB MALE QD POPPET TYPE	
16	811-786C	HH3/8R1 190 3/4MORB 3/4FJIC	S/N 1099403+
16	811-619C	HH3/8R1 168 3/4MORB 3/4FJIC	S/N 1099402-
17	811-826C	HG HANDLE - BLACK EXT	
18	811-827C	HG HANDLE - RED RET	
19	811-913C	HG HANDLE - BLACK RET	
20	811-914C	HG HANDLE - RED EXT	
21	811-919C	AD 3/4MORB 3/4FORB (HG)	
22	841-284C	OREL 1/16 9/16MJIC 3/4MORB	
23	841-308C	1.2/8R1 084 3/4FJIC	

Decals

Applies to Models: RCBM6610 SERIES 2 S/N 944730+, RCB6610 SERIES 2 S/N 944730+

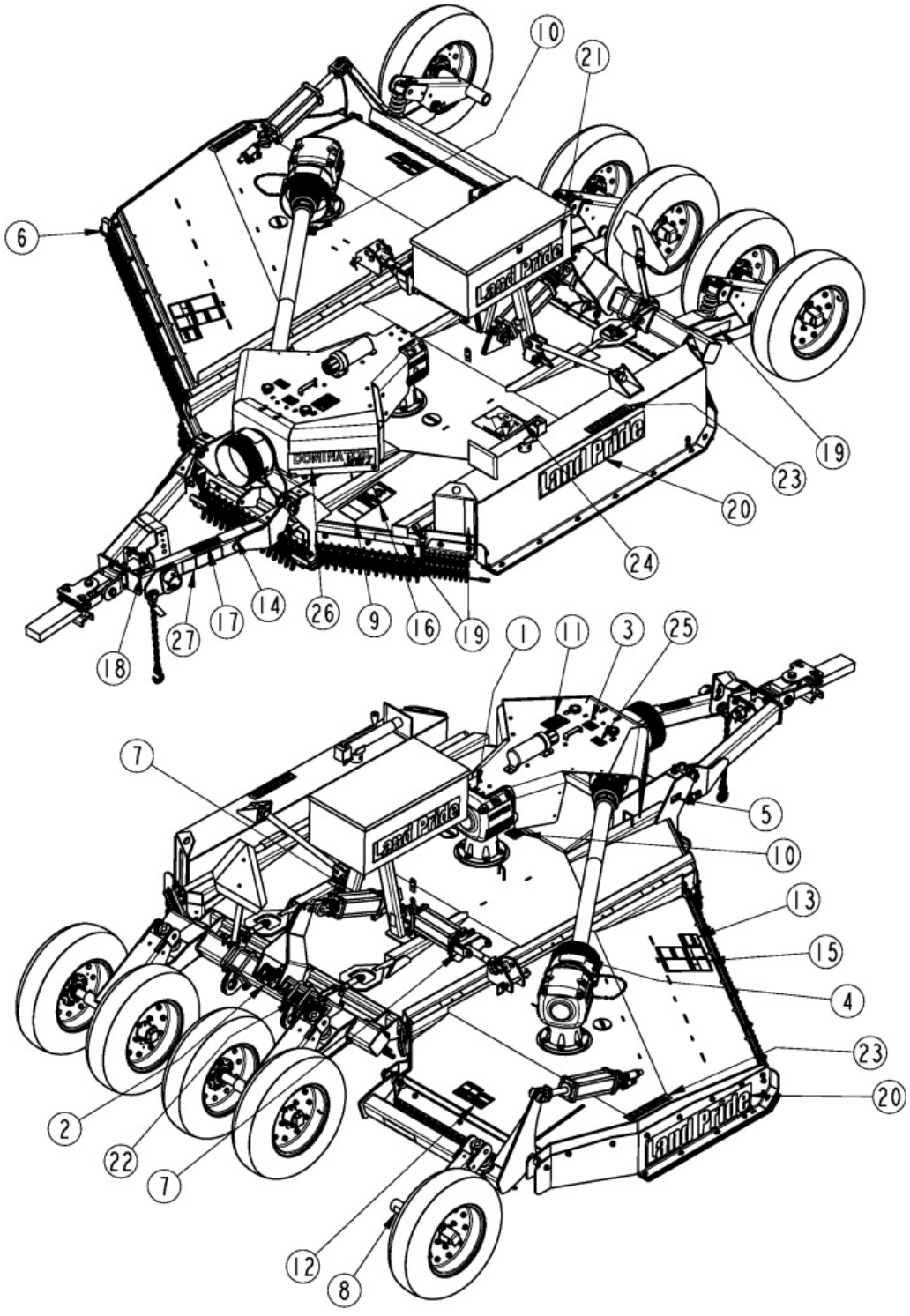

Decals

Applies to Models: RCBM6610 SERIES 2 S/N 944730+, RCB6610 SERIES 2 S/N 944730+

Ref.	Part No.	Part Description	Comments
	DWG 39156	Image No.	
1	818-042C	DECAL PATENT PENDING	
2	818-045C	DECAL WARNING PINCH PT/CRUSH	
3	818-130C	DECAL WARNING 540 RPM	
4	818-142C	DECAL DANGER PTO DRIVELINE EN	
5			
6	818-229C	DECAL AMBER REFLECTOR	
7	818-230C	DECAL RED REFLECTOR	
8	818-230C	DECAL RED REFLECTOR	
9	818-276C	DECAL WARNING OPERATING ANGLE	
10	818-543C	DECAL DANGER PD GUARD MISS SML	
11	818-552C	DECAL DANGER PTO DRIVELINE	
12	818-556C	DECAL DANGER THROWN OBJ CUTTER	
13	818-561C	DECAL DANGER RAISED WING HAZAR	
14	818-714C	DECAL DANGER CRUSHING TWO IMP	
15	818-830C	DECAL SAFETY COMBO SUNWEST	S/N 1538168-
15	858-949C	DECAL CUTTER SAFETY COMBO	S/N 1538169+
16	818-840C	DECAL WARNING ROLLOVER HAZARD	
17	838-094C	DECAL WARNING HYD PRESS LONG	
18	838-588C	FOLDING CUTTER SPEED WARNING	
19	838-615C	DECAL REFLECTOR AMBER 2X9	
20	848-122C	DECAL LANDPRIDE 34" TAN/BROWN	S/N _____+
20	838-959C	RPBY 848-122C	(Obsolete) S/N _____-
21	848-128C	DECAL LANDPRIDE 25-GOLD	
22	848-161C	DECAL LANDPRIDE 13.25 BRWN/GLD	
23	848-305C	DECAL RCB6610 GREEN	S/N _____-
23	848-306C	DECAL RCBM6610 GREEN	S/N _____-
23	848-307C	DECAL RCB6610 GOLD	S/N _____+
23	848-308C	DECAL RCBM6610 GOLD	S/N _____+
24	848-843C	DECAL BLADE ROTATION	
24	848-077C	DECAL BLADE ROTATION	For reverse blades
25	848-872C	DECAL 7 YEAR GEARBOX WARRANTY	
26	858-252C	DECAL DOMINATOR 2	
27	858-381C	DECAL JACK ADJUSTMENT	

Touch-up Paints - LP

Applies to Models: RCBM6610 SERIES 2 S/N 944730+, RCB6610 SERIES 2 S/N 944730+

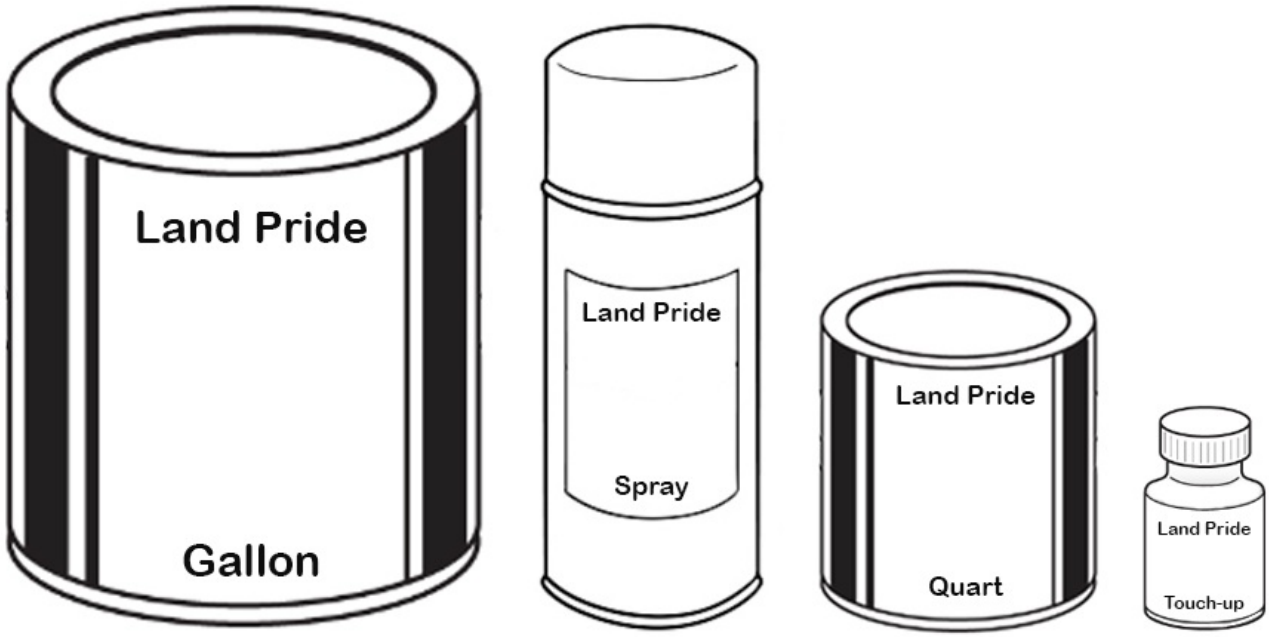

Touch-up Paints - LP

Applies to Models: RCBM6610 SERIES 2 S/N 944730+, RCB6610 SERIES 2 S/N 944730+

Ref.	Part No.	Part Description	Comments
	DWG 76585	Image No.	
	821-011C	PAINT LP BEIGE SPRAY CAN	Beige spray can
	821-070C	PAINT GP GLOSS BLACK SPRAY CAN	Black spray can
	821-054C	PAINT MED. RED SPRAY TRCK/CTR	Red spray can
	821-058C	PAINT GREEN SPRAY CUTTERS	Green spray can
	821-066C	PAINT ORANGE SPRAY CAN	Orange spray can
	821-067C	PAINT BLUE SPRAY CAN	Blue spray can
	821-080C	PAINT ALUMINUM/ZINC SPRAY CAN *	Aluminum/Zinc spray can
	821-011CTU	PAINT LP BEIGE TOUCH-UP 4OZ	Beige touch-up bottle with brush
	821-070CTU	PAINT GLOSS BLACK TOUCH-UP 4OZ	Black touch-up bottle with brush
	821-054CTU	PAINT MED RED TOUCH-UP 4OZ	Red touch-up bottle with brush
	821-058CTU	PAINT GREEN TOUCH-UP 4OZ	Green touch-up bottle with brush
	821-066CTU	PAINT ORANGE TOUCH-UP 4OZ	Orange touch-up bottle with brush
	821-067CTU	PAINT BLUE TOUCH-UP 5OZ	Blue touch-up bottle with brush
	821-080CTU	PAINT ALUMINUM/ZINC TOUCH UP *	Aluminum/Zinc touch-up bottle with brush
	821-011CQT	PAINT LP BEIGE QUART	Beige quart can
	821-070CQT	PAINT GP GLOSS BLACK QUART	Black quart can
	821-054CQT	PAINT MED RED QUART	Red quart can
	821-058CQT	PAINT GREEN QUART	Green quart can
	821-066CQT	PAINT ORANGE QUART	Orange quart can
	821-067CQT	PAINT BLUE QUART	Blue quart can
	821-080CQT	PAINT ALUMINUM/ZINC QUART *	Aluminum/Zinc quart can
	821-011CGL	PAINT LP BEIGE GALLON	Beige gallon can
	821-070CGL	PAINT GP GLOSS BLACK GALLON	Black gallon can
	821-054CGL	PAINT MED RED GALLON	Red gallon can
	821-058CGL	PAINT GREEN GALLON	Green gallon can
	821-066CGL	PAINT ORANGE GALLON	Orange gallon can
	821-067CGL	PAINT BLUE GALLON	Blue gallon can
	821-080CGL	PAINT ALUMINUM/ZINC GALLON	Aluminum/Zinc gallon can

Manual Winch Wing Deck

Applies to Models: RCBM6610 SERIES 2 S/N 944730+, RCB6610 SERIES 2 S/N 944730+

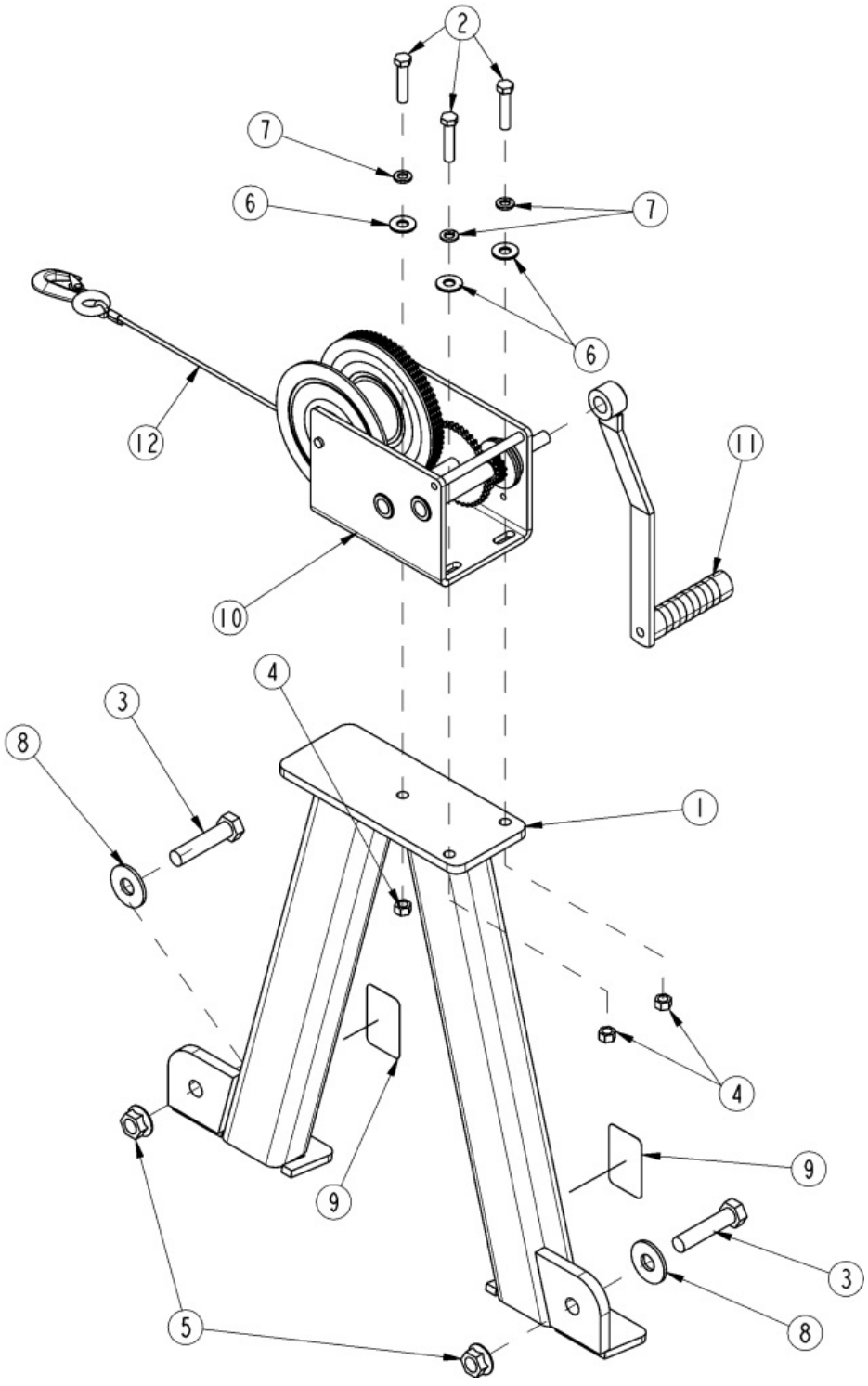

Manual Winch Wing Deck

Applies to Models: RCBM6610 SERIES 2 S/N 944730+, RCB6610 SERIES 2 S/N 944730+

Ref.	Part No.	Part Description	Comments
	DWG26943	Drawing Image Number	
	330-414A	MECHANICAL WINCH RC56 *	
1	330-413H	MECHANICAL WINCH	
2	802-023C	HHCS 3/8-16X1 3/4 GR5	
3	802-281C	HHCS 5/8-11X2 3/4 GR5	
4	803-013C	NUT LOCK 3/8-16 PLT	
5	803-263C	NUT HEX FLANGE LOCK 5/8-11 PLT	
6	804-011C	WASHER FLAT 3/8 USS PLT	
7	804-013C	WASHER LOCK SPRING 3/8 PLT	
8	804-019C	WASHER FLAT 5/8 USS PLT	
9	818-230C	DECAL RED REFLECTOR	
10	890-671C	BRAKE WINCH DLB2000	
11	890-679C	WINCH HANDLE 12" DBL2000	
12	890-680C	WINCH CABLE AND HOOK	

Off Center Lights 3.5 Inch (LED) Retro-Fit

Applies to Models: RCBM6610 SERIES 2 S/N 944730+, RCB6610 SERIES 2 S/N 944730+

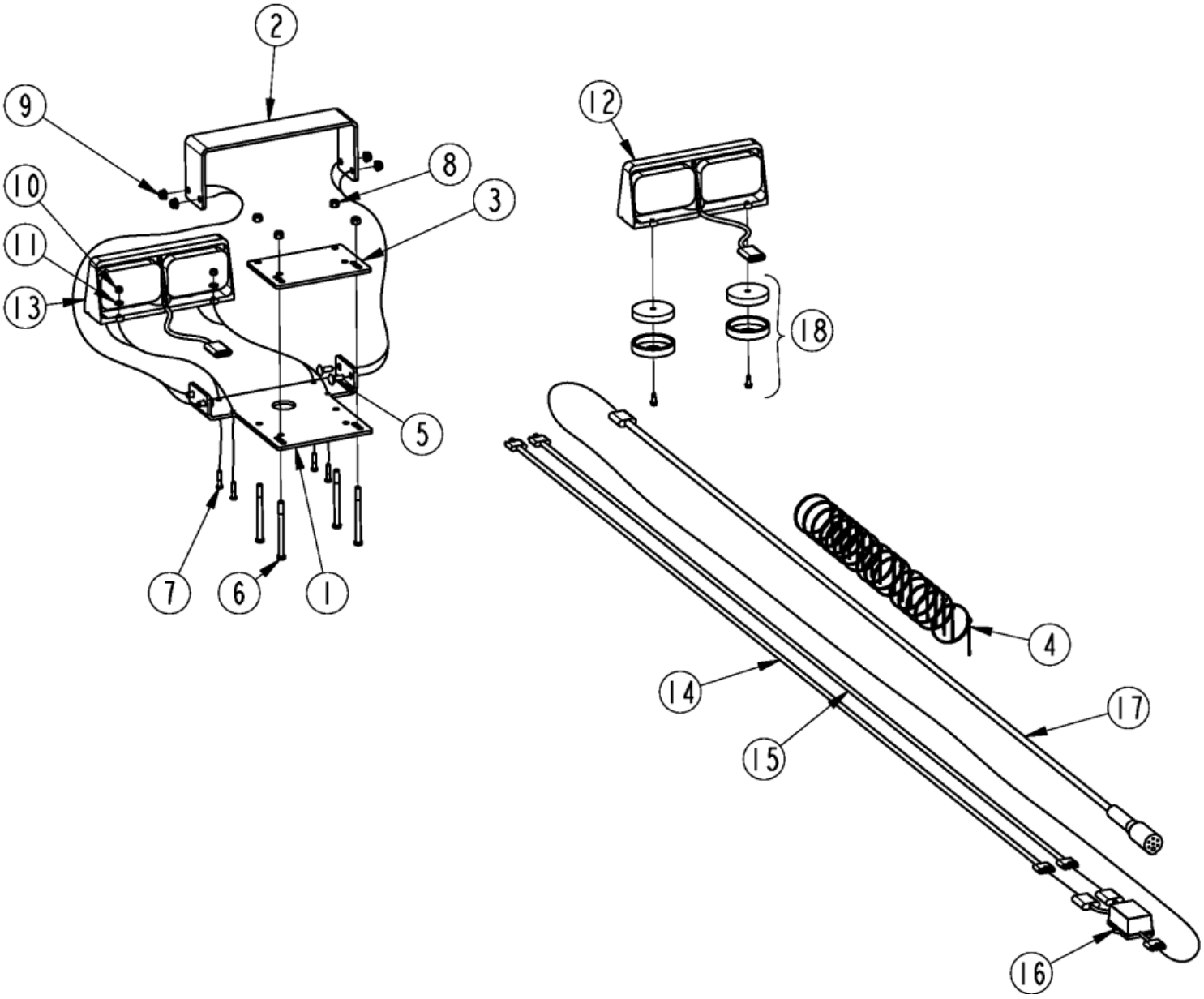

Off Center Lights 3.5 Inch (LED) Retro-Fit

Applies to Models: RCBM6610 SERIES 2 S/N 944730+, RCB6610 SERIES 2 S/N 944730+

Ref.	Part No.	Part Description	Comments
	DWG 39037	Image No.	
	334-580A	OFFSET CUTTER LIGHT KIT 3.5"	Includes 334-497L & 334-574M
	334-497L	OFFSET CUTTER LIGHT KIT 3.5"	
	334-574M	ROTARY CUTTER LIGHT KIT MANUAL *	Kit manual
1	330-965D	LIGHT MNT	
2	330-966D	LIGHT GUARD	
3	330-967D	LIGHT MNT CLAMP	
4	800-060C	CABLE TIE .19X14.25 3DIA 50LB	
5	802-015C	RHSNB 3/8-16X1 GR5	
6	802-318C	HHCS 3/8-16X5 GR5	
7	802-224C	HHCS 1/4-20X1 1/4 GR5	
8	803-078C	NUT LOCK 3/8-16 NYLON INSERT	
9	803-209C	NUT FLANGE LOCK 3/8-16 PLT	
10	803-255C	NUT HEX NYLOCK 1/4-20	
11	804-007C	WASHER FLAT 1/4 SAE PLT	
12	891-522C	DUAL LED LIGHT LH	Complete light assembly
12	J-37-R	RED LED LENS MODULE	Red lens
12	J-37-A	AMBER LED LENS MODULE	Amber lens
12	J-AC1-15-B	BLACK LENS COVER	Black lens
13	891-523C	DUAL LED LIGHT RH	Complete light assembly
13	J-37-R	RED LED LENS MODULE	Red lens
13	J-37-A	AMBER LED LENS MODULE	Amber lens
13	J-AC1-15-B	BLACK LENS COVER	Black lens
14	891-529C	LIGHT WIRE HARNESS 8'	
15	891-530C	RPBY 891-529C	Obsolete
16	891-531C	ENHANCE MODULE	
17	891-532C	LEAD WIRE HARNESS 8'	
18	891-534C	LIGHT MAGNETS WITH HARDWARE	

Tire Options

Applies to Models: RCBM6610 SERIES 2 S/N 944730+, RCB6610 SERIES 2 S/N 944730+

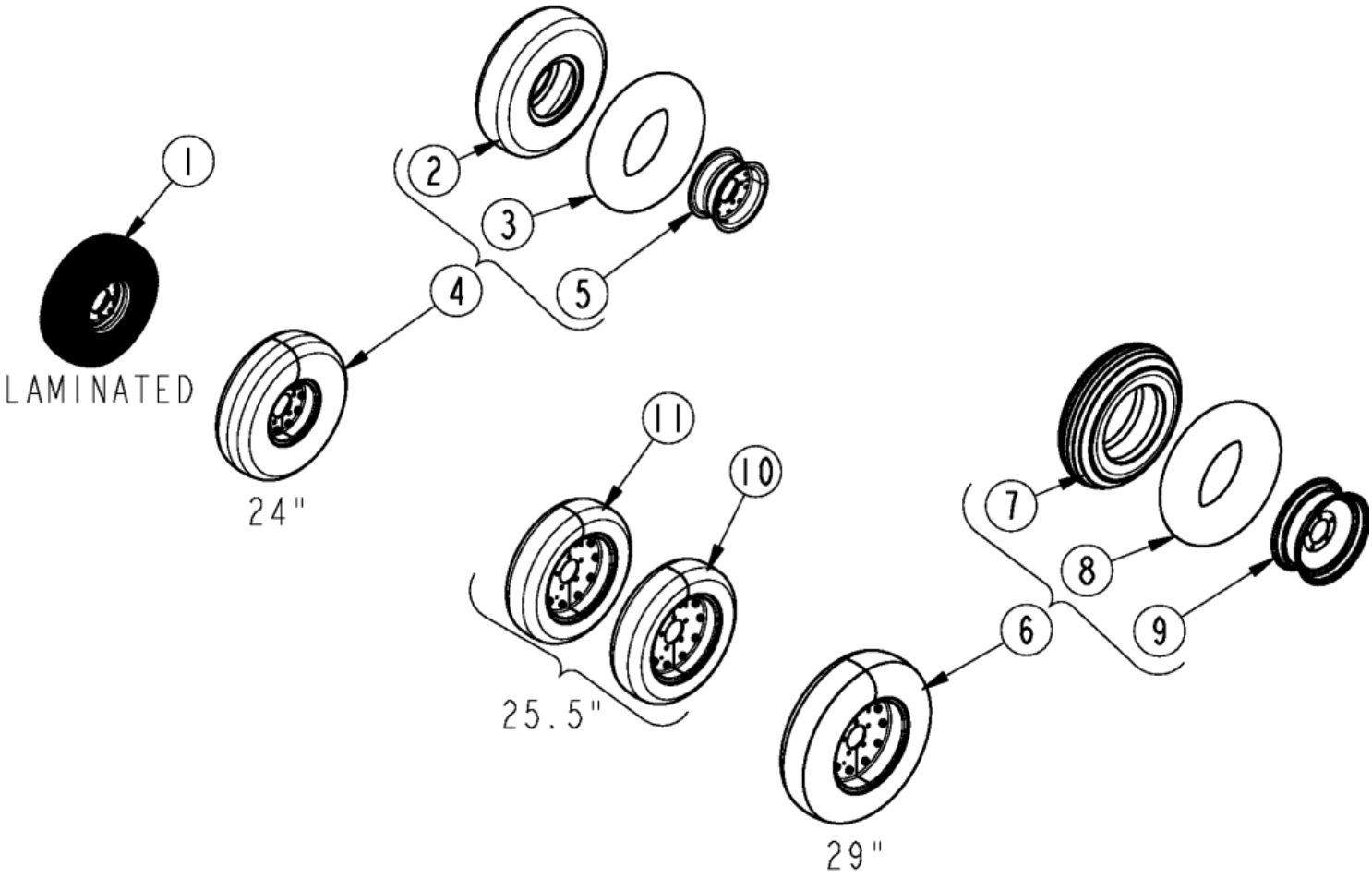

Tire Options

Applies to Models: RCBM6610 SERIES 2 S/N 944730+, RCB6610 SERIES 2 S/N 944730+

Ref.	Part No.	Part Description	Comments
	DWG 39126	Image No.	
1	814-265C	TIRE & WHL LAM. 6X9X21(5-BOLT)	
2	814-266C	TIRE 24X7.7-10	
3	814-268C	TUBE FOR 24X7.7-10	
4	814-285C	AC TIRE 24 X 7.7 2PC. 5-BOLT	
5	814-296C	RIM 2PC 5BLT 10X6	
6	814-449C	TIRE, AC 29" 16 PLY 5 BOLT	
7	814-450C	TIRE H29X9.0X15 USED	
8	814-451C	TUBE FOR 814-204C/293C/449C	
9	814-461C	RIM 2PC 5BLT 15X6.5	
10	814-478C	NEW TIRE FF 25.5X8-14 20PLY	
11	814-480C	NEW TIRE 25.5X8-14 20PLY	

Toolbox

Applies to Models: RCBM6610 SERIES 2 S/N 944730+, RCB6610 SERIES 2 S/N 944730+

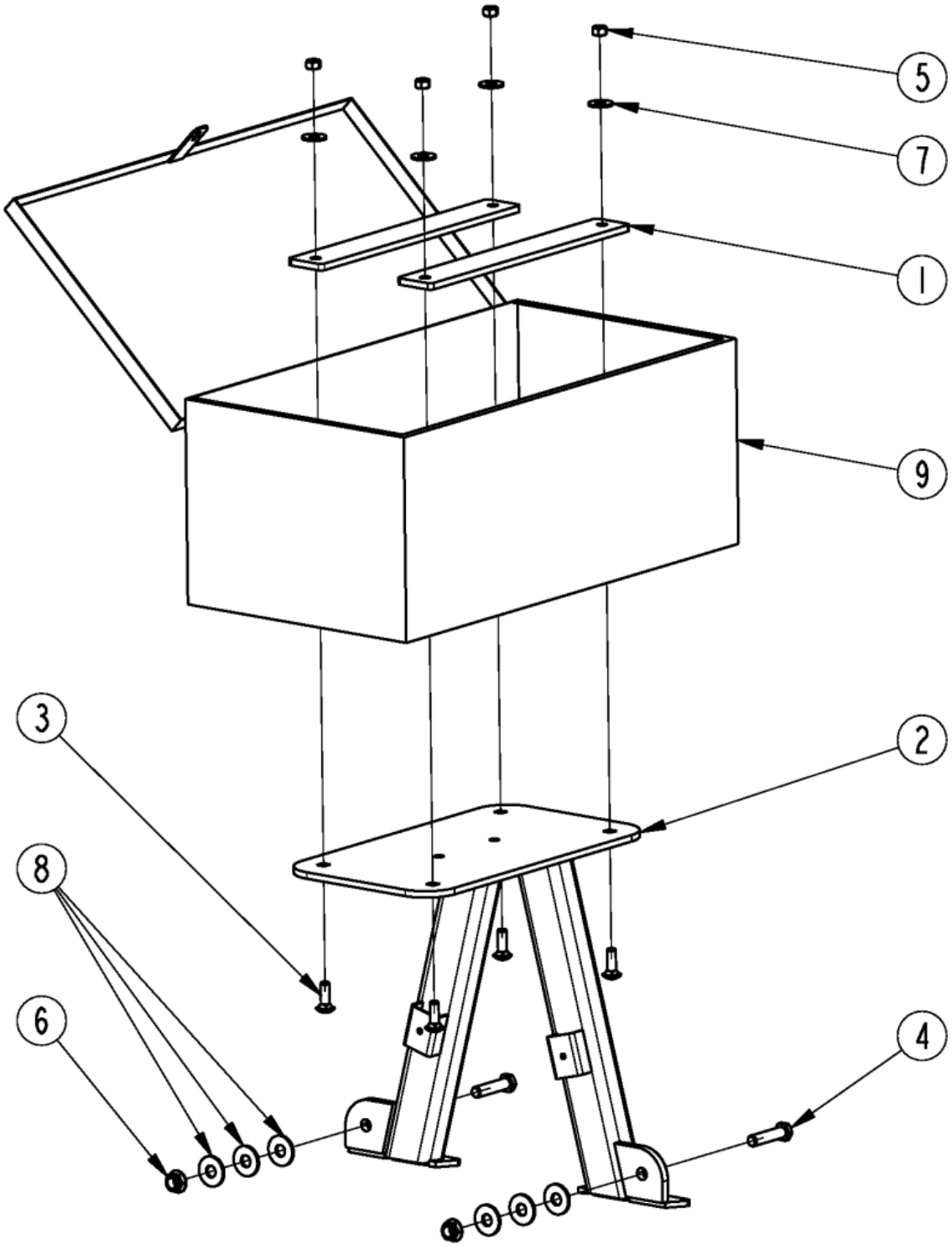

Toolbox

Applies to Models: RCBM6610 SERIES 2 S/N 944730+, RCB6610 SERIES 2 S/N 944730+

Ref.	Part No.	Part Description	Comments
	DWG 39097	Image No.	
	330-869A	TOOLBOX	
1	331-135D	TOOLBOX DOUBLER PLATE	
2	331-647H	TOOLBOX PEDESTAL	
3	802-106C	RHSNB 1/2-13X1 1/2 GR5	
4	802-281C	HHCS 5/8-11X2 3/4 GR5	
5	803-019C	NUT LOCK 1/2-13 PLT	
6	803-263C	NUT HEX FLANGE LOCK 5/8-11 PLT	
7	804-017C	WASHER FLAT 1/2 USS PLT	
8	804-019C	WASHER FLAT 5/8 USS PLT	
9	891-252C	TOOLBOX	

Part Number Index

Part Number	Page
0.121.7101.00	90, 92, 94, 96, 98, 100
0.252.7525.00	90, 92, 94, 96, 98, 100
0.285.7510.00	90, 92, 94, 96, 98, 100
0.288.7101.00	90, 92, 94, 96, 98, 100
0.305.0300.01	102, 106
0.305.1300.00	102, 106
0.305.2000.00	102, 106
0.305.3000.00	102, 106
0.709.7500.00	90, 92, 106
0.712.7500.00	90, 92
02-038	104, 108
02-039	104, 108
03-126	104, 108
03-127	104, 108
03-15316	78, 80, 82, 84
03-15570	78, 80, 82, 84
04-011	104, 108
044321	74, 76
05-007	104, 108
05-012B	104, 108
06-003	104, 108
07-022	104, 108
08-006	104, 108
08-007	104, 108
08-008	104, 108
087276	74, 76
09-011	104, 108
09-013	104, 108
097133	74, 76
097140	74, 76
1.181.7101.00	90, 92, 94, 96, 98, 100
10-001	104, 108
11-012	104, 108
11-14988	78, 80, 82
11-15180	78, 80, 82
12-008	104, 108
123.386.190.01	86
123.486.343.01	86
128300	110
130560	110, 112, 114
13-10021	84
13-10022	84
13-15249	84
134950	110
134953	110
141.026.357.1	88
141.028.195.1	86
142.283.2509821	86
142.286.2519821	86
142.287.2199821	86
146.264.024.1	88
146.284.020.1	86
148000	112, 114
148202	112, 114
150.281.5197810	86
151.016.037.1	88
151.016.896.1	88
151.018.016.1	86
151.018.228.1	86, 88
151.018.241.1	86
151.018.242.1	86
155.150.724	88
159.280.168	86
16-110	104, 108
165.000.548	86, 88
165.000.589	86, 88
170.016.630.1	88
17-001	104, 108
17-002	104, 108
17-003	104, 108
180.014.022	86, 88
180.014.240	86
180.016.780	88
180.018.251	86
180.018.252	86
180.018.393	86
180.018.435	86
180.018.581	86
180.019.014	86, 88
180.019.019	86, 88
180.019.115	86, 88
180.019.116.1	86, 88
180.019.340	86, 88
18-059	104, 108
186562	110, 112, 114
190.000.016	88
190.000.032	88
190.000.035	86
190.000.047	86, 88
190.000.098	86
190.000.099	86
190.000.243	86
190.000.271	86
190.000.932	86
19-15121	84
19-15135	78, 80, 82
200-001D	54
20-018	104, 108
20-019	104, 108
235005	112, 114
26-13387	82
26-15120	78, 80, 84
26-16033	78, 80, 82, 84
294028	110
294737	114
294738	110, 112
304011	74, 76
304046	74, 76
312209	74, 76
318-000D	72
318-005H	26
318-006H	24, 26
318-053L	24, 26
318-107D	58, 62, 66
318-108D	60, 64, 68
318-129D	72
318-190D	4
318-337D	58, 62, 66
318-358H	18
318-478D	60, 64, 68
318-556H	24
318-586A	4
318-606D	62
318-617D	58, 62, 66
318-620K	62
318-636D	58, 66
318-657D	70
318-695L	34
318-696H	10, 34
318-707K	58
318-728K	70
318-756D	34
318-757D	34
318-766H	4
318-834H	18
318-917D	70
318-918D	70

Part Number	Page
318-920S	8
318-923D	34
318-924D	72
318-925D	72
318-927D	10
318-929D	64
318-930D	60, 68
318-931D	62
318-932D	58, 66
318-952D	72
318-965D	62
318-966D	58, 66
321256	74
325027	74, 76
326-099D	58, 62, 66
326-152D	34
326-224D	34
326-535D	60, 64, 68
330-050D	64
330-051D	60, 68
330-155K	66
330-185H	6
330-186H	6
330-186H81	6
330-186H82	6
330-186H83	6
330-186H86	6
330-189H	6
330-189H81	6
330-189H82	6
330-189H83	6
330-189H86	6
330-195H	28
330-196L	28
330-223H	24, 26
330-225A	26
330-230H	116
330-234K	64
330-235K	60
330-236K	68
330-237K	62
330-238K	58
330-239K	66
330-271H	18, 20, 22
330-273K	62
330-274K	58
330-275K	66
330-289H	38
330-293H	44
330-316K	70
330-317K	70
330-318K	72
330-319K	72
330-320K	72
330-328D	34
330-331D	36, 38, 40, 42, 44
330-333A	18
330-334A	24
330-335A	16
330-345H	36
330-348H	16
330-406H	34
330-410H	34
330-413H	124
330-414A	124
330-415H	36, 38, 40
330-449K	64
330-450K	60
330-451K	68
330-503H	42
330-512A	62
330-513A	70
330-514A	58
330-515A	66
330-524A	64
330-525A	72
330-526A	60
330-527A	68
330-563D	18
330-564D	18
330-586S	116
330-597D	60, 64, 68
330-607H	36
330-608H	42
330-609S	36
330-610S	42
330-615S	38, 44
330-616H	38, 44
330-835D	10
330-836D	118
330-869A	130
330-919K	34
330-920K	34
330-938K	36, 38, 40, 42, 44, 54
330-965D	30, 126
330-966D	30, 126
330-967D	30, 126
330-974K	18
330-975H	18
331-076D	32
331-087D	14
331-088D	14
331-089D	14
331-099H	36
331-120H	10
331-133D	56
331-135D	130
331-202H	38, 40, 44
331-203H	10
331-203H81	10
331-203H82	10
331-203H83	10
331-203H86	10
331-204H	10
331-204H81	10
331-204H82	10
331-204H83	10
331-204H86	10
331-207H	10
331-543D	20, 22
331-552V	32
331-554H	8, 32
331-555S	32
331-561H	14
331-579H	14
331-580H	8
331-581H	8
331-646S	56
331-647H	130
331-683A	30
331-709H	40
331-757H	40
331-794H	42
331-795L	42
333645	76
334-045A	20, 22
334-046H	20, 22
334-048H	20, 22
334-252K	10
334-252K81	10
334-252K82	10
334-252K83	10
334-252K86	10
334-448H	36
334-449S	36
334-464H	42

Part Number	Page
334-465H	38, 40, 44
334-466S	42
334-467S	38, 44
334-497L	30, 126
334-574M	126
334-580A	126
334-725H	40
337-067S	46, 48, 50, 52
337-072K	46
337-073K	48
337-074K	50
337-075K	52
339107	74
355155	74, 76
359474	74, 76
362428	74
362430	76
364915	74, 76
365305	74, 76
377437	74, 76
377442	74
380371	74, 76
387768	76
388957	74
389850	74
390257	74
39-10039	84
391409	76
391410	76
464266	114
464267	112
491798	110
492338	112, 114
492652	110, 112, 114
492662	114
492664	114
492676	110, 112
492677	110, 112
492700	110, 112, 114
548-001S	118
548-002S	118
55051-1817	78, 80, 82
639560	114
639561	110, 112
68810-1003	80, 84
68810-1004	78
68810-1005	82
702352	74, 76

Part Number	Page
8.0.9.00079	90, 92, 94, 96, 98, 100
8.0.9.00143	90, 92, 94, 96, 98, 100, 102, 106
8.0.9.01090	90, 92, 94, 96, 98, 100
8.1.1.00109	102, 106
8.1.1.00501	90, 92, 94, 96, 98, 100
8.2.2.00560	90, 92, 94, 96, 98, 100
8.4.7.01045	90, 92, 94, 96, 98, 100
8.4.7.02265	90, 92, 94, 96, 98, 100
8.5.1.00533	90, 92, 94, 96, 98, 100
8.5.2.00332	90, 92, 94, 96, 98, 100
8.5.2.01772	102, 106
8.6.5.00006	90, 92, 94, 96, 98, 100
8.6.5.00203	94, 96, 98, 100
8.6.6.00201	102, 106
8.7.1.02348	90, 92, 94, 96, 98, 100, 102, 106
8.7.1.02349	90, 92, 94, 96, 98, 100
8.7.3.00331	90, 92, 94, 96, 98, 100, 102, 106
800-001C	10, 14, 18, 20, 22, 36, 38, 40, 42, 44
800-060C	30, 126
800-073C	36, 38, 42, 44
800-080C	54
801-023C	110
801-229C	36, 38, 40, 42, 44
801-248C	32
802-005C	8
802-007C	8

Part Number	Page
802-015C	30, 72, 126
802-022C	10, 34
802-023C	124
802-053C	8, 16, 18, 20, 22, 24, 26
802-057C	8
802-058C	6
802-065C	4, 8, 12
802-070C	18
802-074C	18
802-075C	20, 22
802-079C	20, 22, 64
802-082C	36, 38, 40, 42, 44, 116
802-091C	34
802-096C	14
802-099C	36, 38, 40, 42, 44, 46, 48, 50, 52
802-106C	14, 34, 130
802-138C	8
802-143C	14, 36, 38, 40, 42, 44
802-148C	40
802-155C	10, 14
802-196C	56
802-205C	18
802-214C	10, 34, 58, 60, 62, 64, 66, 68, 70, 72
802-224C	30, 126
802-277C	4
802-281C	124, 130
802-282C	40, 56
802-301C	32
802-318C	30, 126
802-368C	34
802-466C	10, 34
802-552C	28
802-729C	24
802-754C	28, 116
802-779C	54
802-843C	32
802-877C	24, 26
802-967C	8

Part Number	Page
803-013C	14, 36, 38, 40, 42, 44, 124
803-014C	10, 14, 34, 118
803-019C	36, 38, 40, 42, 44, 46, 48, 50, 52, 130
803-020C	14
803-022C	110, 112, 114
803-024C	36, 38, 40, 56
803-025C	28
803-029C	54
803-030C	28, 116
803-031C	14
803-032C	34
803-037C	10, 34, 58, 60, 62, 64, 66, 68, 70, 72, 116
803-043C	40, 56
803-078C	30, 126
803-168C	14, 18
803-169C	36, 38, 40, 42, 44
803-170C	4
803-181C	4, 18
803-198C	10, 34, 72
803-201C	20, 22
803-209C	30, 64, 126
803-230C	40, 56
803-255C	8, 30, 32, 126
803-258C	18, 20, 22, 24, 26
803-263C	6, 8, 124, 130
803-299C	8, 12
803-301C	18, 20, 22
803-304C	16, 18, 20, 22, 24, 26
803-310C	36, 38, 42, 44, 54
803-316C	34, 40
803-381C	36, 38, 40, 42, 44

Part Number	Page
804-006C	32
804-007C	8, 30, 126
804-009C	8, 12, 32
804-010C	8, 12, 32
804-011C	14, 64, 124
804-012C	118
804-013C	10, 14, 20, 22, 34, 118, 124
804-015C	14
804-016C	8, 36, 38, 40, 42, 44
804-017C	130
804-019C	124, 130
804-021C	110
804-022C	8, 36, 38, 40, 56
804-025C	18, 24, 26
804-027C	14, 28, 116
804-028C	14, 18
804-029C	14, 28, 36, 38, 40, 116
804-034C	32
804-055C	54
804-147C	4
804-158C	104, 108
804-171C	18, 22
805-045C	24, 26
805-058C	36, 38, 40, 42, 44
805-083C	24, 26
805-104C	28, 36, 38, 40, 116
805-105C	18, 20, 22
805-131C	116
805-195C	10
805-246C	54
805-249C	14
805-292C	14, 36, 38, 40, 42, 44
805-374C	28, 36, 38, 40
805-425C	116
805-548C	14
806-138C	118
806-213C	36, 38, 40, 56

Part Number	Page
807-271C	36, 40, 42
810-671C	110, 116, 118
810-818C	116
810-830C	112, 116, 118
810-831C	114, 116, 118
810-885C	110, 112
811-063C	118
811-088C	118
811-101C	118
811-238C	118
811-394C	118
811-619C	118
811-786C	118
811-826C	118
811-827C	118
811-913C	118
811-914C	118
811-919C	118
814-265C	128
814-266C	128
814-268C	128
814-285C	128
814-296C	128
814-449C	128
814-450C	128
814-451C	128
814-461C	128
814-478C	128
814-480C	128
815-242C	54
815-243C	54
815-425C	36
815-433C	38, 40, 44
815-491C	42
815-616C	46, 48
815-617C	50, 52
815-618C	46, 48, 50, 52
816-246C	72
816-456C	70
816-481C	8
816-497C	54
816-606C	70
816-607C	70
816-608C	72
817-455C	8
817-936C	32
818-042C	120

Part Number	Page
818-045C	120
818-055C	40, 56
818-130C	120
818-142C	120
818-229C	120
818-230C	120, 124
818-276C	120
818-540C	74, 76
818-543C	120
818-552C	74, 76, 120
818-556C	120
818-561C	120
818-714C	120
818-830C	120
818-840C	120
820-168C	4
820-169C	4
820-170C	4
820-249C	4
820-478C	4
820-479C	4
820-724C	4
820-725C	4
820-726C	4
820-727C	4
821-011C	122
821-011CGL	122
821-011CQT	122
821-011CTU	122
821-054C	122
821-054CGL	122
821-054CQT	122
821-054CTU	122
821-058C	122
821-058CGL	122
821-058CQT	122
821-058CTU	122
821-066C	122
821-066CGL	122
821-066CQT	122
821-066CTU	122
821-067C	122
821-067CGL	122
821-067CQT	122
821-067CTU	122
821-070C	122
821-070CGL	122
821-070CQT	122
821-070CTU	122
821-080C	122
821-080CGL	122
821-080CQT	122
821-080CTU	122
822-020C	54
822-021C	54
822-033C	54
822-034C	54
822-214C	104, 108
826-112C	8, 74
826-247C	8, 76
826-322C	12, 90
826-324C	12, 92
826-486C	12, 90, 92, 94, 96, 98, 100
826-497C	102, 106
826-520C	8, 102, 104
826-521C	8, 106, 108
826-587C	74
826-603C	76
826-643C	8, 78
826-644C	8, 80
826-645C	8, 82
826-729C	8, 12, 94
826-730C	8, 12, 96
826-731C	8, 98
826-732C	8, 100
826-793C	8, 84
826-812C	12, 86
826-818C	8, 88
826-848C	102, 106
827-158C	40
837-066C	8, 12
837-076C	8
837-079C	8
838-094C	120
838-588C	120
838-615C	120
838-959C	120
840-273C	6, 10
841-284C	118
841-308C	118
842-243C	8, 12, 32
842-460C	22
848-077C	120
848-122C	120
848-128C	120
848-161C	120
848-305C	120
848-306C	120
848-307C	120
848-308C	120
848-843C	120
848-872C	120
851-167C	118
858-252C	120
858-381C	120
858-949C	120
861-074C	118
890-005C	42, 44
890-153C	40, 56
890-175C	58, 62, 66
890-182C	14
890-341C	58, 60, 62, 64, 66, 68
890-400C	58, 60, 64, 66, 68
890-401C	40, 56
890-671C	124
890-672C	66, 68
890-679C	124
890-680C	124
890-786C	34
890-806C	24
890-836C	20, 22
890-850C	20, 22
890-862C	18
890-970C	14, 36, 38, 40, 42, 44
891-177C	36, 38, 40, 42, 44
891-208C	34
891-236C	34, 66, 68
891-252C	130
891-485C	32
891-487C	32
891-522C	30, 126
891-523C	30, 126
891-524C	14
891-529C	30, 126
891-530C	30, 126
891-531C	30, 126
891-532C	30, 126
891-534C	30, 126
891-999C	38, 40, 44
90-24406	78
90-26654	84
91-25023	80

Part Number	Page
92-24406	78, 80
92-25075	82
93-24406	78
93-25023	80, 84
93-25075	82
94-26654	84
96-24406	78, 80
96-25075	82
96-26654	84
97-24406	78
97-25023	80
97-25075	82
97-26654	84
98-24406	78, 80
98-25075	82
98-26654	84
990-208R	34, 66, 68
99-24406	78, 80, 82, 84
A.305.500	102
A.305.501	106
A.709.500	90, 92, 94, 96, 98, 100, 102, 106
A.712.500	90, 92, 94, 96, 98, 100
DWG 18548	74
DWG 18549	76
DWG 21167	90
DWG 24726	92
DWG 25681	104
DWG 25682	108
DWG 26544	64
DWG 26557	26
DWG 26568	16
DWG 26569	18
DWG 26570	24
DWG 26959	102
DWG 26960	106
DWG 27840	28
DWG 27885	110
DWG 33229	112
DWG 33230	114
DWG 33987	94
DWG 33988	96
DWG 33989	98
DWG 35002	100
DWG 37510	88
DWG 37646	20
DWG 37650	32
DWG 37676	54
DWG 37911	80
DWG 37912	82
DWG 37916	78
DWG 37918	86
DWG 37967	8
DWG 37968	6
DWG 37969	12
DWG 37970	10
DWG 37983	4
DWG 39008	14
DWG 39037	30, 126
DWG 39097	130
DWG 39126	128
DWG 39131	42
DWG 39132	36
DWG 39133	56
DWG 39148	38
DWG 39149	44
DWG 39154	118
DWG 39156	120
DWG 39286	22
DWG 70421	40
DWG 70947	84
DWG 76332	46
DWG 76334	48
DWG 76335	50
DWG 76337	52
DWG 76585	122
DWG26541	70
DWG26542	72
DWG26543	62
DWG26545	58
DWG26547	60
DWG26548	66
DWG26549	68
DWG26943	124
DWG27888	116
DWG33297	34
J200UM-01-10.4	32
J-37-A	30, 126
J-37-R	30, 126
J-AC1-15-B	30, 126
N/A	102, 106, 110, 112, 114
U0.125.0532.00	90, 92, 94, 96, 98, 100
U0.125.1301.00	92
U0.125.1303.00	90, 94, 96, 98, 100
U0.125.2050.00	90, 92, 94, 96, 98, 100
U0.125.3003.00	90, 92, 94, 96, 98, 100
U0.125.5003.00	90, 92
U0.125.5053.00	94, 96
U0.125.5061.00	98, 100
U0.125.6003.00	90, 92
U0.125.6053.00	94, 96
U0.125.6061.00	98, 100
U0.125.7003.00	92
U0.125.7100.00	90, 92, 94, 96, 98, 100

Great Plains Manufacturing, Inc.
Corporate Office: P.O. Box 5060
Salina, Kansas 67402-5060 USA

www.landpride.com