Rotary Cutters

RCB(M)6615 (S/N 944729-)

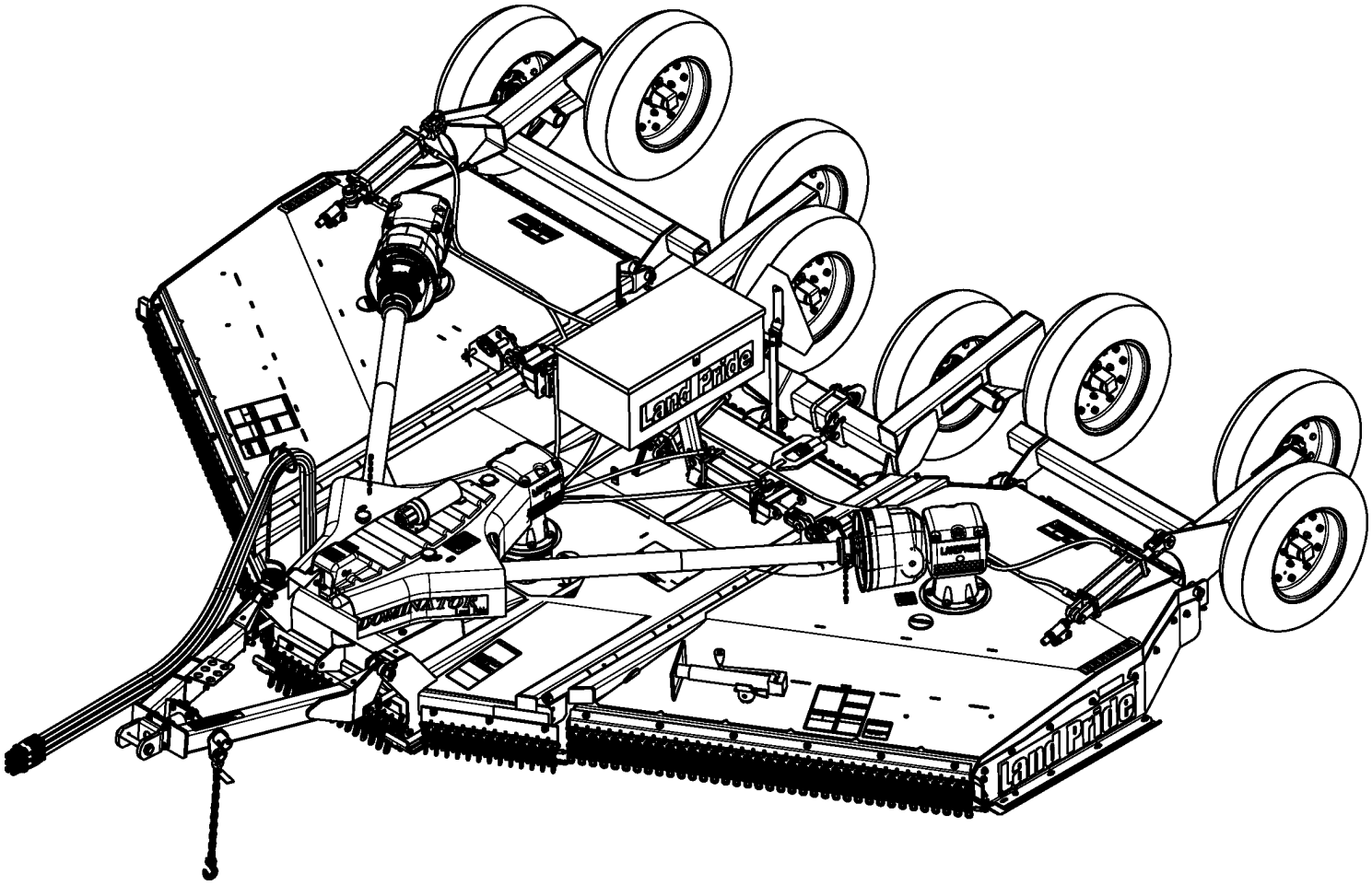

330-339P
Parts Manual

Land Pride

Read the Operator's Manual entirely. When you see this symbol, the subsequent instructions and warnings are serious - follow without exception. Your life and the lives of others depend on it!

© Copyright 2022 Printed 01/05/2023

Cover photo may show optional equipment not supplied with standard unit.

Table Of Contents

Section 1: Introduction **1**
- *Using This Manual* *1*
- *Manual Replacement Information* *1*
- *Manual Revisions* *1*
- *Touch-up Paint* *1*
- *Hardware Legend* *2*
- *Replacement Hardware* *2*
- *Serial Numbers* *2*
- *Part Number Service Coding* *2*

Section 2: Decks & Hitches **3**
- *Blade Carrier (6515 & 6615)* *3*
- *Deck Center Section* *5*
- *Deck Wing Section S/N 797271-* *9*
- *Deck Wing Section S/N 797272+* *13*
- *Hitch Ball Coupler* *17*
- *Hitch Bar Tite* *19*
- *Hitch LP Performance S/N 1000385-* *21*
- *Hitch Main Frame* *23*
- *Hitch Pintel* *25*
- *Hitch Standard Pivoting Clevis* *27*
- *Hitch Swivel* *29*
- *Leveling Rod (66 Series)* *31*
- *Toolbox* *33*

Section 3: Axles **35**
- *Axle Standard Center Deck S/N 774847-* *35*
- *Axle Standard Center Deck S/N 774848+* *37*
- *Axle Standard Wing Deck S/N 774847-* *39*
- *Axle Standard Wing Deck S/N 774848+* *41*
- *Axle Tandem Center Deck S/N 792271-* *43*
- *Axle Tandem Center Deck S/N 792272+* *45*
- *Axle Tandem Wing Deck S/N 792271-* *47*
- *Axle Tandem Wing Deck S/N 792272+* *49*

Section 4: Guards **51**
- *Guards Chain Double Row Front* *51*
- *Guards Chain Double Row Rear* *53*
- *Guards Chain Single Row Front* *55*
- *Guards Chain Single Row Rear* *57*
- *Guards Chain W/ Cable Front* *59*
- *Guards Chain W/ Cable Rear* *61*
- *Guards Rubber Front* *63*
- *Guards Rubber Rear* *65*

Section 5: Drivelines **67**
- *Driveline (826-112C) Walterscheid* *67*
- *Driveline (826-247C) Walterscheid* *69*
- *Driveline (826-643C) Weasler* *71*
- *Driveline (826-793C) Weasler* *73*
- *Driveline Center (826-478C) Comer* *75*
- *Driveline Center (826-818C) Comer* *77*
- *Driveline CV 1.38 1000 RPM (826-644C) Weasler* *79*
- *Driveline CV 1000 RPM (826-645C) Weasler* *81*
- *Driveline Slip Clutch (146.264.024.1) Comer* *83*
- *Driveline Slip Clutch (146.284.020.1) Comer* *85*
- *Driveline Slip Clutch (395980) Walterscheid* *87*
- *Driveline Wing (826-481C) Comer* *89*
- *Driveline Wing (826-481C) Walterscheid* *91*
- *Driveline Wing (826-812C) Comer* *93*
- *Driveline Wing (826-812C) Walterscheid* *95*

Section 6: Gearboxes **97**
- *Gearbox (826-320C) Comer* *97*
- *Gearbox (826-321C) Comer* *99*
- *Gearbox (826-322C) Comer* *101*
- *Gearbox (826-323C) Comer* *103*
- *Gearbox (826-324C) Comer* *105*
- *Gearbox (826-729C)* *107*
- *Gearbox (826-730C)* *109*
- *Gearbox (826-731C)* *111*
- *Gearbox Divider (826-520C) Comer* *113*
- *Gearbox Divider (826-521C) Comer* *115*
- *Gearbox Divider 1000 RPM (826-521C) Omni* *117*
- *Gearbox Divider 540 RPM (826-520C) Omni* *119*

Section 7: Hydraulics **121**
- *Hydraulic Cylinder (810-175C) Midway* *121*
- *Hydraulic Cylinder (810-176C) Midway* *123*
- *Hydraulic Cylinder (810-632C) Red Lion* *125*
- *Hydraulic Cylinder (810-671C) Red Lion* *127*
- *Hydraulic Cylinder (810-830C) Red Lion* *129*
- *Hydraulic Cylinder (810-831C) Red Lion* *131*
- *Hydraulic Cylinder Plumbing Components* *133*

Hydraulic Cylinders W/ Mounting Components *135*
Section 8: Decals **137**
Decal Placement *137*
Touch-up Paints - LP *139*
Section 9: Options & Accessories **141**
Manual Winch Wing Deck *141*
Tire Options *143*

General Information

Using This Manual

This manual is divided into sections. The first section contains General Information. The remaining sections divide the machine into segments (i.e. Frames, Drives, Hydraulics, etc.) which illustrate and list all parts. A Parts Number Index is located at the back of the book.

The Land Pride parts in this manual are specially designed for this machine and should be replaced with Land Pride parts only.

The information in this manual is current at time of printing. Some parts may change to assure top performance.

Right-hand and left-hand as used in this manual are determined by facing the direction the machine will travel while in use.

Below is an example of two facing pages from a parts manual. Familiarize yourself with the type of information contained on these pages.

Manual Replacement Information

Replacement manuals are available. Refer to our website at www.landpride.com or e-mail us at lit@landpride.com for additional information. Our website continues to provide the most up-to-date manuals available.

Touch-up Paint

Repaint parts where paint is worn or scratched to prevent rust. Aerosol cans and touch-up bottles with brush applicator are available through your local dealer. Also available are quart and gallon size paints. Add QT or GL to end of the Aerosol P/N.

Land Pride color descriptions and part numbers are listed on the "Land Pride Touch-Up Paints" page in the "Decals" section of this book.

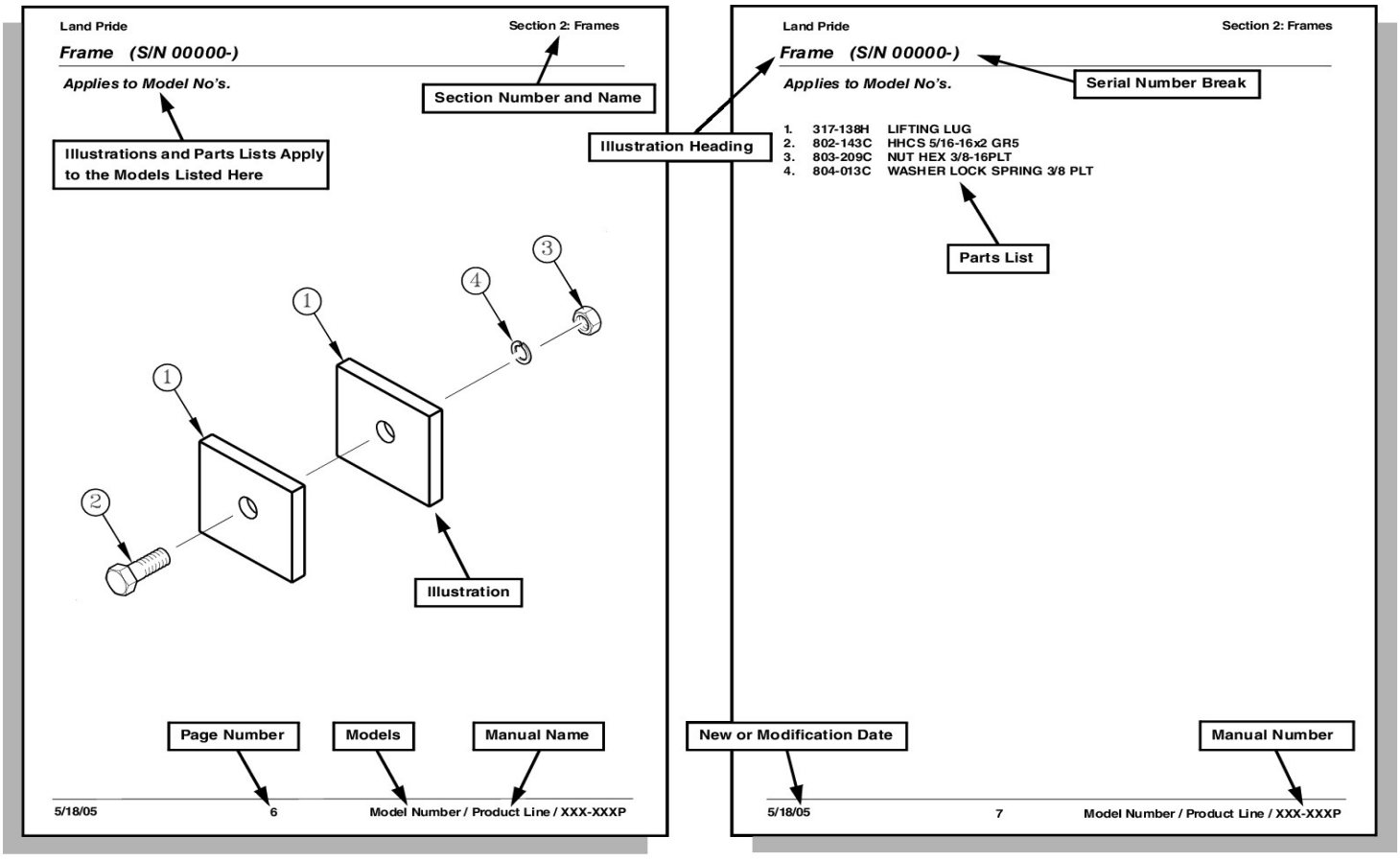

© Copyright 2022. All rights Reserved

Land Pride provides this publication "as is" without warranty of any kind, either expressed or implied. While every precaution has been taken in the preparation of this manual, Land Pride assumes no responsibility for errors or omissions. Neither is any liability assumed for damages resulting from the use of the information contained herein. Land Pride reserves the right to revise and improve its products as it sees fit. This publication describes the state of this product at the time of its publication, and may not reflect the product in the future. The illustrations in this manual are not intended for safe and proper assembly or disassembly of equipment. The illustrations are intended for ordering parts only.

Land Pride is a registered trademark.

All other brands and product names are trademarks or registered trademarks of their respective holders.

Printed in the United States of America.

Hardware Legend

AR	As Required
BLADE	Blade Bolt
C	Cap Screw
CP	Cotter Pin
CPHSSS	Cup Point Hex Socket Set Screw
CPSHSS	Cup Point Square Head Set Screw
CPSQHSS	Cup Point Square Head Set Screw
CRFCHMS3	Cross Recess Flat Countersunk Head Machine Screw
CRPHMS	Cross Recess Pan Head Machine Screw
CRPHTFS	Cross Recess Pan Head Thread Forming
CRRHMS	Cross Recess Round Head Machine Screw
CRTHMS	Cross Recess Truss Head Machine Screw
CSNB	Countersunk Square Neck Bolt
FHMS	Flat Head Machine Screw
FTC	Full Thread Cap Screw
H	Hex Nut
HCLN	Hex Center Lock Nut
HFLCS	Hex Flange Lock Cap Screw
HFS	Hex Flange Screw
HFSLN	Hex Flange Serrated Lock Nut
HFSS	Hex Flange Serrated Screw
HHCS	Hex Head Cap Screw or Metric Bolt
HSBHCS	Hex Socket Button Head Cap Screw
HSFCHCS	Hex Socket Flat Countersunk Head Cap Screw
HSHCS	Hex Socket Head Cap Screw
HSSS	Hex Socket Head Screw
HTLN	Hex Top Lock Nut
HWHCS	Hex Washer Head Cap Screw
HWHMS	Hex Washer Head Machine Screw
HXBHCS	Hex Socket Button Head Cap Screw
J	Hex Jam Nut
JIC	37 Degree Tapered Thread
L	Helical Spring Lock Washer
LUG	Lug Bolt
NFC	National Fine Cap Screw
NPSM	National Pipe Straight Mechanical
NPTF	National Pipe Taper Fuel
P	Wide Plain Washer
PHMS	Pan Head Machine Screw
PLOW	Plow Bolt
RHMS	Round Head Machine Screw
RHSNB	Round Head Square Neck Bolt
SCREW LEVELING	Leveling Screw
SCREW THUMB	Thumb Screw
SCREW WELD	Weld Screw
SFCHMS	Slotted Flat Countersunk Head Machine Screw
SFHMS	Slotted Fillister Head Machine Screw
SP	Special
SP SCREW	Special Screw
SQHSS	Square Head Set Screw
SRHMS	Slotted Round Head Machine Screw
SSS	Socket Set Screw
STCS	Self Tapping Cap Screw
STHMS	Slotted Truss Head Machine Screw
WHEEL	Wheel Studs and Hub Long Bolts
WING	Wing Bolt

Replacement Hardware

The **Hardware Legend** above lists hardware abbreviations used in the parts list. All bolts and nuts are Grade 5 unless otherwise noted. The use of improper grades of hardware can result in personal injury, damage to equipment, or loss of property.

Colored Replacement Parts

Land Pride offers replacement parts in factory standard colors and also on select models in Green, Orange, Red and Blue. Because of the variety of colors available, special attention must be given to the part number to prevent ordering the wrong replacement part.

A suffix number corresponding to one of the colors below must be added at the end of Land Pride's part number when ordering a replacement part with that color.

81 . . . . . Green **83 . . . . .Red**
82 . . . . . Orange **84 . . . . .Blue**

For example, if you are ordering a replacement part with part number 555-555C and the part you need is red, then add the suffix 83 to the end of the number to make the part number read 555-555C83. Parts ordered without a suffix number will be supplied in factory standard colors.

Black Replacement Parts

Some parts are factory standard black and some must be special ordered black. If your part is special ordered black, a second part number with the additional suffix number 85 on the end will be available. In this situation you must order that part with the suffix number for it to be black. Parts that are factory standard black will not have the suffix number.

Part Number Service Coding

Within the parts list some part numbers are coded for revisions and interchangeability. See notations in revision column.

Serial Numbers

Always use the serial and model number when ordering parts. Refer to the Operator's Manual for serial number plate location.

(S/N 20001+)	Includes serial numbers 20001 and above (to the latest number)
(S/N 10001 to 20000)	Includes serial numbers between and including 10001 and 20000
(S/N 10000-)	Includes serial numbers 10000 and below (to the earliest number)

Blade Carrier (6515 & 6615)

Applies to Models: RCBM6615 S/N 944729-, RCB6615 S/N 944729-

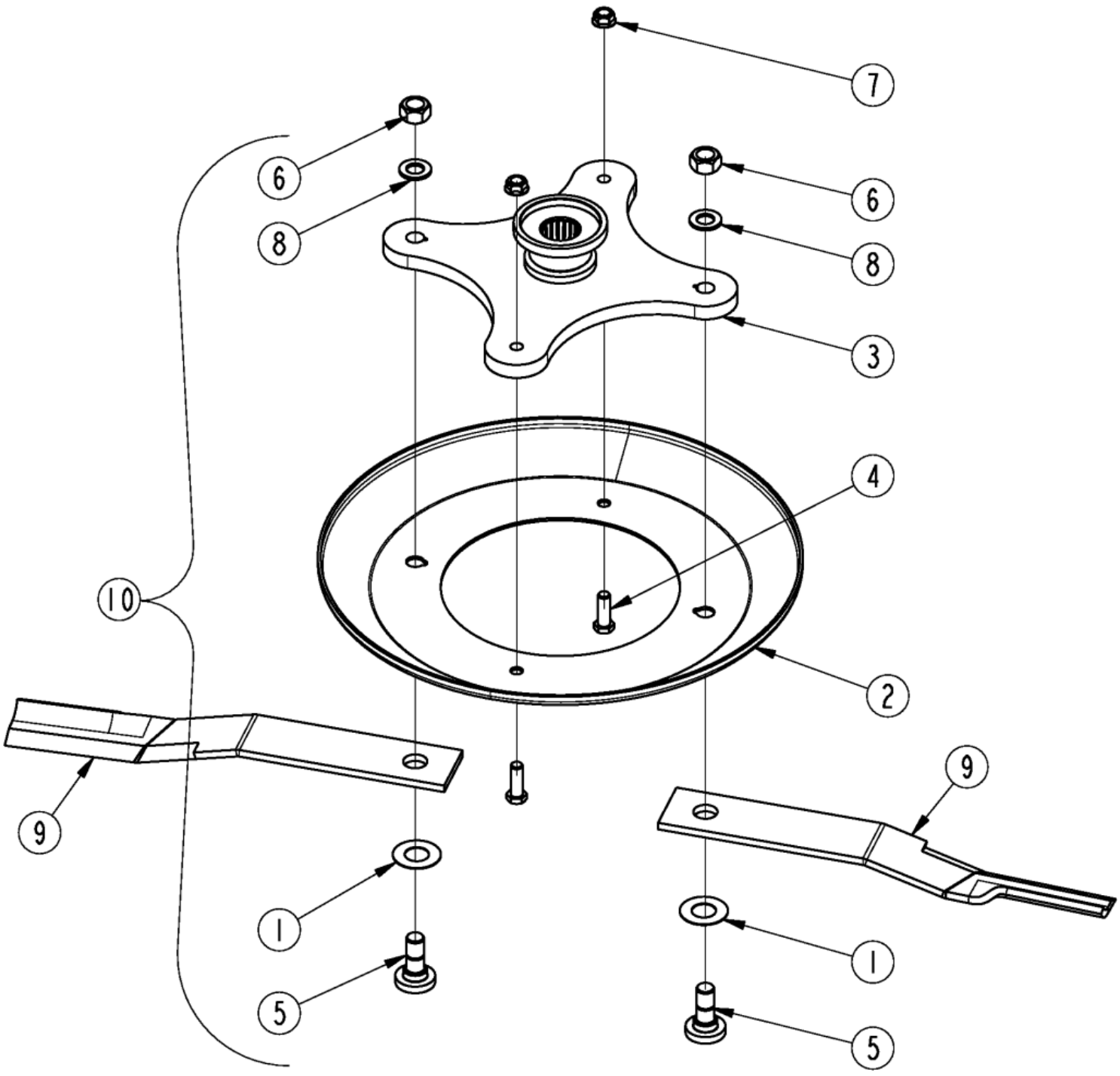

Blade Carrier (6515 & 6615)

Applies to Models: RCBM6615 S/N 944729-, RCB6615 S/N 944729-

Ref.	Part No.	Part Description	Comments
	DWG 24722	Drawing Image Number	
1	312-075D	BLADE SPACER 16 GA	As Required S/N 776426-
1	312-082D	RPBY 312-808D QTY 2	As Required S/N 776426-
1	312-089D	BLADE SPACER 20 GA.	As Required S/N 776426-
1	312-808D	BLADE SPACER 24GA	As Required S/N 776426-
2	318-190D	LARGE ROUND DISHPAN 3/16	
3	318-766H	BLD PLT DSHPN WMT 19C/C	
4	802-065C	HHCS 3/4-10X2 1/4 GR5	
5	802-277C	BLD BLT 1 1/8-12X3.44 W/.25KEY	
6	803-170C	NUT HEX TOP LOCK 1 1/8-12 PLT	
7	803-181C	NUT HEX FLANGE LOCK 3/4-10 PLT	
8	804-147C	WASHER FLAT 1" HARDENED	
9	820-168C	CUTTER BLADE 1/2X4X29 CCW	Center section (Standard)
9	820-478C	CUTTER BLADE 1/2X4X29 CCW LL	Center section (Low lift) --- Good for tall weeds and brush
9	820-725C	CUTTER BLADE 1/2X4X29 CCW HL	Center section (High lift) --- Good for grass cutting. Not intended for high exposure to brush and tree cutting, contact with ground or animal mounds and standing water.
9	820-169C	CUTTER BLADE 1/2X4X23 CCW	Right wing section (Standard)
9	820-479C	CUTTER BLADE 1/2X4X23 CCW LL	Right wing section (Low lift) --- Good for tall weeds and brush
9	820-724C	CUTTER BLADE 1/2X4X23 CCW HL	Right wing section (High lift) --- Good for grass cutting. Not intended for high exposure to brush and tree cutting, contact with ground or animal mounds and standing water.
9	820-170C	CUTTER BLADE 1/2X4X23 CW	Left wing section (Standard)
9	820-480C	CUTTER BLADE 1/2X4X23 CW LL	Left wing section (Low lift) --- Good for tall weeds and brush
9	820-726C	CUTTER BLADE 1/2X4X23 CW HL	Left wing section (High lift) --- Good for grass cutting. Not intended for high exposure to brush and tree cutting, contact with ground or animal mounds and standing water.
10	318-586A	BLADE BOLT KIT	With Manual (Item 1 not included)

Deck Center Section

Applies to Models: RCBM6615 S/N 944729-, RCB6615 S/N 944729-

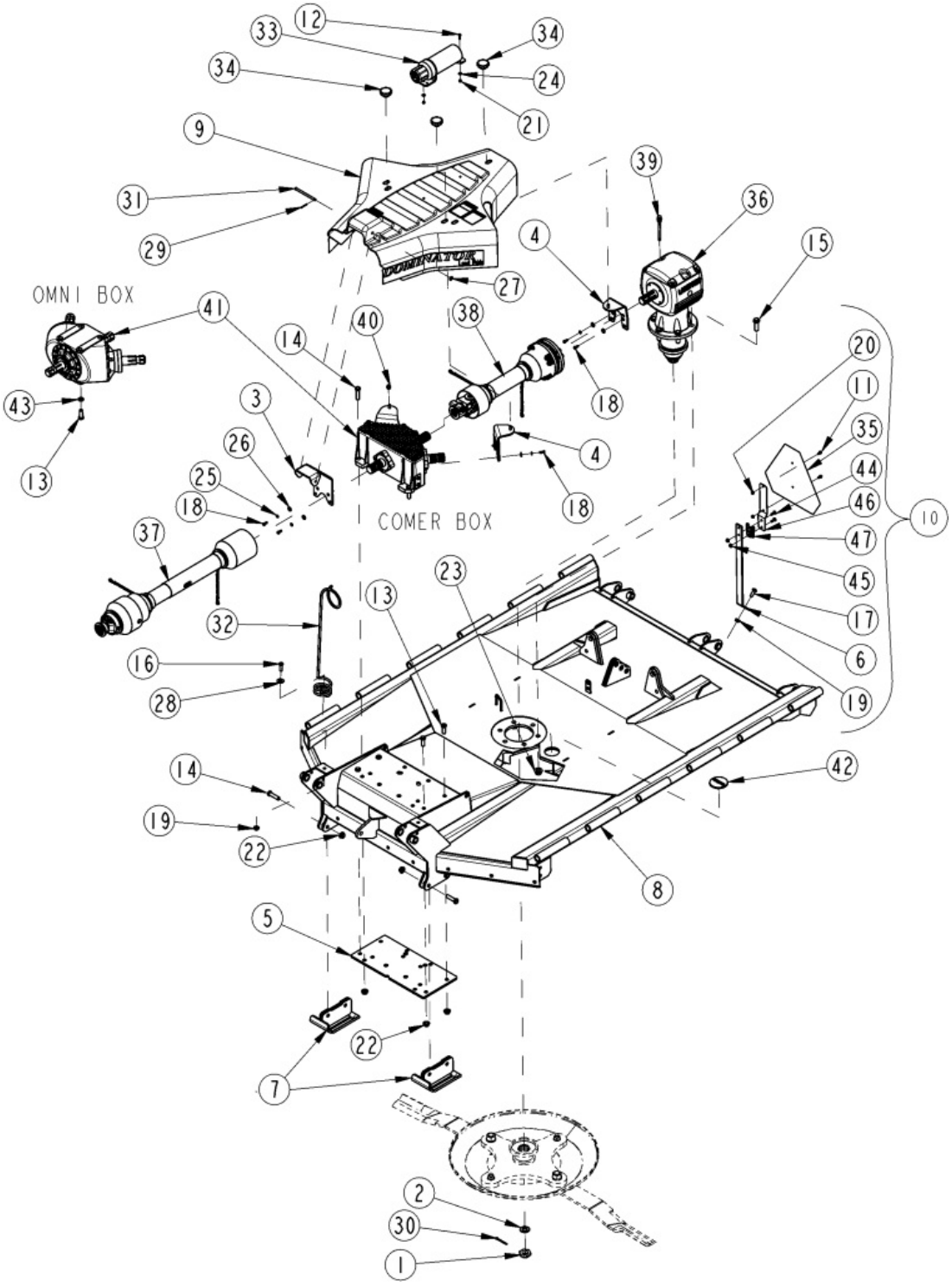

Deck Center Section

Applies to Models: RCBM6615 S/N 944729-, RCB6615 S/N 944729-

Ref.	Part No.	Part Description	Comments
	DWG 27839	Drawing Image Number	
1	318-322D	FORMED HINGE BRACKET	
2	318-401H	SHIELD BRACKET WELDMENT	
3	318-746D	PLATE, DIV. BOX SUPPORT	
4	330-001D	SMV BRACKET	
5	330-185H	SKID SHOE	
6	330-186H	DECK, SMOOTH CENTER WO/DR	Without Deck Rings
6	330-186H81	DECK, CENTER WO/DR GREEN	Without Deck Rings
6	330-186H82	DECK, CENTER WO/DR ORANGE	Without Deck Rings
6	330-186H83	DECK, CENTER WO/DR RED	Without Deck Rings
6	330-189H	DECK, SMOOTH CENTER W/DR	With Deck Rings
6	330-189H81	DECK, CENTER W/DR GREEN	With Deck Rings
6	330-189H82	DECK, CENTER W/DR ORANGE	With Deck Rings
6	330-189H83	DECK, CENTER W/DR RED	With Deck Rings
7	330-286K	DIV BOX COVER DOMINATOR	Beige & Green
7	330-286K82	ORANGE DOMINATOR COVER	
7	330-286K83	RED DOMINATOR COVER	
8	330-291S	SLOW MOVING VEHICLE ASY	
9	802-005C	HHCS 1/4-20X1 GR5	
10	802-053C	HHCS 5/8-11X1 3/4 GR5 FTHD	
11	802-058C	HHCS 5/8-11X2 1/2 GR5	
12	802-065C	HHCS 3/4-10X2 1/4 GR5	
13	802-091C	HHCS 1/2-13X1 1/2 GR5	
14	802-106C	RHSNB 1/2-13X1 1/2 GR5	
15	802-196C	HFS 1/4-20X5/8 GR5	
16	802-282C	RHSNB 5/16-18X1 GR5	
17	802-314C	HHCS M8X1.25X20 GR8.8	
18	803-037C	NUT HEX WHIZ 1/2-13 PLT GR5	
19	803-043C	NUT HEX WHIZ 5/16-18 PLT	
20	803-230C	NUT HEX FLANGE 1/4-20 PLT	
21	803-255C	NUT HEX NYLOCK 1/4-20	
22	803-263C	NUT HEX FLANGE LOCK 5/8-11 PLT	
23	803-299C	NUT HEX FLG TOP LK 3/4-10 PLT	
24	804-007C	WASHER FLAT 1/4 SAE PLT	
25	804-009C	WASHER LOCK SPRING 5/16 PLT	
26	804-010C	WASHER FLAT 5/16 USS PLT	
27	804-012C	WASHER FLAT 3/8 SAE PLT	
28	804-017C	WASHER FLAT 1/2 USS PLT	
29	804-022C	WASHER LOCK SPRING 5/8 PLT	
30	805-045C	PIN COTTER 5/32 X 1 1/4 LG	
31	805-309C	PIN CLVS .38X5.26 USBL	
32	807-073C	SPRING HOSE LOOP HEAVY	
33	816-481C	MANUAL STORAGE CONTAINER	
34	817-259C	KNOB 3/8-16 FEMALE THD 2 3/8OD	
35	818-055C	DECAL SLOW MOVING-GALV. BACKED	
36	826-643C	DRVLN C6 42 1.38-6 CV	RCB6615
36	826-112C	DRVLN C5 40 1.38-6 QD	RCB6615
36	826-644C	DRVLN C6 42 1.38-21 CV	RCBM6615
36	826-247C	DRVLN C5 44 1.38-21 QD	RCBM6615
36	826-645C	DRVLN C6 47 1.75-20 CV	RCBM6615

Deck Center Section

This Page Intentionally Left Blank

Deck Center Section

Ref.	Part No.	Part Description	Comments
36	826-793C	DRVLN C6 39 1.38-21 CV ORCLTCH	RCBM6615
37	826-818C	DRVLN C5 11 1.75-20 FX CLTCH	S/N 928454+
37	826-478C	RPBY 826-818C	S/N 928453- 540 RPM & 1000 RPM CAT 5
38	826-486C	COMER U0.125.7003.00 DIPSTICK	
39	826-497C	COMER VENT #8.6.7.00269	
40	826-520C	DIV BOX 540RPM 1 3/4-20	RCB6615
40	826-521C	DIV BOX 1000RPM 1 3/4-20	RCBM6615
41	826-729C	GBOX RC60 1:1.60 STD	RCB6615 S/N 743621+
41	826-320C	RPBY 826-939C	RCB6615 S/N 743620-
41	826-731C	GBOX RC60 1.15:1 STD	(Obsolete) RCB6615 S/N 743621+
41	826-323C	GBOX RCM60 1.21:1 STD	RCB6615 S/N 743620-
42	840-273C	PLUG LP 3" ID RUBBER	
43	890-153C	SMV MOUNTING BLADE	
44	890-401C	SMV MOUNTING SOCKET	

Deck Wing Section S/N 797271-

Applies to Models: RCBM6615 S/N 944729-, RCB6615 S/N 944729-

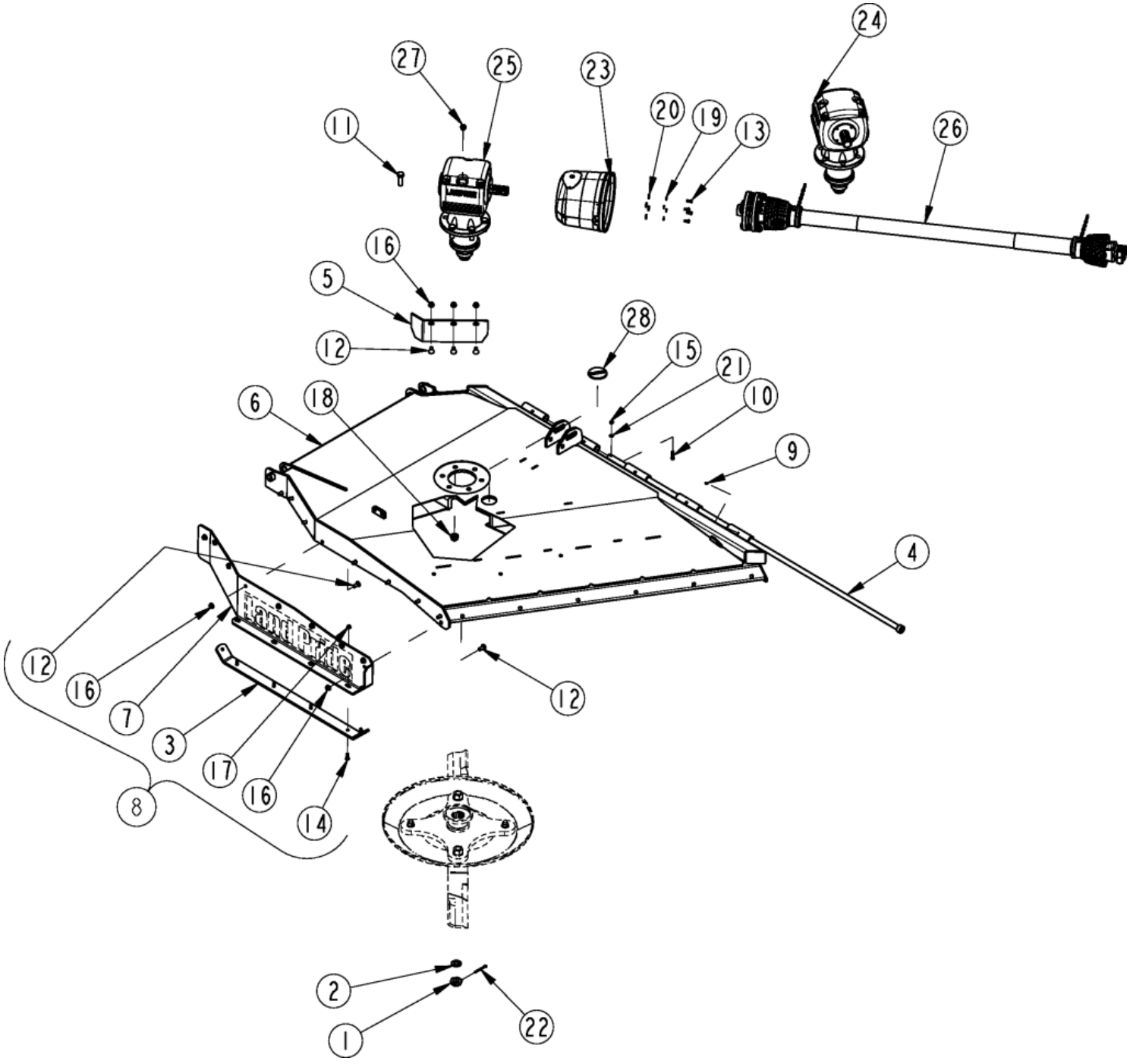

Deck Wing Section S/N 797271-

Applies to Models: RCBM6615 S/N 944729-, RCB6615 S/N 944729-

Ref.	Part No.	Part Description	Comments
	DWG 27837	Drawing Image Number	
1		CO NUT, CASTLE M30 X 2	
2		CO BLANK WASHER	
3	318-633D	SKID SHOE	
4	318-696H	WLDMT. HINGE ROD	
4	318-696H81	WLDMT. HINGE ROD GREEN	
4	318-696H82	WELMT, HINGE ROD ORANGE	
4	318-696H83	WLDMT. HINGE ROD RED	
5	318-927D	DEFLECTOR RH	
5	318-928D	DEFLECTOR LH	
6	330-187H	DECK, RH WING WO/DR	No Deck Rings
6	330-187H81	DECK RH WING WO/DR GREEN	No Deck Rings
6	330-187H82	DECK RH WING WO/DR ORANGE	No Deck Rings
6	330-187H83	DECK RH WING WO/DR RED	No Deck Rings
6	330-188H	DECK, LH WING WO/DR	No Deck Rings
6	330-188H81	DECK LH WING WO/DR GREEN	No Deck Rings
6	330-188H82	DECK LH WING WO/DR ORANGE	No Deck Rings
6	330-188H83	DECK LH WING WO/DR RED	No Deck Rings
6	330-190H	DECK, RH WING W/DR	With Deck Rings
6	330-190H81	DECK, RH WING W/DR GREEN	With Deck Rings
6	330-190H82	DECK, RH WING W/DR ORANGE	With Deck Rings
6	330-190H83	DECK, RH WING W/DR RED	With Deck Rings
6	330-191H	DECK, LH WING W/DR	With Deck Rings
6	330-191H81	DECK, LH WING W/DR GREEN	With Deck Rings
6	330-191H82	DECK, LH WING W/DR ORANGE	With Deck Rings
6	330-191H83	DECK, LH WING W/DR RED	With Deck Rings
7		PANEL, SIDE SKIRT RH	
7		PANEL, SIDE SKIRT LH	
8	330-219S	ASSY, SIDE SKIRT RH	
8	330-219S81	ASSY, SIDE SKIRT RH GREEN	
8	330-219S82	ASSY, SIDE SKIRT RH ORANGE	
8	330-219S83	ASSY, SIDE SKIRT RH RED	
8	330-220S	ASSY, SIDE SKIRT LH	
8	330-220S81	ASSY, SIDE SKIRT LH GREEN	
8	330-220S82	ASSY, SIDE SKIRT LH ORANGE	
8	330-220S83	ASSY, SIDE SKIRT LH RED	
9	800-001C	GREASE ZERK STRAIGHT 1/4-28	S/N 848050+
9	800-080C	GREASE ZERK 1/4-28 THD FORMING	S/N 848049-
10	802-022C	HHCS 3/8-16X1 1/2 GR5	
11	802-065C	HHCS 3/4-10X2 1/4 GR5	
12	802-214C	RHSNB 1/2-13X1 1/4 GR5	
13	802-314C	HHCS M8X1.25X20 GR8.8	
14	802-466C	PLOW 3/8-16X1 1/4 GR5	
15	803-014C	NUT HEX 3/8-16 PLT	
16	803-037C	NUT HEX WHIZ 1/2-13 PLT GR5	
17	803-198C	NUT HEX WHIZ 3/8-16 PLT	
18	803-299C	NUT HEX FLG TOP LK 3/4-10 PLT	
19	804-009C	WASHER LOCK SPRING 5/16 PLT	
20	804-010C	WASHER FLAT 5/16 USS PLT	
21	804-013C	WASHER LOCK SPRING 3/8 PLT	

Deck Wing Section S/N 797271-

This Page Intentionally Left Blank

Deck Wing Section S/N 797271-

Ref.	Part No.	Part Description	Comments
22		PIN COTTER	
23	826-648C	LARGE SHAFT CONE W ACCESS DOOR	
24	826-729C	GBOX RC60 1:1.60 STD	RCB6615 LH S/N 743621+
24	826-320C	RPBY 826-939C	RCB6615 LH S/N 743620-
24	826-322C	GBOX RCM60 1:1.21 STD	RCBM6615 LH
25	826-730C	GBOX RC60 1:1.60 REV	RCB6615 RH S/N 743621+
25	826-321C	GBOX RC60 1:1.46 REV	(Obsolete) RCB6615 RH S/N 743620-
25	826-324C	RPBY 826-944C	RCBM6615 RH
26	826-812C	DRVLN C5 48 1.75-20 FX CLTCH	
26	826-481C	RPBY 826-812C	(Obsolete) RCB6615 & RCBM6615 Cat 5
27	826-486C	COMER U0.125.7003.00 DIPSTICK	
28	840-273C	PLUG LP 3" ID RUBBER	

Deck Wing Section S/N 797272+

Applies to Models: RCBM6615 S/N 944729-, RCB6615 S/N 944729-

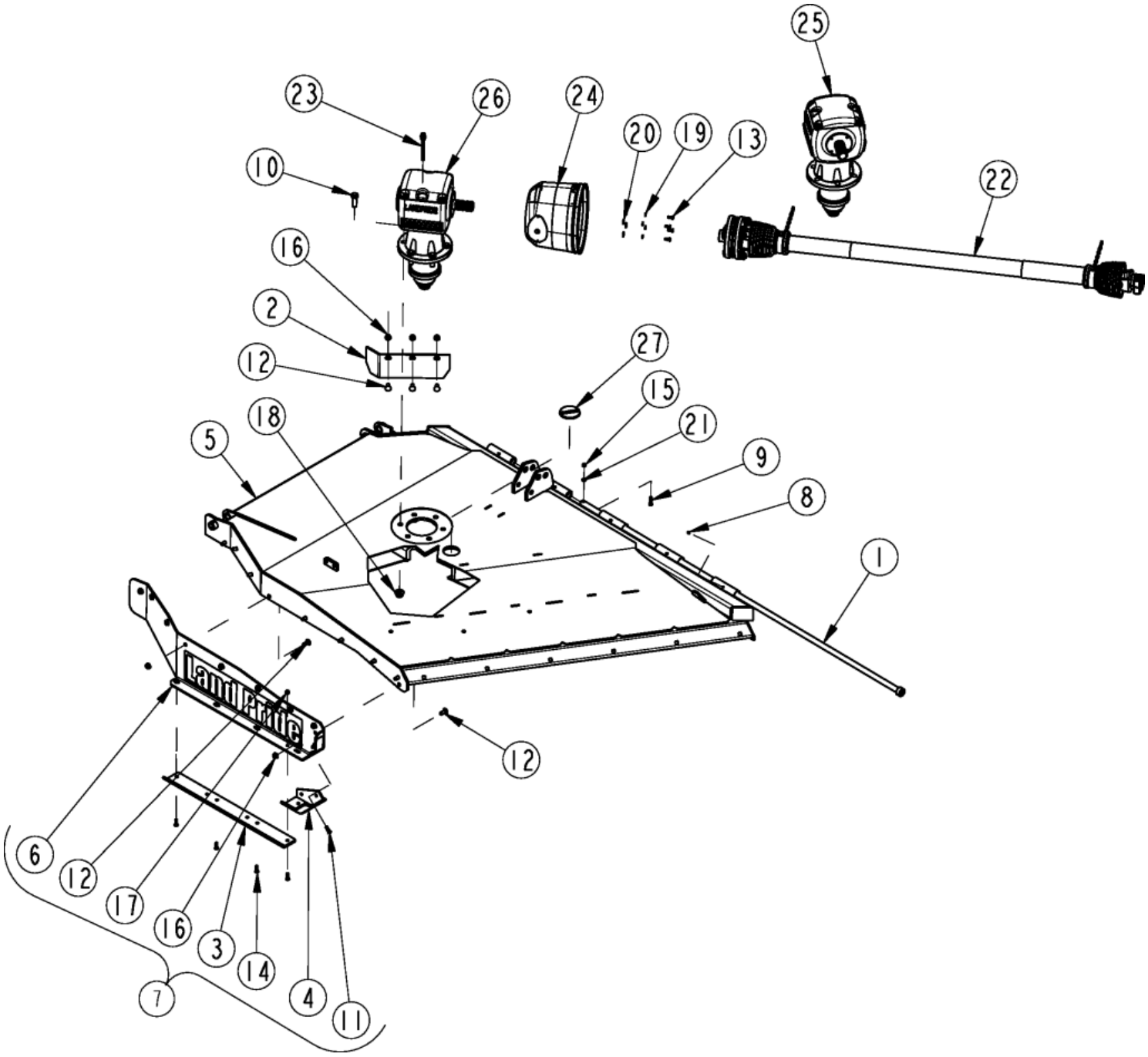

Deck Wing Section S/N 797272+

Applies to Models: RCBM6615 S/N 944729-, RCB6615 S/N 944729-

Ref.	Part No.	Part Description	Comments
	DWG 35531	Drawing Image Number	
1	318-696H	WLDMT. HINGE ROD	
1	318-696H81	WLDMT. HINGE ROD GREEN	
1	318-696H82	WELMT, HINGE ROD ORANGE	
1	318-696H83	WLDMT. HINGE ROD RED	
2	318-927D	DEFLECTOR RH	
3	330-835D	WING SKID SHOE	
4	331-120H	HARDENED WING SKID SHOE	
5	331-204H	DECK, RCB RH WING WO/DR	No Deck Rings
5	331-204H81	DECK, RCB RH WING WO/DR GREEN	No Deck Rings
5	331-204H82	DECK, RCB RH WING WO/DR ORANGE	No Deck Rings
5	331-204H83	DECK, RCB RH WING WO/DR RED	No Deck Rings
5	331-206H	DECK, RCB LH WING WO/DR	No Deck Rings
5	331-206H81	DECK, RCB LH WING WO/DR GREEN	No Deck Rings
5	331-206H82	DECK, RCB LH WING WO/DR ORANGE	No Deck Rings
5	331-206H83	DECK, RCB LH WING WO/DR RED	No Deck Rings
5	331-203H	DECK, RCB RH WING W/DR	With Deck Rings
5	331-203H81	DECK, RCB RH WING W/DR GREEN	With Deck Rings
5	331-203H82	DECK, RCB RH WING W/DR ORANGE	With Deck Rings
5	331-203H83	DECK, RCB RH WING W/DR RED	With Deck Rings
5	331-205H	DECK, RCB LH WING W/DR	With Deck Rings
5	331-205H81	DECK, RCB LH WING W/DR GREEN	With Deck Rings
5	331-205H82	DECK, RCB LH WING W/DR ORANGE	With Deck Rings
5	331-205H83	DECK, RCB LH WING W/DR RED	With Deck Rings
6		PANEL, SLOPED SIDE SKIRT RH	
6		PANEL, SLOPED SIDE SKIRT LH	
7	331-209S	ASSY, SLOPED SIDE SKIRT RH	
7	334-252K81	LP RH SIDE SKIRT ASY, GREEN	
7	331-209S81	RPBY 334-252K81	Obsolete
7	334-252K82	LP RH SIDE SKIRT ASY, ORANGE	
7	331-209S82	RPBY 334-252K82	Obsolete
7	334-252K83	LP RH SIDE SKIRT ASY, RED	
7	331-209S83	RPBY 334-252K83	Obsolete
7	331-210S	ASSY, SLOPED SIDE SKIRT LH	
7	334-253K81	LP LH SIDE SKIRT ASY, GREEN	
7	331-210S81	RPBY 334-253K81	Obsolete
7	334-253K82	LP LH SIDE SKIRT ASY, ORANGE	
7	331-210S82	RPBY 334-253K82	Obsolete
7	334-253K83	LP LH SIDE SKIRT ASY, RED	
7	331-210S83	RPBY 334-253K83	Obsolete
8	800-001C	GREASE ZERK STRAIGHT 1/4-28	S/N 848050+
8	800-080C	GREASE ZERK 1/4-28 THD FORMING	S/N 848049-
9	802-022C	HHCS 3/8-16X1 1/2 GR5	
10	802-065C	HHCS 3/4-10X2 1/4 GR5	
11	802-155C	RHSNB 3/8-16X1 1/4 GR5	
12	802-214C	RHSNB 1/2-13X1 1/4 GR5	
13	802-314C	HHCS M8X1.25X20 GR8.8	
14	802-466C	PLOW 3/8-16X1 1/4 GR5	
15	803-014C	NUT HEX 3/8-16 PLT	
16	803-037C	NUT HEX WHIZ 1/2-13 PLT GR5	

Deck Wing Section S/N 797272+

This Page Intentionally Left Blank

Deck Wing Section S/N 797272+

Ref.	Part No.	Part Description	Comments
17	803-198C	NUT HEX WHIZ 3/8-16 PLT	
18	803-299C	NUT HEX FLG TOP LK 3/4-10 PLT	
19	804-009C	WASHER LOCK SPRING 5/16 PLT	
20	804-010C	WASHER FLAT 5/16 USS PLT	
21	804-013C	WASHER LOCK SPRING 3/8 PLT	
22	826-812C	DRVLN C5 48 1.75-20 FX CLTCH	RCB6615, RCBM6615 S/N 908164+
22	826-481C	RPBY 826-812C	(Obsolete) RCB6615, RCBM6615 S/N 908163-
23	826-486C	COMER U0.125.7003.00 DIPSTICK	
24	826-648C	LARGE SHAFT CONE W ACCESS DOOR	
25	826-729C	GBOX RC60 1:1.60 STD	RCB6615 LH
25	826-322C	GBOX RCM60 1:1.21 STD	RCBM6615 LH
26	826-730C	GBOX RC60 1:1.60 REV	RCB6615 RH
26	826-324C	RPBY 826-944C	RCBM6615 LH
27	840-273C	PLUG LP 3" ID RUBBER	

Hitch Ball Coupler

Applies to Models: RCBM6615 S/N 944729-, RCB6615 S/N 944729-

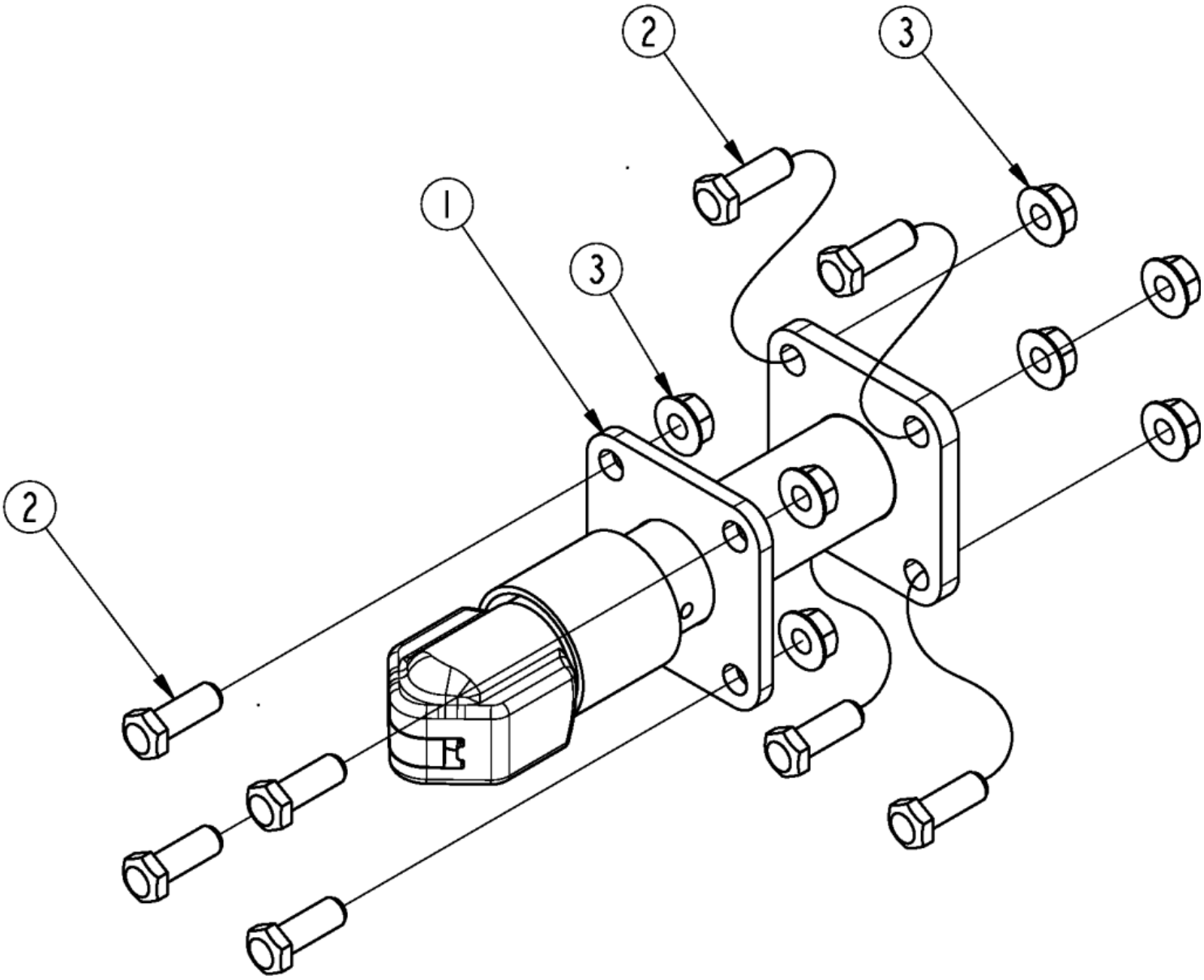

Hitch Ball Coupler

Applies to Models: RCBM6615 S/N 944729-, RCB6615 S/N 944729-

Ref.	Part No.	Part Description	Comments
	DWG 26568	Image No.	
	330-335A	BALL HITCH	
		*	
1	330-348H	BALL HITCH	
2	802-053C	HHCS 5/8-11X1 3/4 GR5 FTHD	S/N 615584+
2	802-082C	HHCS 1/2-13X1 3/4 GR5 FTHD	S/N 615583-
3	803-304C	NUT HEX WHIZ 5/8-11 PLT	S/N 615584+
3	803-037C	NUT HEX WHIZ 1/2-13 PLT GR5	S/N 615583-

Hitch Bar Tite

Applies to Models: RCBM6615 S/N 944729-, RCB6615 S/N 944729-

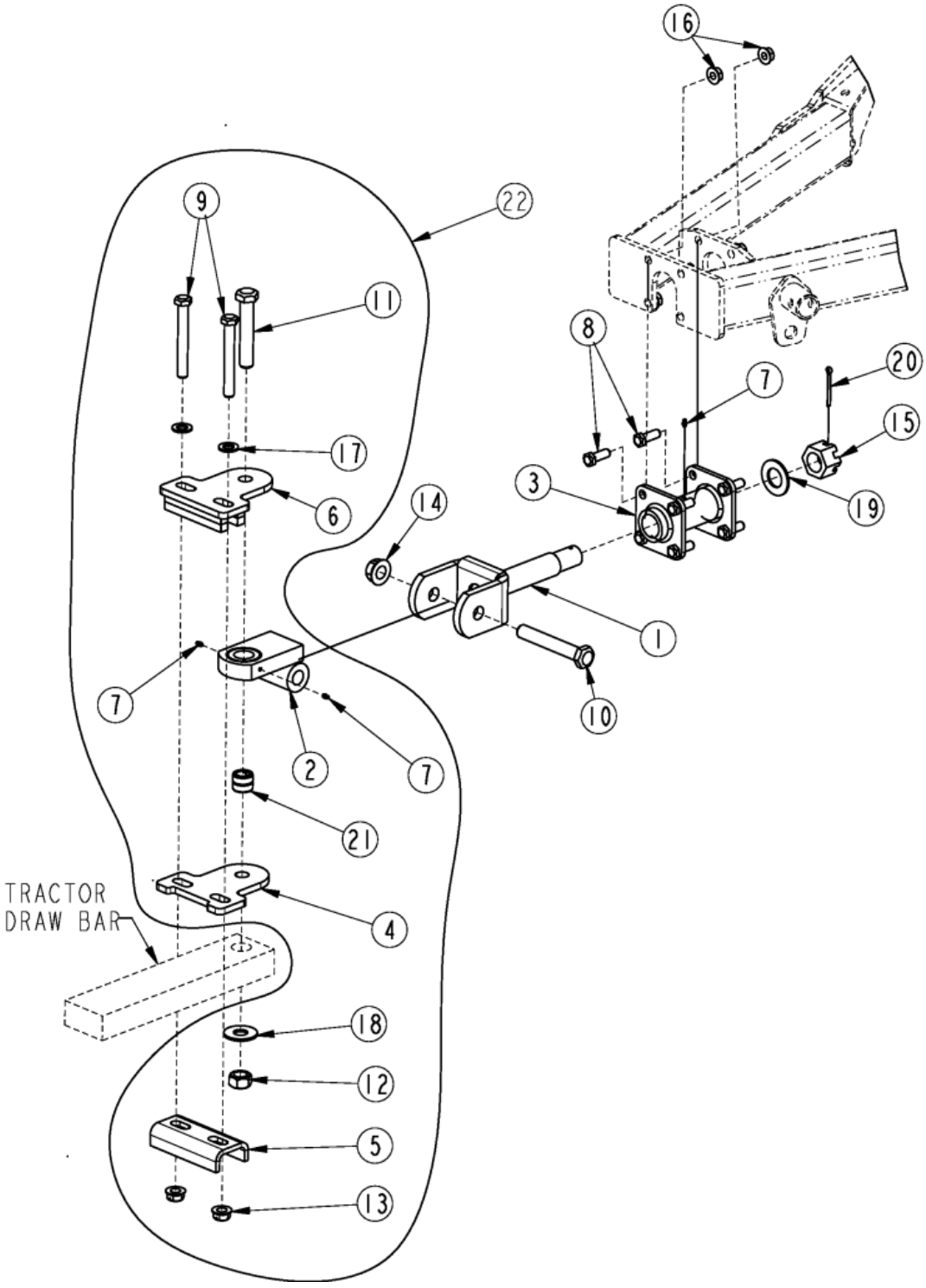

Hitch Bar Tite

Applies to Models: RCBM6615 S/N 944729-, RCB6615 S/N 944729-

Ref.	Part No.	Part Description	Comments
	DWG 26569	Drawing Image Number	
	330-333A	BAR TITE HITCH	
		*	
1	318-358H	SHAFT WELDMENT	
2	318-834H	WELDMENT HITCH CLEVIS	
3	330-271H	SWIVEL RECEIVER	
4	330-563D	HITCH WEAR PLATE WIDE	
5	330-564D	FORMED HITCH SUPPORT WIDE	
6	330-975H	BAR TITE WIDE TOP	
7	800-001C	GREASE ZERK STRAIGHT 1/4-28	
8	802-053C	HHCS 5/8-11X1 3/4 GR5 FTHD	S/N 615584+
8	802-082C	HHCS 1/2-13X1 3/4 GR5 FTHD	S/N 615583-
9	802-070C	HHCS 3/4-10X6 GR5	S/N _____+
9	802-594C	HHCS 3/4-10X5 1/2 GR5	S/N _____-
10	802-074C	HHCS 1-8X6 1/2 GR5	
11	802-205C	HHCS 1-8X5 1/2 GR5	S/N _____+
11	802-235C	HHCS 1-8X5 GR5	S/N _____-
12	803-168C	NUT HEX TOP LOCK 1-8 PLT	
13	803-181C	NUT HEX FLANGE LOCK 3/4-10 PLT	
14	803-258C	NUT HEX FLG LOCK 1-8 GR B PLT	
15	803-301C	NUT HEX SLOTTED 1 1/2-6 PLT	
16	803-304C	NUT HEX WHIZ 5/8-11 PLT	S/N 615584+
16	803-037C	NUT HEX WHIZ 1/2-13 PLT GR5	S/N 615583-
17	804-025C	WASHER FLAT 3/4 SAE PLT	
18	804-028C	WASHER FLAT 1 USS PLT	
19	804-171C	WASHER FLAT 1.50 HARD ASTMF436	
20	805-105C	PIN COTTER 1/4 X 2 1/2 PLT	
21	890-862C	BUSHING 1.50ODX1.00IDX1.25	
22	330-974K	BAR TITE HITCH WIDE	

Hitch LP Performance S/N 1000385-

Applies to Models: RCBM6615 S/N 944729-, RCB6615 S/N 944729-

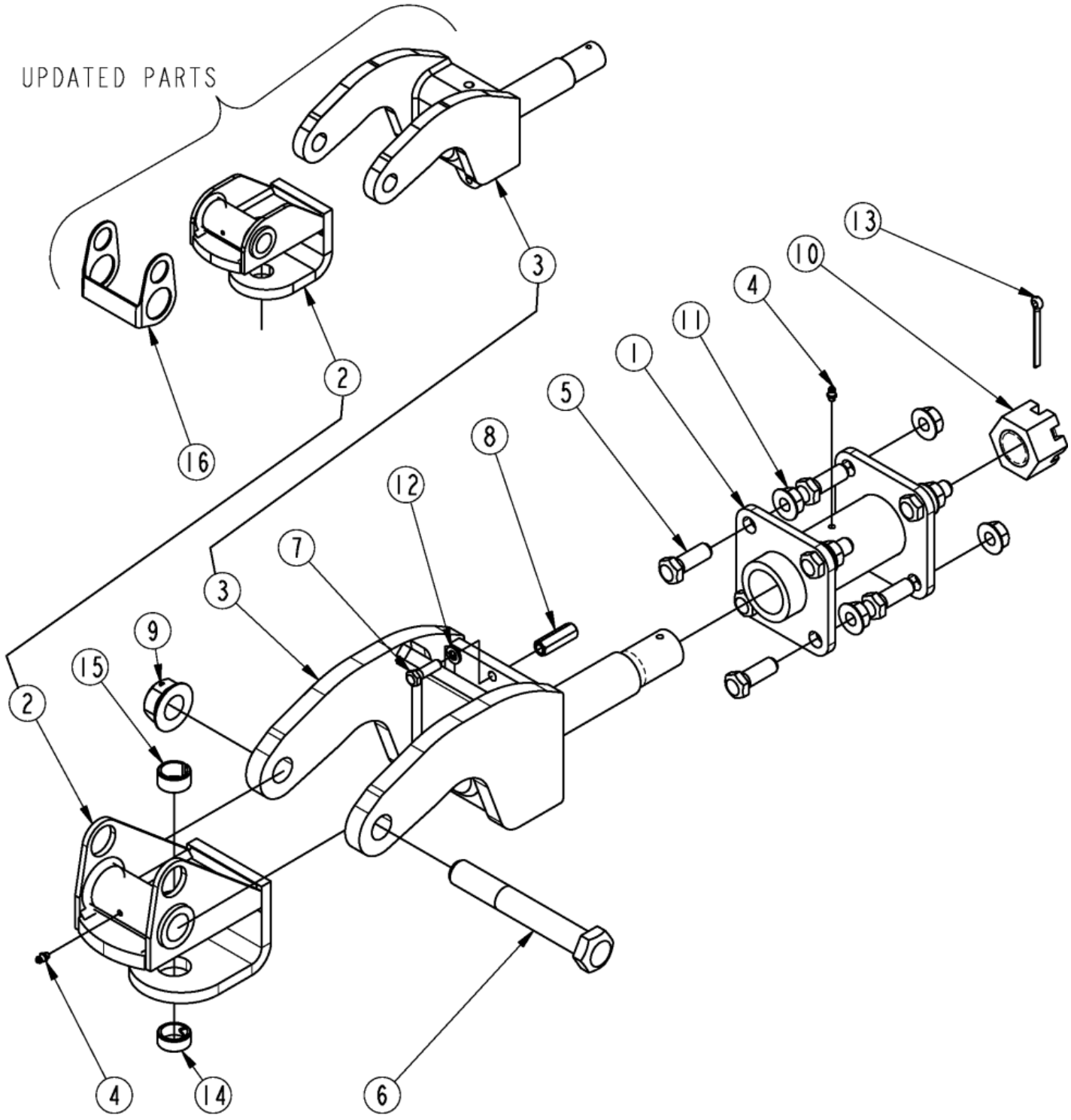

Hitch LP Performance S/N 1000385-

Applies to Models: RCBM6615 S/N 944729-, RCB6615 S/N 944729-

Ref.	Part No.	Part Description	Comments
	DWG 37646	Image No.	
	334-045A	LP PERFORMANCE HITCH	
1	330-271H	SWIVEL RECEIVER	
2	334-046H	HITCH CLEVIS	If you order this part you will receive the updated version. You will also need to order item 16 to go with the updated item 2
3	334-048H	HITCH YOKE	If you order this part you will receive the updated version
4	800-001C	GREASE ZERK STRAIGHT 1/4-28	
5	802-053C	HHCS 5/8-11X1 3/4 GR5 FTHD	
6	802-075C	HHCS 1-8X7 GR5	
7	802-079C	HHCS 3/8-16X1 1/4 GR5	
8	803-201C	NUT HEX COUPLER 3/8-16X1 3/4	
9	803-258C	NUT HEX FLG LOCK 1-8 GR B PLT	
10	803-301C	NUT HEX SLOTTED 1 1/2-6 PLT	
11	803-304C	NUT HEX WHIZ 5/8-11 PLT	
12	804-013C	WASHER LOCK SPRING 3/8 PLT	
13	805-105C	PIN COTTER 1/4 X 2 1/2 PLT	
14	890-836C	BUSHING 1 1/4X1X1/2 HRD	
15	890-850C	BUSHING 1 1/4X1X5/8	
16	331-543D	HITCH HOLDER	

Hitch Main Frame

Applies to Models: RCBM6615 S/N 944729-, RCB6615 S/N 944729-

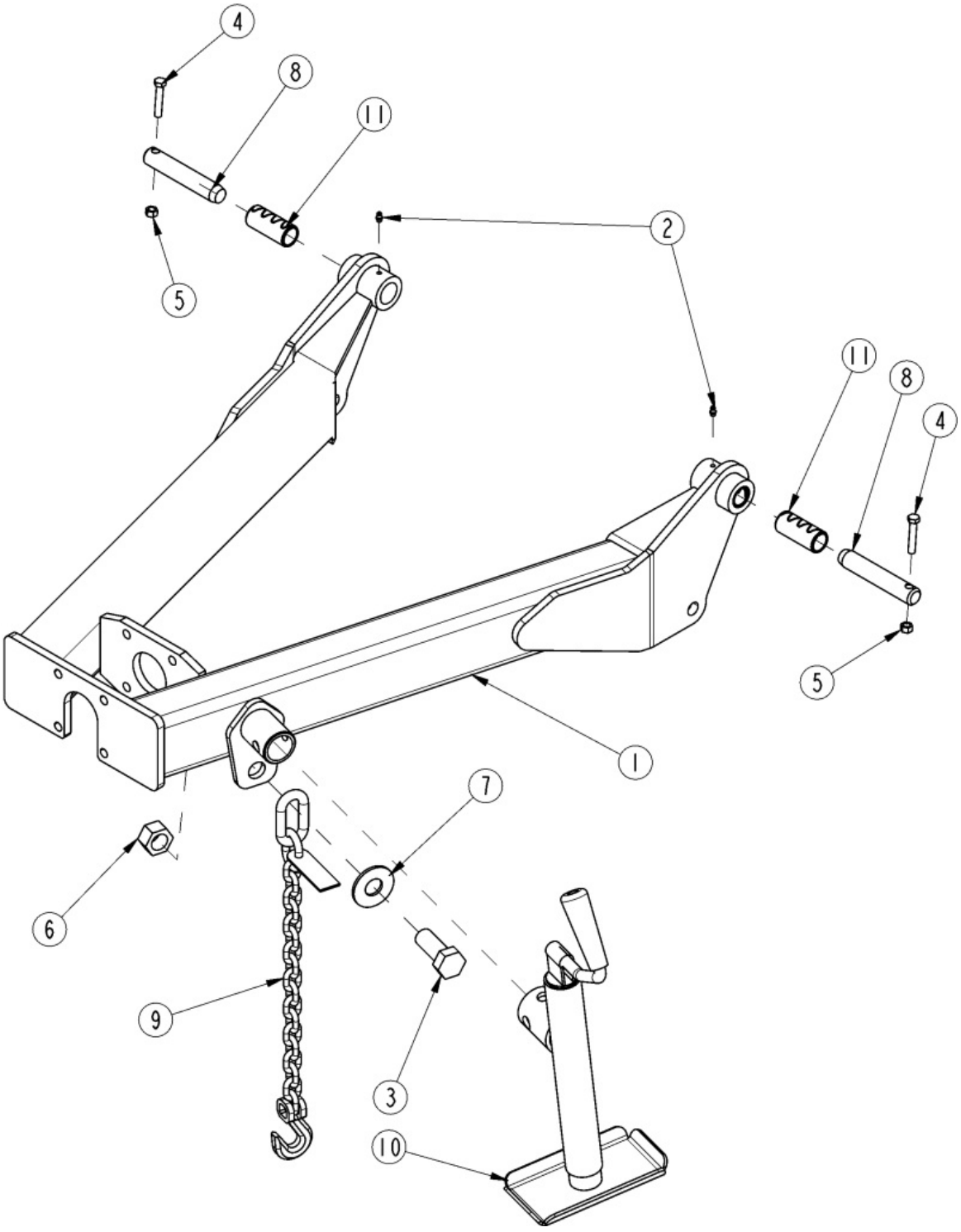

Hitch Main Frame

Applies to Models: RCBM6615 S/N 944729-, RCB6615 S/N 944729-

Ref.	Part No.	Part Description	Comments
	DWG26556	Drawing Image Number	
1	330-222H	HITCH	
2	800-080C	GREASE ZERK 1/4-28 THD FORMING	
3	802-096C	HHCS 1-8X2 1/2 GR5	
4	802-143C	HHCS 3/8-16X2 GR5	
5	803-013C	NUT LOCK 3/8-16 PLT	
6	803-316C	NUT HEX LOCK 1-8 PLT	
7	804-028C	WASHER FLAT 1 USS PLT	
8	805-292C	PIN 1.0X4.42 USBL HRD PLT	
9	890-182C	SAFETY CHAIN 10000 LB	
10	890-786C	SIDEWIND JACK 7000 LB	
11	890-970C	BUSHING 1.25ODX1.00IDX2.87	

Hitch Pintel

Applies to Models: RCBM6615 S/N 944729-, RCB6615 S/N 944729-

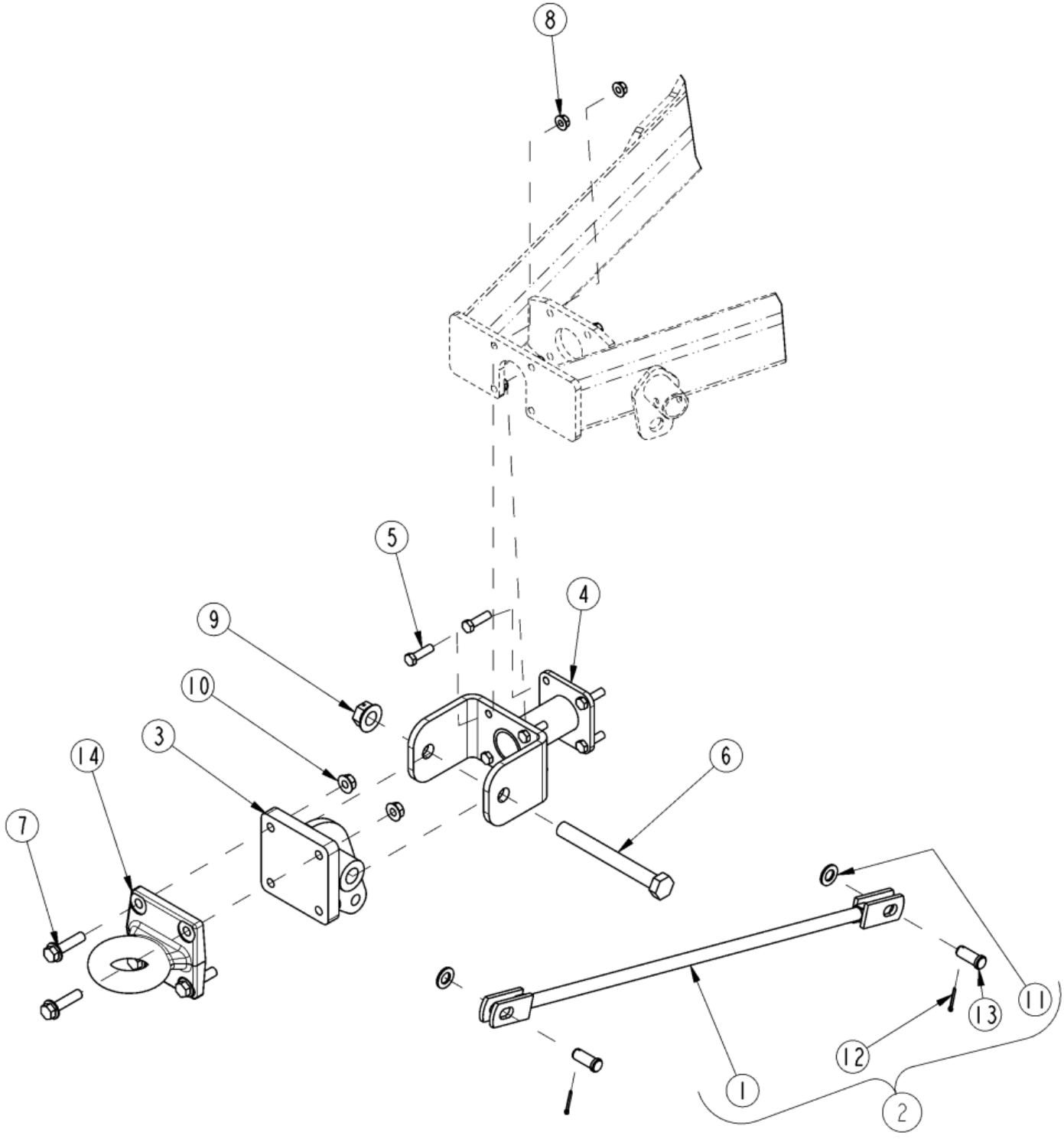

Hitch Pintel

Applies to Models: RCBM6615 S/N 944729-, RCB6615 S/N 944729-

Ref.	Part No.	Part Description	Comments
	DWG 26570	Drawing Image Number	
	330-334A	PINTLE HITCH	
		*	
1	318-006H	WLDMT. CLEVIS LEVEL ROD	
2	318-053L	ASSY. LEVEL ROD CLEVIS	
3	318-556H	WLDMT. PINTLE HITCH CLEVIS	
4	330-223H	YOKE HITCH	
5	802-053C	HHCS 5/8-11X1 3/4 GR5 FTHD	S/N 615584+
5	802-082C	HHCS 1/2-13X1 3/4 GR5 FTHD	S/N 615583-
6	802-877C	HHCS 1-8X9 GR8 SPTHD	
7	802-729C	HFS 5/8-11X2 1/2 GR8 PLT	
8	803-304C	NUT HEX WHIZ 5/8-11 PLT	S/N 615584+
8	803-037C	NUT HEX WHIZ 1/2-13 PLT GR5	S/N 615583-
9	803-258C	NUT HEX FLG LOCK 1-8 GR B PLT	
10	803-304C	NUT HEX WHIZ 5/8-11 PLT	
11	804-025C	WASHER FLAT 3/4 SAE PLT	
12	805-045C	PIN COTTER 5/32 X 1 1/4 LG	
13	805-083C	PIN CLVS .75X1.50 USBL HT	
14	890-806C	PINTLE HOOK SQ.BASE BDB1250-15	

Hitch Standard Pivoting Clevis

Applies to Models: RCBM6615 S/N 944729-, RCB6615 S/N 944729-

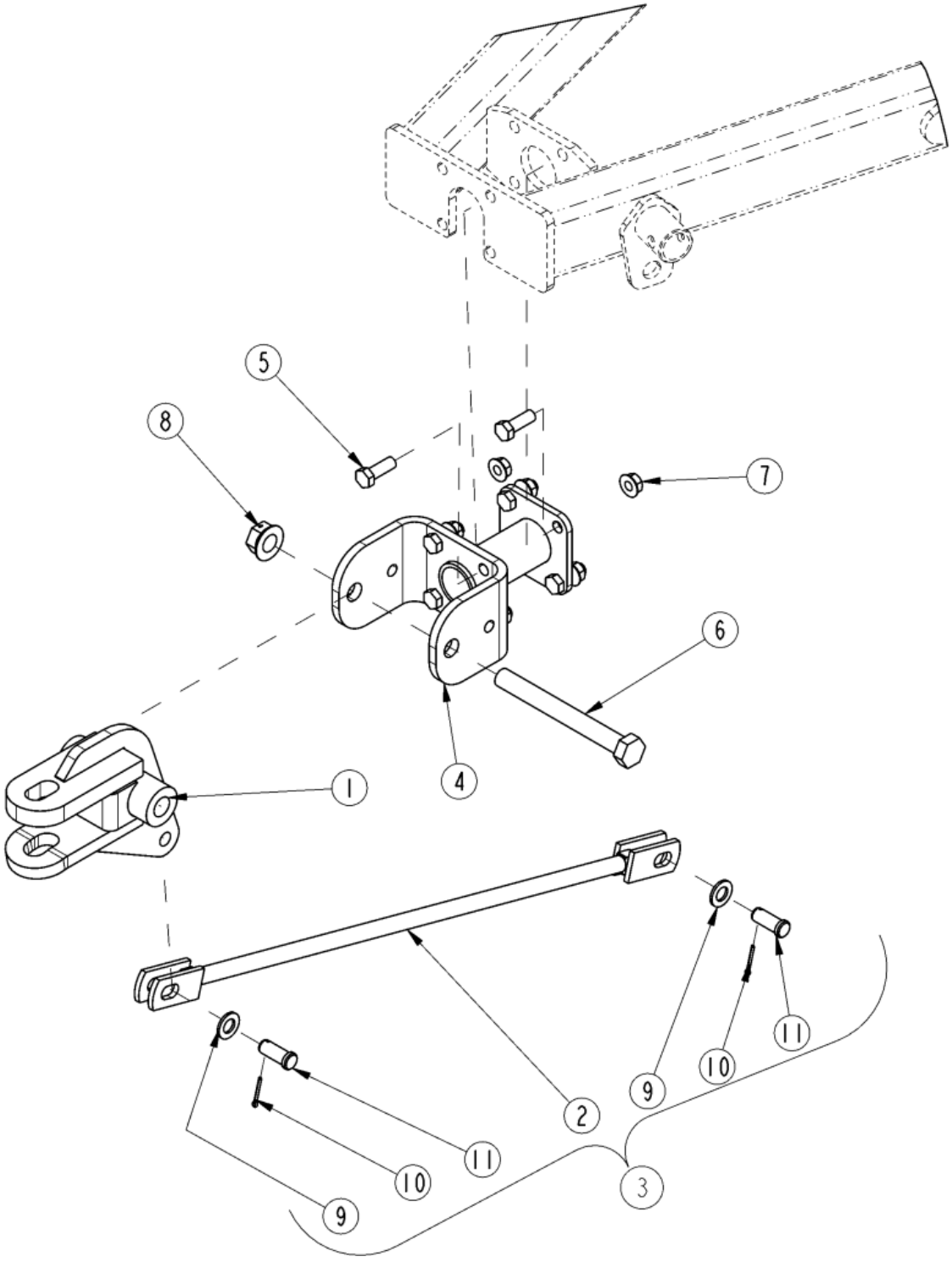

Hitch Standard Pivoting Clevis

Applies to Models: RCBM6615 S/N 944729-, RCB6615 S/N 944729-

Ref.	Part No.	Part Description	Comments
	DWG 26557	Drawing Image Number	
	330-225A	STANDARD HITCH	
		*	
1	318-005H	WLDMT. TONGUE CLEVIS	
2	318-006H	WLDMT. CLEVIS LEVEL ROD	
3	318-053L	ASSY. LEVEL ROD CLEVIS	
4	330-223H	YOKE HITCH	
5	802-053C	HHCS 5/8-11X1 3/4 GR5 FTHD	S/N 615584+
5	802-082C	HHCS 1/2-13X1 3/4 GR5 FTHD	S/N 615583-
6	802-877C	HHCS 1-8X9 GR8 SPTHD	
7	803-304C	NUT HEX WHIZ 5/8-11 PLT	S/N 615584+
7	803-037C	NUT HEX WHIZ 1/2-13 PLT GR5	S/N 615583-
8	803-258C	NUT HEX FLG LOCK 1-8 GR B PLT	
9	804-025C	WASHER FLAT 3/4 SAE PLT	
10	805-045C	PIN COTTER 5/32 X 1 1/4 LG	
11	805-083C	PIN CLVS .75X1.50 USBL HT	

Hitch Swivel

Applies to Models: RCBM6615 S/N 944729-, RCB6615 S/N 944729-

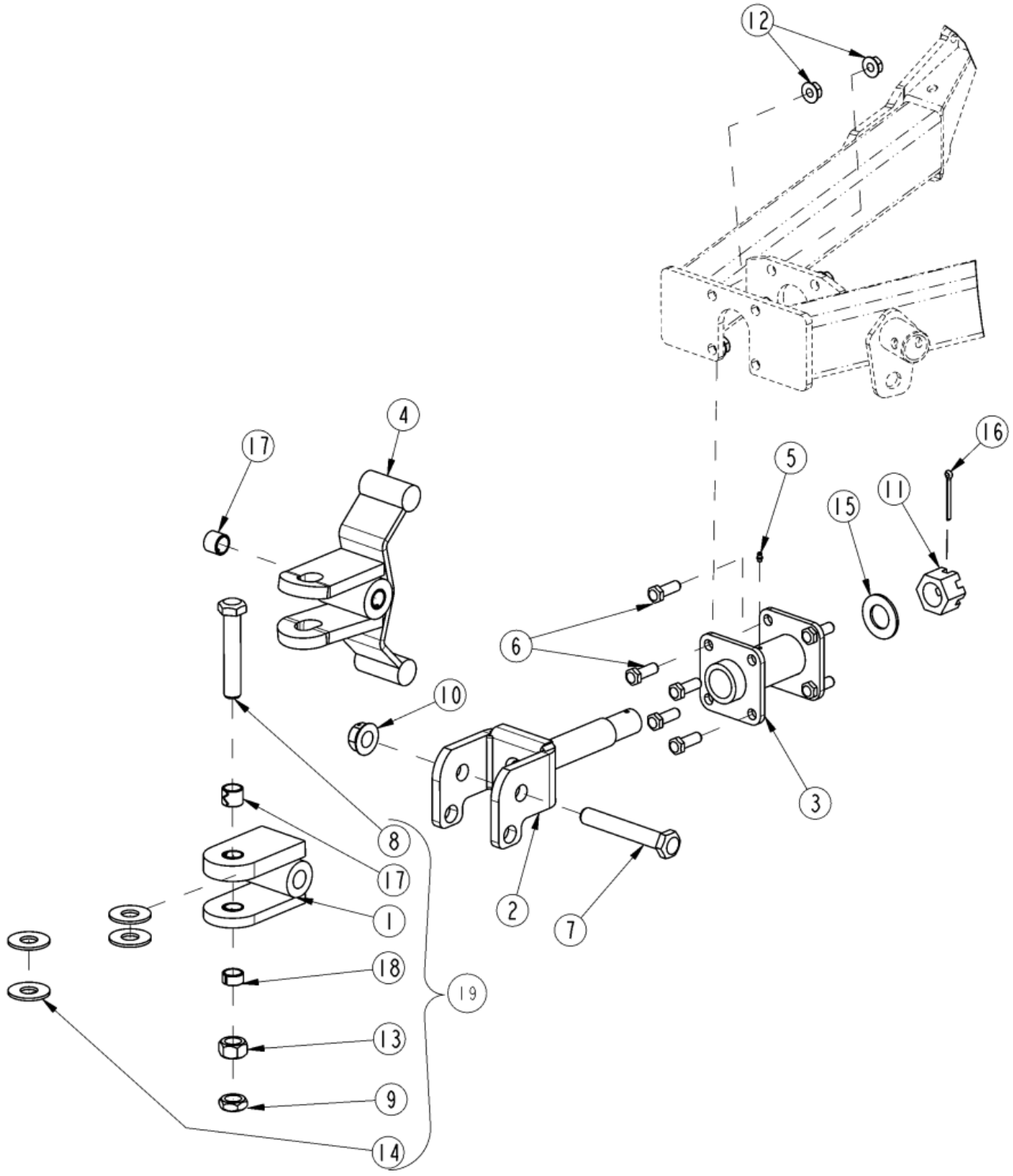

Hitch Swivel

Applies to Models: RCBM6615 S/N 944729-, RCB6615 S/N 944729-

Ref.	Part No.	Part Description	Comments
	DWG 26571	Drawing Image Number	
	330-332A	SWIVEL HITCH	
		*	
1	318-357H	CLEVIS WELDMENT	
2	331-211H	SWIVEL HITCH SHAFT WLDMT	
3	330-271H	SWIVEL RECEIVER	
4	330-321H	CLEVIS SWIVEL	Replaced By 330-648S
5	800-080C	GREASE ZERK 1/4-28 THD FORMING	
6	802-053C	HHCS 5/8-11X1 3/4 GR5 FTHD	S/N 615584+
6	802-082C	HHCS 1/2-13X1 3/4 GR5 FTHD	S/N 615583-
7	802-074C	HHCS 1-8X6 1/2 GR5	
8	802-205C	HHCS 1-8X5 1/2 GR5	
9	803-030C	NUT HEX JAM 1-8 PLT	
10	803-258C	NUT HEX FLG LOCK 1-8 GR B PLT	
11	803-301C	NUT HEX SLOTTED 1 1/2-6 PLT	
12	803-304C	NUT HEX WHIZ 5/8-11 PLT	S/N 615584+
12	803-037C	NUT HEX WHIZ 1/2-13 PLT GR5	S/N 615583-
13	803-031C	NUT HEX 1-8 PLT	
14	804-028C	WASHER FLAT 1 USS PLT	
15	804-171C	WASHER FLAT 1.50 HARD ASTMF436	
16	805-105C	PIN COTTER 1/4 X 2 1/2 PLT	
17	890-005C	BUSHING CYL 1 1/4 X 1 X 1	
18	890-850C	BUSHING 1 1/4X1X5/8	
19	330-648S	ASSY SWIVEL CLEVIS	

Leveling Rod (66 Series)

Applies to Models: RCBM6615 S/N 944729-, RCB6615 S/N 944729-

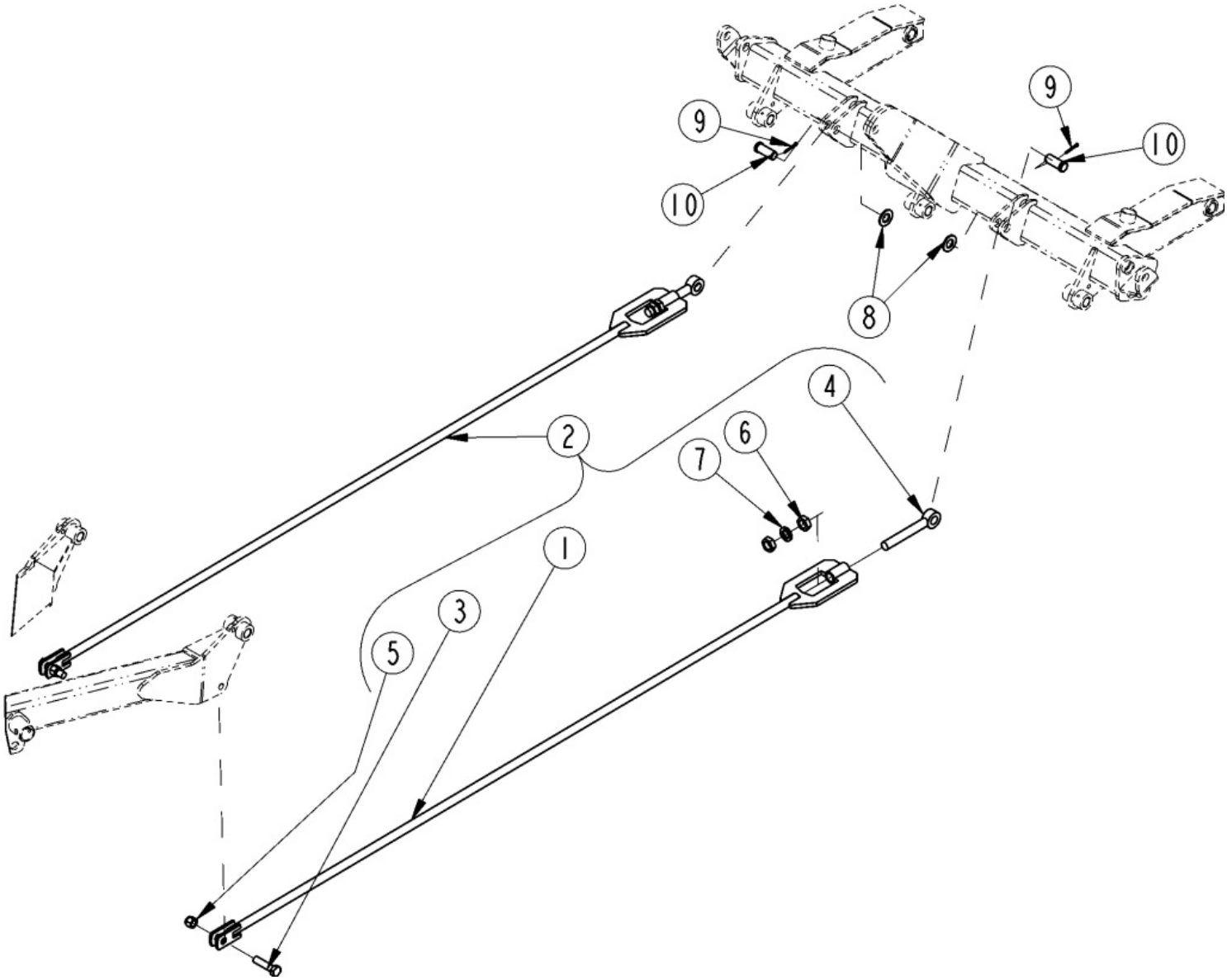

Leveling Rod (66 Series)

Applies to Models: RCBM6615 S/N 944729-, RCB6615 S/N 944729-

Ref.	Part No.	Part Description	Comments
	DWG 27840	Drawing Image Number	
1	330-195H	LEVELING ROD	
2	330-196L	ASY LEVELING ROD	
3	802-552C	HHCS 3/4-10X3 GR8	
4	802-754C	EYE BOLT 1-8X7 1/2 LG PLT SP	
5	803-025C	NUT HEX 3/4-10 PLT NYLOCK	
6	803-030C	NUT HEX JAM 1-8 PLT	
7	804-027C	WASHER LOCK SPRING 1 PLT	
8	804-029C	WASHER FLAT 1 SAE	
9	805-104C	PIN COTTER 3/16 X 1 1/2 PLT	
10	805-374C	PIN CLVS 1.0X2.06 USBL	

Toolbox

Applies to Models: RCBM6615 S/N 944729-, RCB6615 S/N 944729-

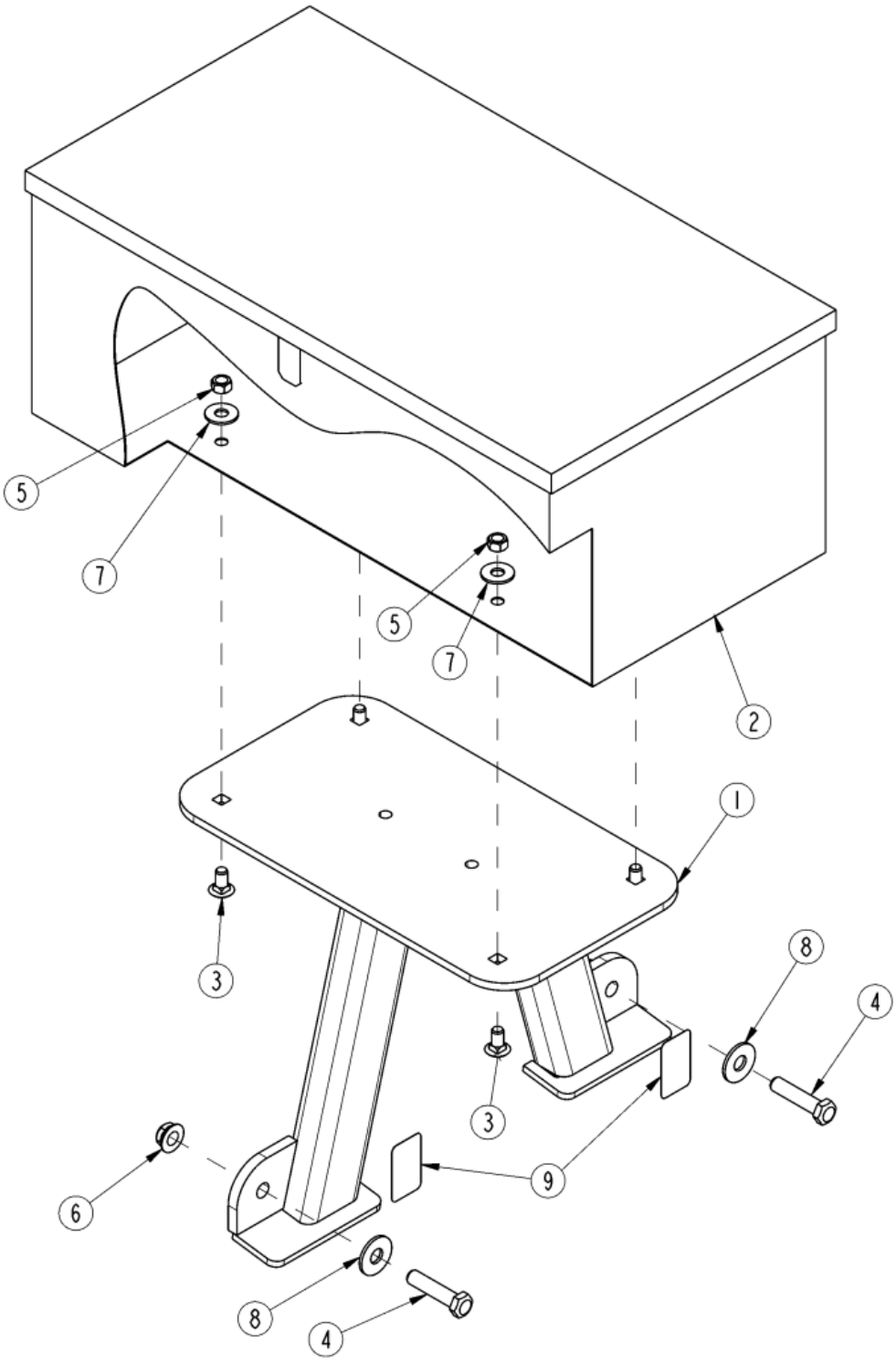

Toolbox

Applies to Models: RCBM6615 S/N 944729-, RCB6615 S/N 944729-

Ref.	Part No.	Part Description	Comments
	DWG33273	Drawing Image Number	
	330-869A	TOOLBOX	
		*	
1	330-870H	TOOLBOX PEDESTAL	
2	330-881S	TOOLBOX WITH HOLES	
3	802-183C	RHSNB 1/2-13X1 GR5	
4	802-281C	HHCS 5/8-11X2 3/4 GR5	
5	803-019C	NUT LOCK 1/2-13 PLT	
6	803-263C	NUT HEX FLANGE LOCK 5/8-11 PLT	
7	804-017C	WASHER FLAT 1/2 USS PLT	
8	804-019C	WASHER FLAT 5/8 USS PLT	
9	818-230C	DECAL RED REFLECTOR	

Axle Standard Center Deck S/N 774847-

Applies to Models: RCBM6615 S/N 944729-, RCB6615 S/N 944729-

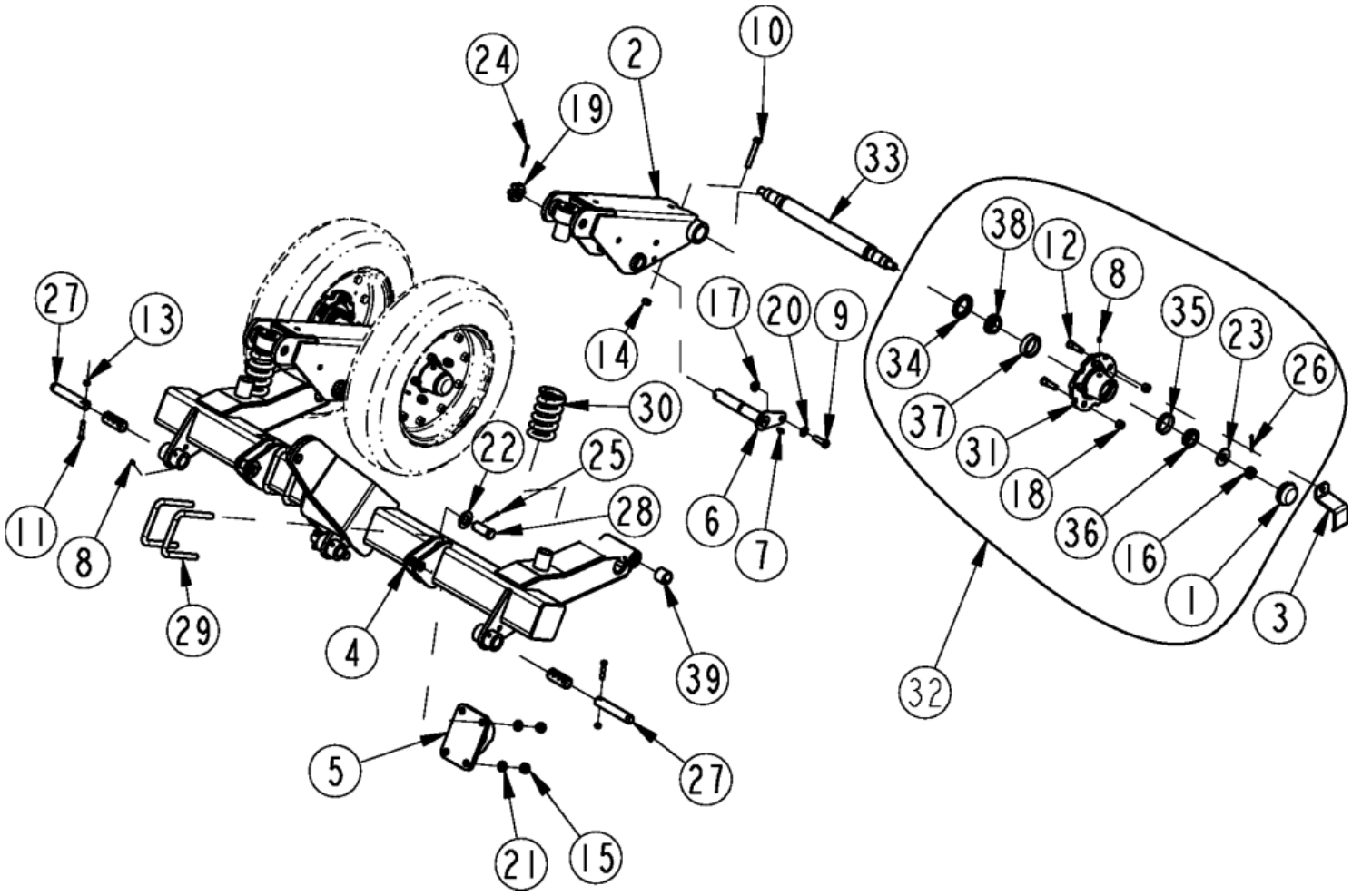

Axle Standard Center Deck S/N 774847-

Applies to Models: RCBM6615 S/N 944729-, RCB6615 S/N 944729-

Ref.	Part No.	Part Description	Comments
	DWG27728	Drawing Image Number	
1	200-001D	HUB GREASE CAP	
2	330-179H	TRAILING ARM CENTER	
3	330-331D	PROTECTOR DUST CAP	S/N 661724+
4	330-345H	AXLE CENTER STD REP	
5	330-415H	TOW LUG	
6	330-607H	PIVOT PIN TRAILING ARM	
7	800-073C	GREASE ZERK 1/4-28 X 90-DEG	
8	800-080C	GREASE ZERK 1/4-28 THD FORMING	
9	802-082C	HHCS 1/2-13X1 3/4 GR5 FTHD	
10	802-099C	HHCS 1/2-13X3 1/4 GR5	
11	802-143C	HHCS 3/8-16X2 GR5	
12	802-779C	HUB STUD 1/2-20X1.88 GR5	
13	803-013C	NUT LOCK 3/8-16 PLT	
14	803-019C	NUT LOCK 1/2-13 PLT	
15	803-024C	NUT LOCK 5/8-11 PLT	
16	803-053C	NUT HEX SLOTTED 3/4-16	
17	803-169C	NUT HEX FLG LOCK 1/2-13 PLT	
18	803-310C	NUT HEX 1/2-20 X 5/8 HIGH	
19	803-381C	NUT HEX JAM SLOTTED 1 1/4-7	
20	804-016C	WASHER FLAT 1/2 SAE PLT	
21	804-022C	WASHER LOCK SPRING 5/8 PLT	
22	804-029C	WASHER FLAT 1 SAE	
23	804-088C	WASHER FLAT #8 SAE PLT	
23	804-216C	RPBY 804-008C	Obsolete
24	805-058C	PIN COTTER 3/16 X 2	
26	805-246C	PIN COTTER 5/32 X 1 3/4 LG	
25	805-104C	PIN COTTER 3/16 X 1 1/2 PLT	
27	805-292C	PIN 1.0X4.42 USBL HRD PLT	
28	805-374C	PIN CLVS 1.0X2.06 USBL	
29	806-213C	U-BOLT 5/8-11 X 4 17/32 X 6	
30	807-271C	SPRING COMP 3.20OD .63W 5.5L	
31	815-243C	HUB 5-BOLT W/CUPS/STUDS	
32	815-244C	HUB 5-BOLT COMPLETE	
33	815-291C	SPINDLE, DUAL AXLE	
34	816-497C	SEAL 1.75ID CR17617	
35	822-020C	BRG CUP LM-67010	
36	822-021C	BRG CONE 1.25ID LM-67048	
37	822-033C	BRG CUP LM-48510	
38	822-034C	BRG CONE LM-48548	
39	891-177C	BHG 1.50ODX1.25X1.38	

Axle Standard Center Deck S/N 774848+

Applies to Models: RCBM6615 S/N 944729-, RCB6615 S/N 944729-

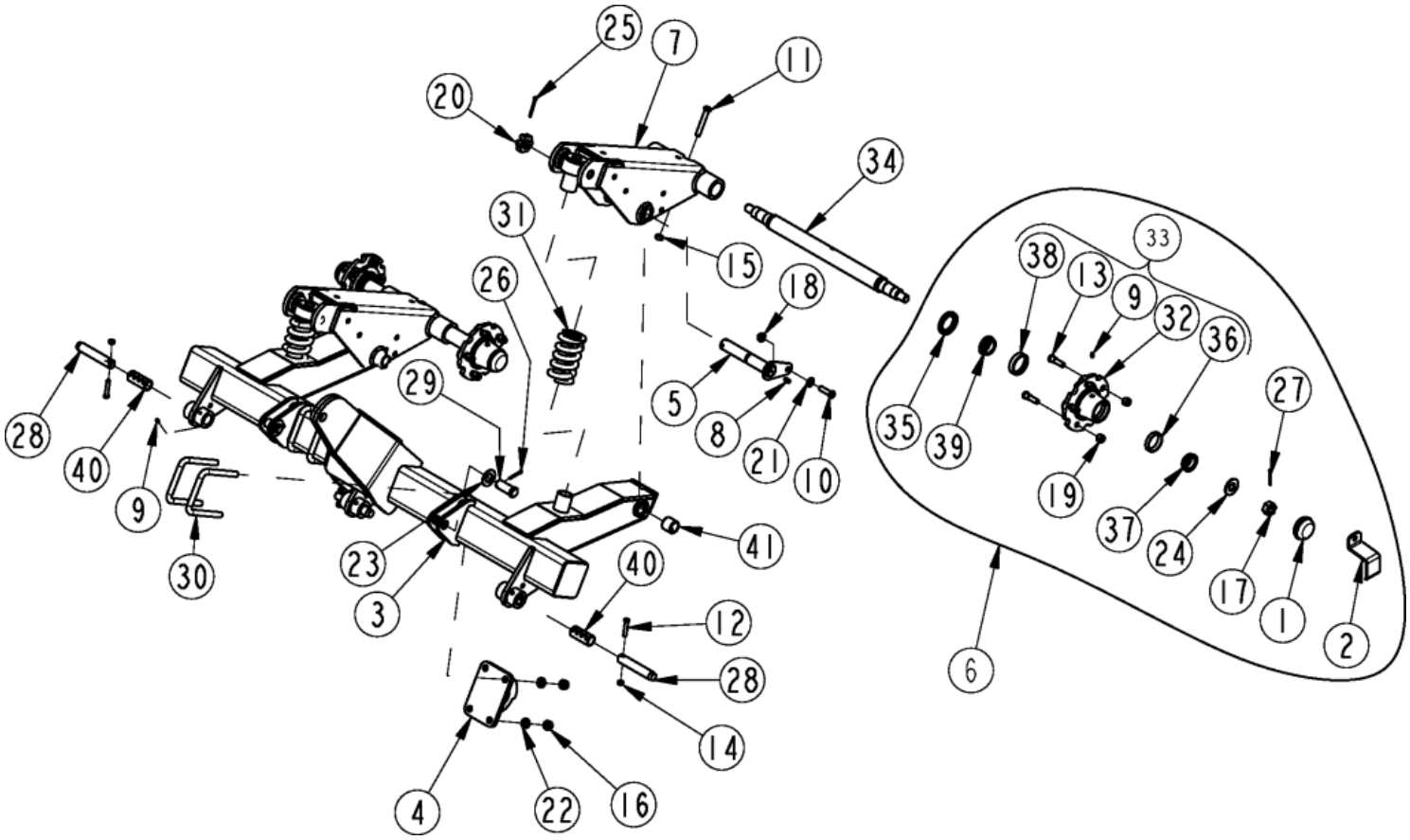

Axle Standard Center Deck S/N 774848+

Applies to Models: RCBM6615 S/N 944729-, RCB6615 S/N 944729-

Ref.	Part No.	Part Description	Comments
	DWG35228	Drawing Image Number	
1	200-001D	HUB GREASE CAP	
2	330-331D	PROTECTOR DUST CAP	
3	330-345H	AXLE CENTER STD REP	
4	330-415H	TOW LUG	
5	330-607H	PIVOT PIN TRAILING ARM	
6	330-938K	HUB 5 BOLT COMPLETE	
7	331-099H	TRAILING ARM CENTER	
8	800-073C	GREASE ZERK 1/4-28 X 90-DEG	
9	800-080C	GREASE ZERK 1/4-28 THD FORMING	
10	802-082C	HHCS 1/2-13X1 3/4 GR5 FTHD	
11	802-099C	HHCS 1/2-13X3 1/4 GR5	
12	802-143C	HHCS 3/8-16X2 GR5	
13	802-779C	HUB STUD 1/2-20X1.88 GR5	
14	803-013C	NUT LOCK 3/8-16 PLT	
15	803-019C	NUT LOCK 1/2-13 PLT	
16	803-024C	NUT LOCK 5/8-11 PLT	
17	803-029C	NUT HEX SLOTTED 7/8-14 PLT	
18	803-169C	NUT HEX FLG LOCK 1/2-13 PLT	
19	803-310C	NUT HEX 1/2-20 X 5/8 HIGH	
20	803-381C	NUT HEX JAM SLOTTED 1 1/4-7	
21	804-016C	WASHER FLAT 1/2 SAE PLT	
22	804-022C	WASHER LOCK SPRING 5/8 PLT	
23	804-029C	WASHER FLAT 1 SAE	
24	804-055C	WASHER SPINDLE - 7/8	
25	805-058C	PIN COTTER 3/16 X 2	
26	805-104C	PIN COTTER 3/16 X 1 1/2 PLT	
27	805-246C	PIN COTTER 5/32 X 1 3/4 LG	
28	805-292C	PIN 1.0X4.42 USBL HRD PLT	
29	805-374C	PIN CLVS 1.0X2.06 USBL	
30	806-213C	U-BOLT 5/8-11 X 4 17/32 X 6	
31	807-271C	SPRING COMP 3.20OD .63W 5.5L	
32	815-242C	HUB 5-BOLT CASTING	
33	815-243C	HUB 5-BOLT W/CUPS/STUDS	
34	815-425C	SPINDLE, DUAL BOLT-ON 7/8-14	
35	816-497C	SEAL 1.75ID CR17617	
36	822-020C	BRG CUP LM-67010	
37	822-021C	BRG CONE 1.25ID LM-67048	
38	822-033C	BRG CUP LM-48510	
39	822-034C	BRG CONE LM-48548	
40	890-970C	BUSHING 1.25ODX1.00IDX2.87	
41	891-177C	BHG 1.50ODX1.25X1.38	

Axle Standard Wing Deck S/N 774847-

Applies to Models: RCBM6615 S/N 944729-, RCB6615 S/N 944729-

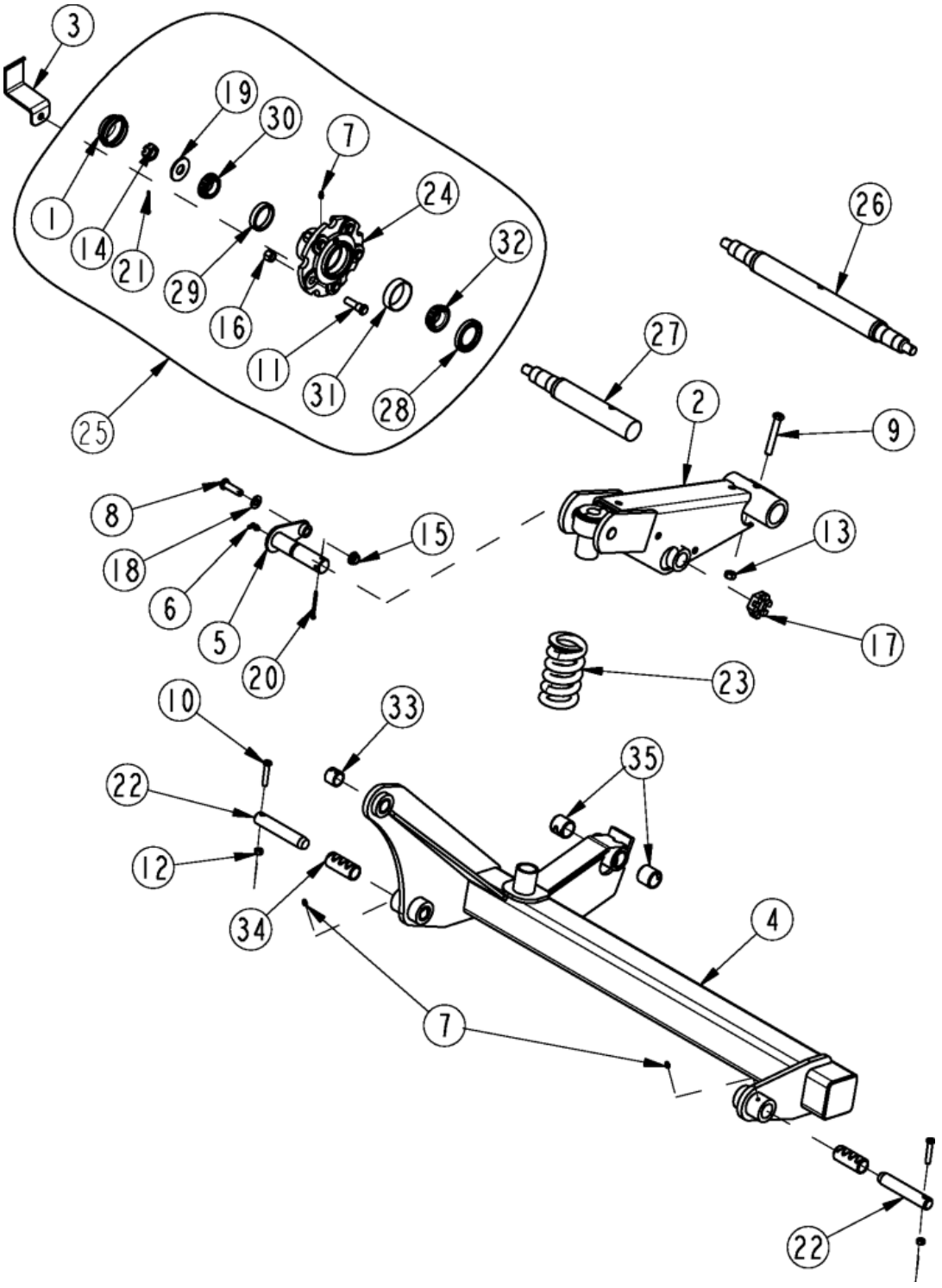

Axle Standard Wing Deck S/N 774847-

Applies to Models: RCBM6615 S/N 944729-, RCB6615 S/N 944729-

Ref.	Part No.	Part Description	Comments
	DWG27729	Drawing Image Number	
1	200-001D	HUB GREASE CAP	
2	330-184H	TRAILING ARM WING	
3	330-331D	PROTECTOR DUST CAP	S/N 661724+
4	330-503H	AXLE WING STD REP RH	
4	330-541H	AXLE WING STD REP LH	
5	330-608H	PIVOT PIN TRAILING ARM WG	
6	800-073C	GREASE ZERK 1/4-28 X 90-DEG	
7	800-080C	GREASE ZERK 1/4-28 THD FORMING	
8	802-082C	HHCS 1/2-13X1 3/4 GR5 FTHD	
9	802-099C	HHCS 1/2-13X3 1/4 GR5	
10	802-143C	HHCS 3/8-16X2 GR5	
11	802-779C	HUB STUD 1/2-20X1.88 GR5	
12	803-013C	NUT LOCK 3/8-16 PLT	
13	803-019C	NUT LOCK 1/2-13 PLT	
14	803-053C	NUT HEX SLOTTED 3/4-16	
15	803-169C	NUT HEX FLG LOCK 1/2-13 PLT	
16	803-310C	NUT HEX 1/2-20 X 5/8 HIGH	
17	803-381C	NUT HEX JAM SLOTTED 1 1/4-7	
18	804-016C	WASHER FLAT 1/2 SAE PLT	
19	804-216C	RPBY 804-008C	
20	805-058C	PIN COTTER 3/16 X 2	
21	805-246C	PIN COTTER 5/32 X 1 3/4 LG	
22	805-292C	PIN 1.0X4.42 USBL HRD PLT	
23	807-271C	SPRING COMP 3.20OD .63W 5.5L	
24	815-243C	HUB 5-BOLT W/CUPS/STUDS	
25	815-244C	HUB 5-BOLT COMPLETE	
26	815-291C	SPINDLE, DUAL AXLE	
27	815-308C	SPINDLE SINGLE BOLT-ON	
28	816-497C	SEAL 1.75ID CR17617	
29	822-020C	BRG CUP LM-67010	
30	822-021C	BRG CONE 1.25ID LM-67048	
31	822-033C	BRG CUP LM-48510	
32	822-034C	BRG CONE LM-48548	
33	890-005C	BUSHING CYL 1 1/4 X 1 X 1	
34	890-970C	BUSHING 1.25ODX1.00IDX2.87	
35	891-177C	BHG 1.50ODX1.25X1.38	

Axle Standard Wing Deck S/N 774848+

Applies to Models: RCBM6615 S/N 944729-, RCB6615 S/N 944729-

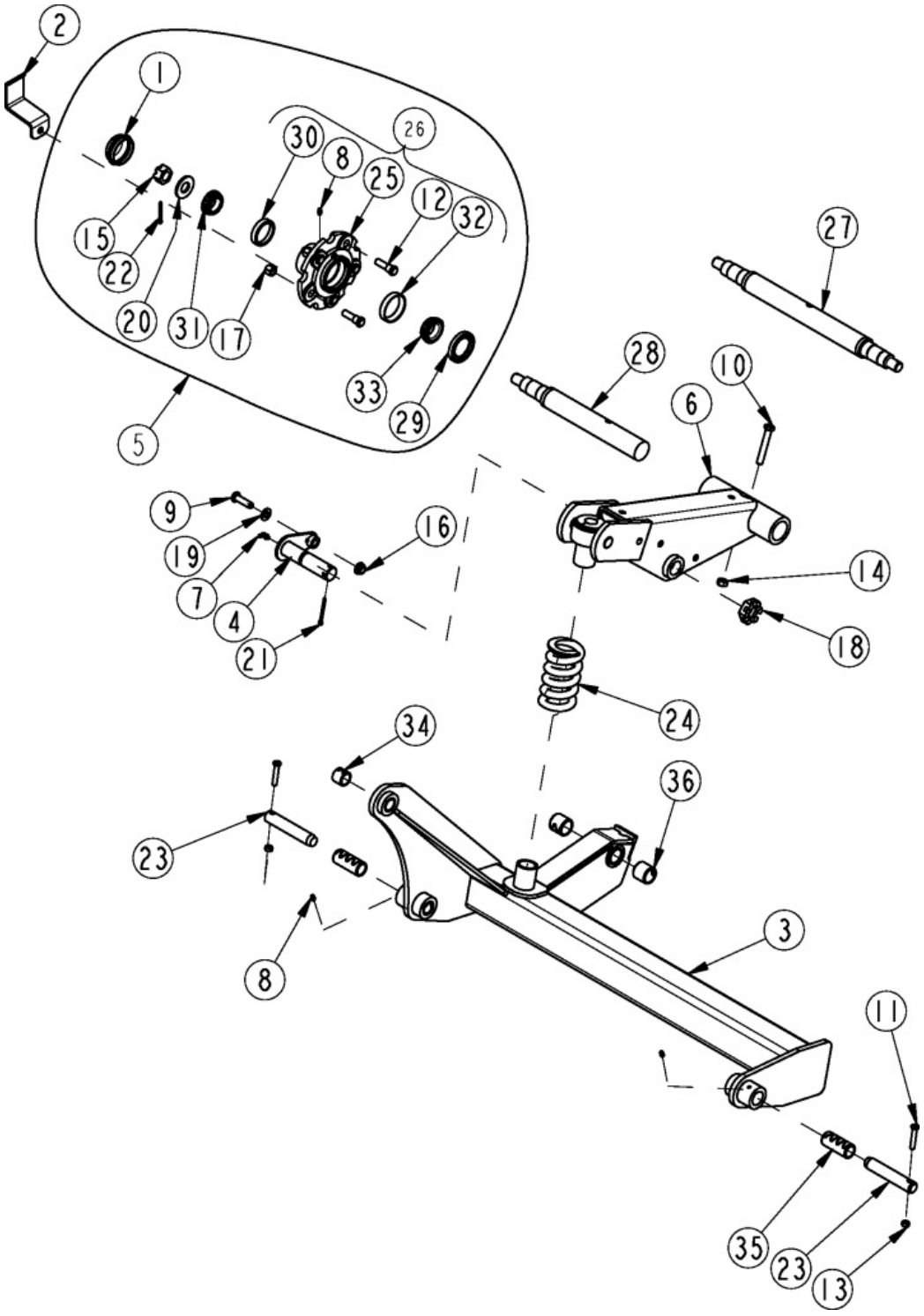

Axle Standard Wing Deck S/N 774848+

Applies to Models: RCBM6615 S/N 944729-, RCB6615 S/N 944729-

Ref.	Part No.	Part Description	Comments
	DWG35227	Drawing Image Number	
1	200-001D	HUB GREASE CAP	
2	330-331D	PROTECTOR DUST CAP	
3	330-503H	AXLE WING STD REP RH	
3	330-541H	AXLE WING STD REP LH	
4	330-608H	PIVOT PIN TRAILING ARM WG	
5	330-938K	HUB 5 BOLT COMPLETE	
6	331-100H	TRAILING ARM WING	
7	800-073C	GREASE ZERK 1/4-28 X 90-DEG	
8	800-080C	GREASE ZERK 1/4-28 THD FORMING	
9	802-082C	HHCS 1/2-13X1 3/4 GR5 FTHD	
10	802-099C	HHCS 1/2-13X3 1/4 GR5	
11	802-143C	HHCS 3/8-16X2 GR5	
12	802-779C	HUB STUD 1/2-20X1.88 GR5	
13	803-013C	NUT LOCK 3/8-16 PLT	
14	803-019C	NUT LOCK 1/2-13 PLT	
15	803-029C	NUT HEX SLOTTED 7/8-14 PLT	
16	803-169C	NUT HEX FLG LOCK 1/2-13 PLT	
17	803-310C	NUT HEX 1/2-20 X 5/8 HIGH	
18	803-381C	NUT HEX JAM SLOTTED 1 1/4-7	
19	804-016C	WASHER FLAT 1/2 SAE PLT	
20	804-055C	WASHER SPINDLE - 7/8	
21	805-058C	PIN COTTER 3/16 X 2	
22	805-246C	PIN COTTER 5/32 X 1 3/4 LG	
23	805-292C	PIN 1.0X4.42 USBL HRD PLT	
24	807-271C	SPRING COMP 3.20OD .63W 5.5L	
25	815-242C	HUB 5-BOLT CASTING	
26	815-243C	HUB 5-BOLT W/CUPS/STUDS	
27	815-429C	SPINDLE, DUAL BOLT-ON 7/8-14	29" AL, 25.5" AL & 25.5" ALFF
27	815-431C	SPINDLE, DUAL BOLT-ON 7/8-14	ALL OTHER TIRES
28	815-430C	SPINDLE, SINGLE BOLT-ON 7/8-14	29" AL, 25.5" AL & 25.5" ALFF
28	815-432C	SPINDLE, SINGLE BOLT-ON 7/8-14	ALL OTHER TIRES
29	816-497C	SEAL 1.75ID CR17617	
30	822-020C	BRG CUP LM-67010	
31	822-021C	BRG CONE 1.25ID LM-67048	
32	822-033C	BRG CUP LM-48510	
33	822-034C	BRG CONE LM-48548	
34	890-005C	BUSHING CYL 1 1/4 X 1 X 1	
35	890-970C	BUSHING 1.25ODX1.00IDX2.87	
36	891-177C	BHG 1.50ODX1.25X1.38	

Axle Tandem Center Deck S/N 792271-

Applies to Models: RCBM6615 S/N 944729-, RCB6615 S/N 944729-

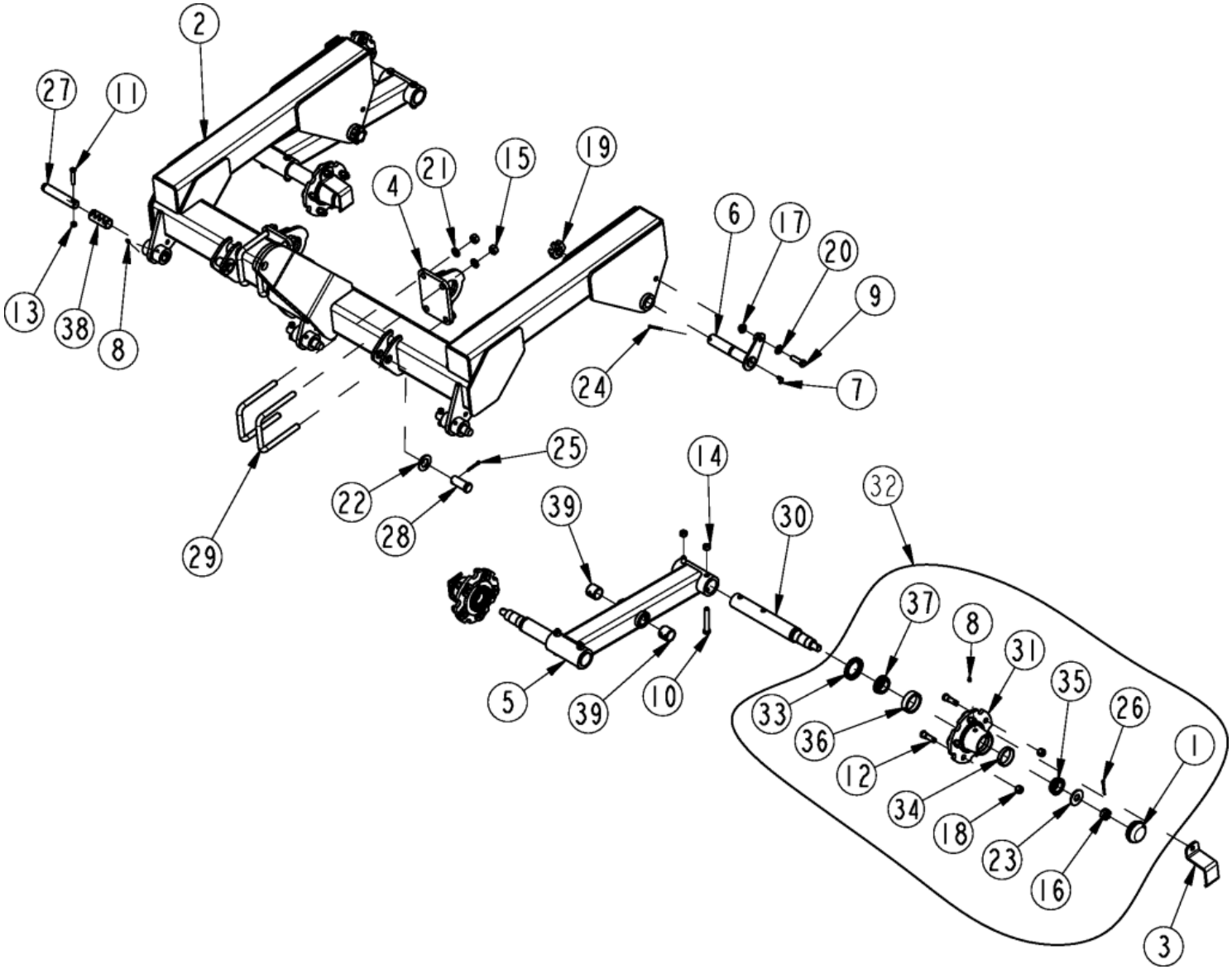

Axle Tandem Center Deck S/N 792271-

Applies to Models: RCBM6615 S/N 944729-, RCB6615 S/N 944729-

Ref.	Part No.	Part Description	Comments
	DWG27719	Drawing Image Number	
1	200-001D	HUB GREASE CAP	
2	330-289H	AXLE CENTER TANDEM	
3	330-331D	PROTECTOR DUST CAP	S/N 661724+
4	330-415H	TOW LUG	
5	330-612H	TANDEM ARM	
6	330-616H	PIVOT PIN TANDEM ARM	
7	800-073C	GREASE ZERK 1/4-28 X 90-DEG	
8	800-080C	GREASE ZERK 1/4-28 THD FORMING	
9	802-082C	HHCS 1/2-13X1 3/4 GR5 FTHD	
10	802-099C	HHCS 1/2-13X3 1/4 GR5	
11	802-143C	HHCS 3/8-16X2 GR5	
12	802-779C	HUB STUD 1/2-20X1.88 GR5	
13	803-013C	NUT LOCK 3/8-16 PLT	
14	803-019C	NUT LOCK 1/2-13 PLT	
15	803-024C	NUT LOCK 5/8-11 PLT	
16	803-053C	NUT HEX SLOTTED 3/4-16	
17	803-169C	NUT HEX FLG LOCK 1/2-13 PLT	
18	803-310C	NUT HEX 1/2-20 X 5/8 HIGH	
19	803-381C	NUT HEX JAM SLOTTED 1 1/4-7	
20	804-016C	WASHER FLAT 1/2 SAE PLT	
21	804-022C	WASHER LOCK SPRING 5/8 PLT	
22	804-029C	WASHER FLAT 1 SAE	
23	804-008C	WASHER FLAT 3/4 HARD USS	
23	804-216C	RPBY 804-008C	Obsolete
24	805-058C	PIN COTTER 3/16 X 2	
25	805-104C	PIN COTTER 3/16 X 1 1/2 PLT	
26	805-246C	PIN COTTER 5/32 X 1 3/4 LG	
27	805-292C	PIN 1.0X4.42 USBL HRD PLT	
28	805-374C	PIN CLVS 1.0X2.06 USBL	
29	806-213C	U-BOLT 5/8-11 X 4 17/32 X 6	
30	815-241C	SPINDLE-SINGLE BOLT-ON	
31	815-243C	HUB 5-BOLT W/CUPS/STUDS	
32	815-244C	HUB 5-BOLT COMPLETE	
33	816-497C	SEAL 1.75ID CR17617	
34	822-020C	BRG CUP LM-67010	
35	822-021C	BRG CONE 1.25ID LM-67048	
36	822-033C	BRG CUP LM-48510	
37	822-034C	BRG CONE LM-48548	
38	890-970C	BUSHING 1.25ODX1.00IDX2.87	
39	891-177C	BHG 1.50ODX1.25X1.38	

Axle Tandem Center Deck S/N 792272+

Applies to Models: RCBM6615 S/N 944729-, RCB6615 S/N 944729-

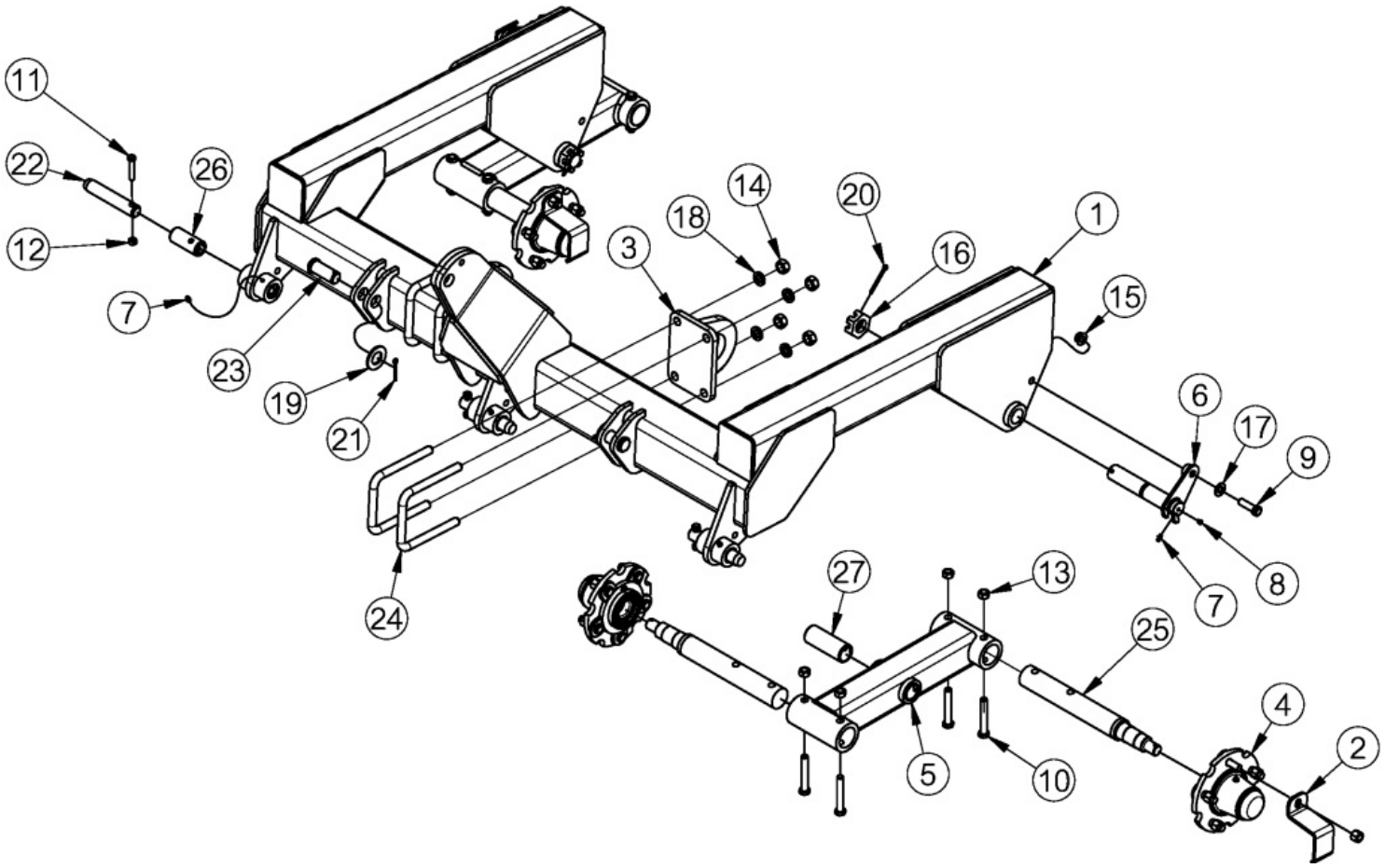

Axle Tandem Center Deck S/N 792272+

Applies to Models: RCBM6615 S/N 944729-, RCB6615 S/N 944729-

Ref.	Part No.	Part Description	Comments
	DWG35219	Drawing Image Number	
1	330-289H	AXLE CENTER TANDEM	
2	330-331D	PROTECTOR DUST CAP	
3	330-415H	TOW LUG	
4	330-938K	HUB 5 BOLT COMPLETE	
5	331-202H	TANDEM ARM, SHORT	
6	334-465H	WALKING TANDEM PIVOT PIN	
7	800-001C	GREASE ZERK STRAIGHT 1/4-28	
8	801-229C	SCREW SLOTTED HEX 1/4-28X3/16	
9	802-082C	HHCS 1/2-13X1 3/4 GR5 FTHD	
10	802-099C	HHCS 1/2-13X3 1/4 GR5	
11	802-143C	HHCS 3/8-16X2 GR5	
12	803-013C	NUT LOCK 3/8-16 PLT	
13	803-019C	NUT LOCK 1/2-13 PLT	
14	803-024C	NUT LOCK 5/8-11 PLT	
15	803-169C	NUT HEX FLG LOCK 1/2-13 PLT	
16	803-381C	NUT HEX JAM SLOTTED 1 1/4-7	
17	804-016C	WASHER FLAT 1/2 SAE PLT	
18	804-022C	WASHER LOCK SPRING 5/8 PLT	
19	804-029C	WASHER FLAT 1 SAE	
20	805-058C	PIN COTTER 3/16 X 2	
21	805-104C	PIN COTTER 3/16 X 1 1/2 PLT	
22	805-292C	PIN 1.0X4.42 USBL HRD PLT	
23	805-374C	PIN CLVS 1.0X2.06 USBL	
24	806-213C	U-BOLT 5/8-11 X 4 17/32 X 6	
25	815-433C	SPINDLE, SINGLE BOLT-ON 7/8-14	
26	890-970C	BUSHING 1.25ODX1.00IDX2.87	
27	891-999C	BUSHING 1.50ODX1.25X3.93	S/N 1538169+
27	891-177C	BHG 1.50ODX1.25X1.38	S/N 1538168-

Axle Tandem Wing Deck S/N 792271-

Applies to Models: RCBM6615 S/N 944729-, RCB6615 S/N 944729-

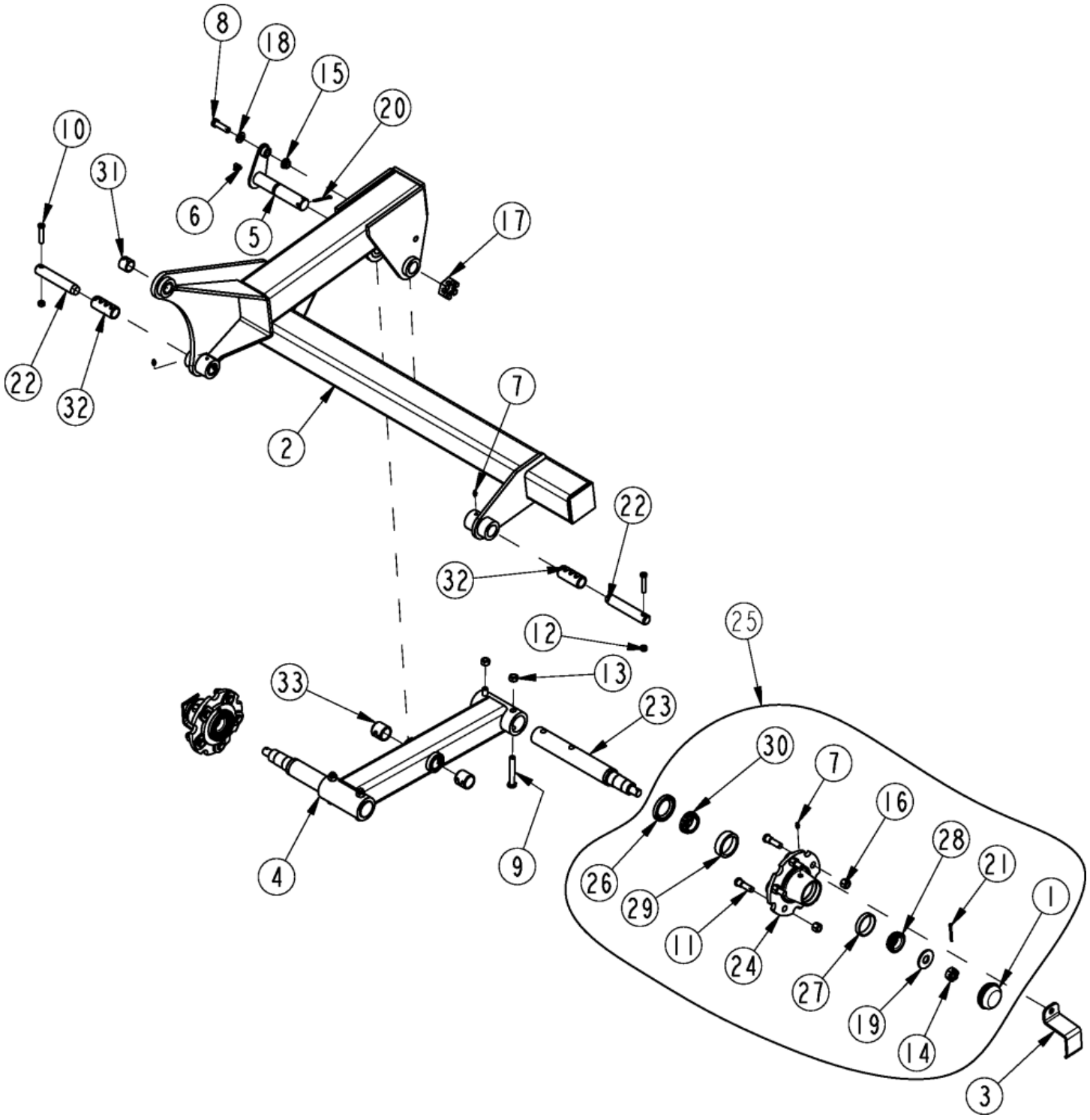

Axle Tandem Wing Deck S/N 792271-

Applies to Models: RCBM6615 S/N 944729-, RCB6615 S/N 944729-

Ref.	Part No.	Part Description	Comments
	DWG27720	Drawing Image Number	
1	200-001D	HUB GREASE CAP	
2	330-293H	AXLE RH TANDEM	
2	330-298H	AXLE LH TANDEM	
3	330-331D	PROTECTOR DUST CAP	S/N 661724+
4	330-612H	TANDEM ARM	
5	330-616H	PIVOT PIN TANDEM ARM	
6	800-073C	GREASE ZERK 1/4-28 X 90-DEG	
7	800-080C	GREASE ZERK 1/4-28 THD FORMING	
8	802-082C	HHCS 1/2-13X1 3/4 GR5 FTHD	
9	802-099C	HHCS 1/2-13X3 1/4 GR5	
10	802-143C	HHCS 3/8-16X2 GR5	
11	802-779C	HUB STUD 1/2-20X1.88 GR5	
12	803-013C	NUT LOCK 3/8-16 PLT	
13	803-019C	NUT LOCK 1/2-13 PLT	
14	803-053C	NUT HEX SLOTTED 3/4-16	
15	803-169C	NUT HEX FLG LOCK 1/2-13 PLT	
16	803-310C	NUT HEX 1/2-20 X 5/8 HIGH	
17	803-381C	NUT HEX JAM SLOTTED 1 1/4-7	
18	804-016C	WASHER FLAT 1/2 SAE PLT	
19	804-088C	WASHER FLAT #8 SAE PLT	
19	804-216C	RPBY 804-008C	Obsolete
20	805-058C	PIN COTTER 3/16 X 2	
21	805-246C	PIN COTTER 5/32 X 1 3/4 LG	
22	805-292C	PIN 1.0X4.42 USBL HRD PLT	
23	815-241C	SPINDLE-SINGLE BOLT-ON	
24	815-243C	HUB 5-BOLT W/CUPS/STUDS	
25	815-244C	HUB 5-BOLT COMPLETE	
26	816-497C	SEAL 1.75ID CR17617	
27	822-020C	BRG CUP LM-67010	
28	822-021C	BRG CONE 1.25ID LM-67048	
29	822-033C	BRG CUP LM-48510	
30	822-034C	BRG CONE LM-48548	
31	890-005C	BUSHING CYL 1 1/4 X 1 X 1	
32	890-970C	BUSHING 1.25ODX1.00IDX2.87	
33	891-177C	BHG 1.50ODX1.25X1.38	

Axle Tandem Wing Deck S/N 792272+

Applies to Models: RCBM6615 S/N 944729-, RCB6615 S/N 944729-

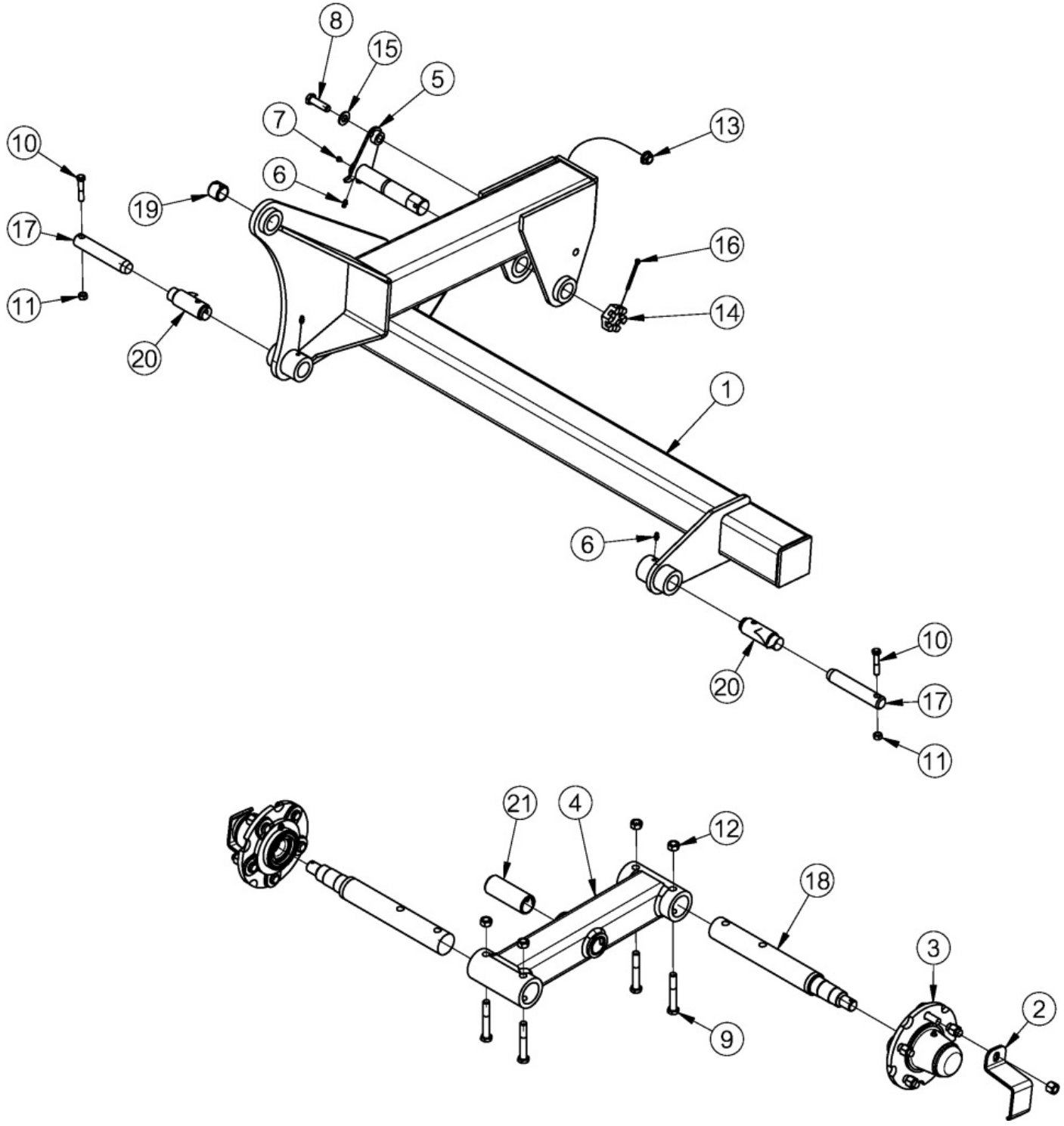

Axle Tandem Wing Deck S/N 792272+

Applies to Models: RCBM6615 S/N 944729-, RCB6615 S/N 944729-

Ref.	Part No.	Part Description	Comments
	DWG35220	Drawing Image Number	
1	330-293H	AXLE RH TANDEM	
1	330-298H	AXLE LH TANDEM	
2	330-331D	PROTECTOR DUST CAP	
3	330-938K	HUB 5 BOLT COMPLETE	
4	331-202H	TANDEM ARM, SHORT	
5	334-465H	WALKING TANDEM PIVOT PIN	
6	800-001C	GREASE ZERK STRAIGHT 1/4-28	
7	801-229C	SCREW SLOTTED HEX 1/4-28X3/16	
8	802-082C	HHCS 1/2-13X1 3/4 GR5 FTHD	
9	802-099C	HHCS 1/2-13X3 1/4 GR5	
10	802-143C	HHCS 3/8-16X2 GR5	
11	803-013C	NUT LOCK 3/8-16 PLT	
12	803-019C	NUT LOCK 1/2-13 PLT	
13	803-169C	NUT HEX FLG LOCK 1/2-13 PLT	
14	803-381C	NUT HEX JAM SLOTTED 1 1/4-7	
15	804-016C	WASHER FLAT 1/2 SAE PLT	
16	805-058C	PIN COTTER 3/16 X 2	
17	805-292C	PIN 1.0X4.42 USBL HRD PLT	
18	815-433C	SPINDLE, SINGLE BOLT-ON 7/8-14	
19	890-005C	BUSHING CYL 1 1/4 X 1 X 1	
20	890-970C	BUSHING 1.25ODX1.00IDX2.87	
21	891-999C	BUSHING 1.50ODX1.25X3.93	S/N 1538169+
21	891-177C	BHG 1.50ODX1.25X1.38	S/N 1538168-

Guards Chain Double Row Front

Applies to Models: RCBM6615 S/N 944729-, RCB6615 S/N 944729-

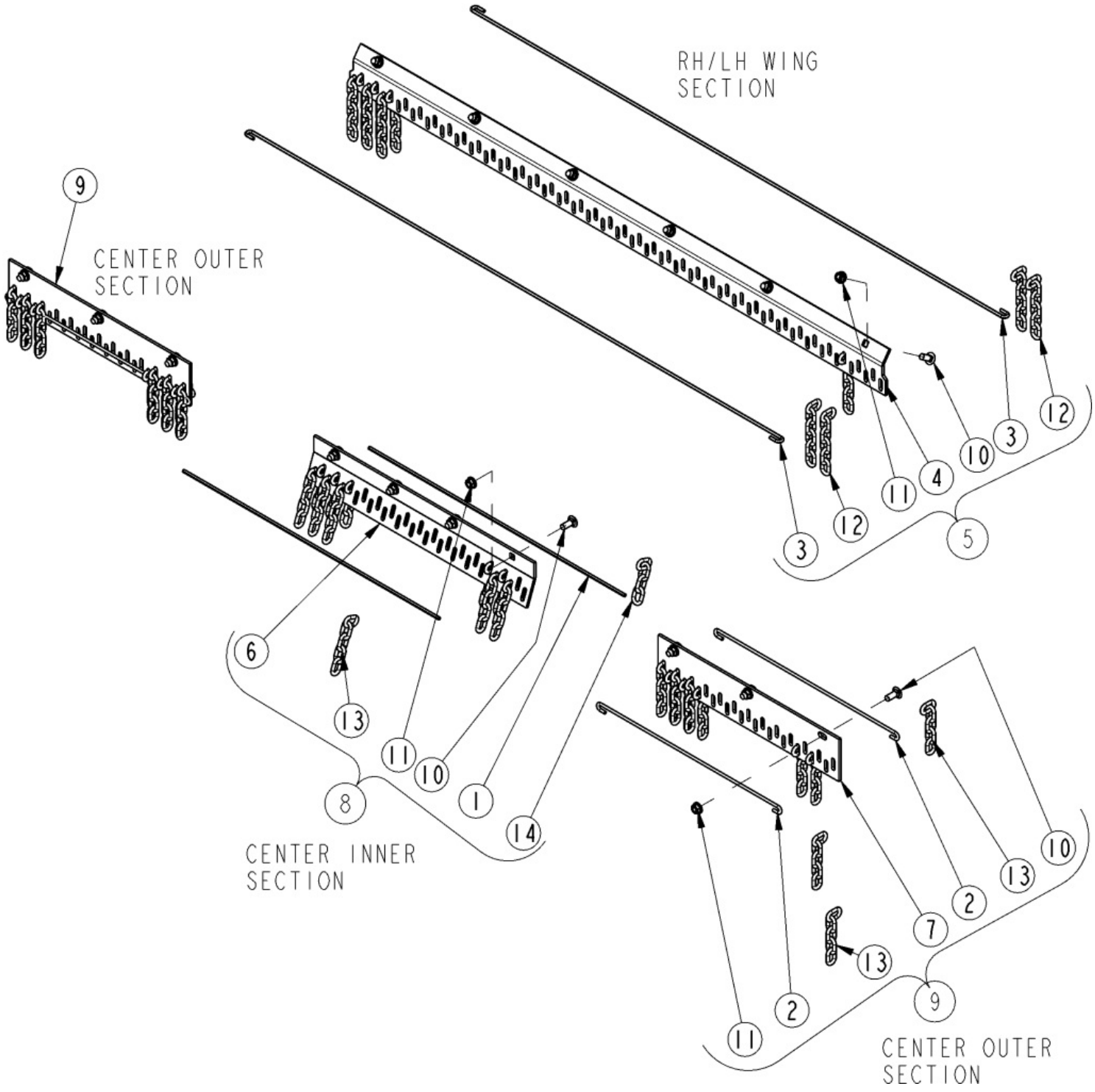

Guards Chain Double Row Front

Applies to Models: RCBM6615 S/N 944729-, RCB6615 S/N 944729-

Ref.	Part No.	Part Description	Comments
	DWG26545	Drawing Image Number	
	330-280A	CHAINGUARD DOUBLE FRONT *	
1	326-099D	ROUND ROD 1/4 X 32	
1	318-107D	RPBY 326-099D	Obsolete
2	318-337D	ROUND ROD 1/4 X 25	
3	318-617D	ROUND ROD .25 X 68.50	
4	318-636D	CHAINGUARD, DBL FR WING	
5	318-707K	CHAINGUARD, DBL FRT WING	
6	318-932D	CHAINGUARD DBL FRT CTR INNER	
7	318-966D	CHNGRD, DBL FRT CTR OUTER	
8	330-238K	CHNGRD DBL FRT CTR INNER	
9	330-274K	CHNGRD DBL FRT CTR OUTER	
10	802-214C	RHSNB 1/2-13X1 1/4 GR5	
11	803-037C	NUT HEX WHIZ 1/2-13 PLT GR5	
12	890-175C	CHAIN 5/16 GR 43 X 6 LINKS PLT	
13	890-341C	CHAIN WELD 5/16 GR 43 X 5 LINK	
14	890-400C	CHAIN WELD 5/16 GR 43 X 4 LINK	

Guards Chain Double Row Rear

Applies to Models: RCBM6615 S/N 944729-, RCB6615 S/N 944729-

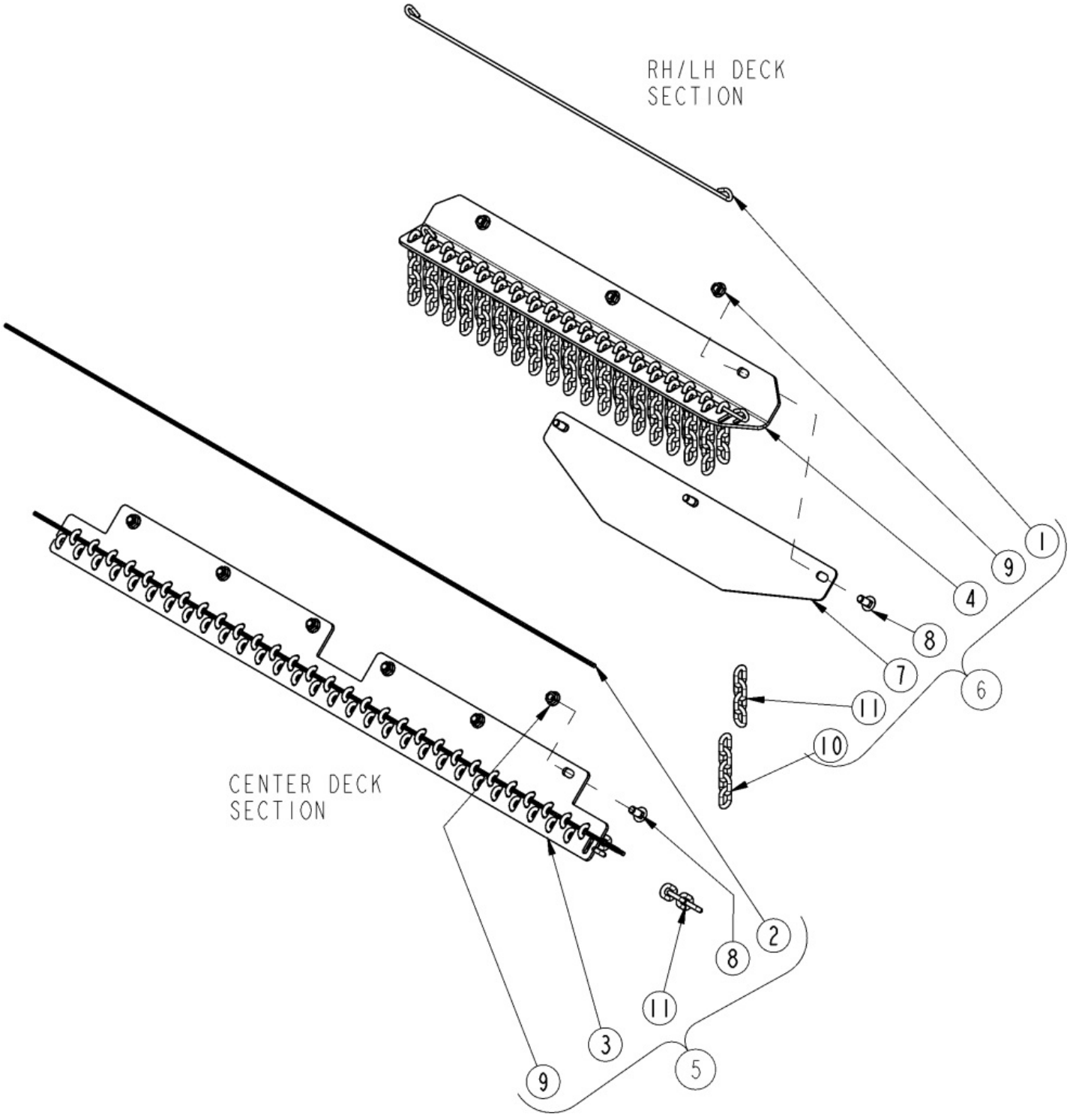

Guards Chain Double Row Rear

Applies to Models: RCBM6615 S/N 944729-, RCB6615 S/N 944729-

Ref.	Part No.	Part Description	Comments
	DWG26547	Drawing Image Number	
	330-283A	CHAINGUARD DOUBLE REAR *	
1	326-535D	ROUND ROD 1/4 X 37 3/4	
1	318-108D	RPBY 326-535D	Obsolete
2	318-478D	ROUND ROD .25 X 59	
3	318-930D	CHAINGUARD DBL REAR CTR	
4	318-968D	CHNGRD DBL REAR WING LH	Shown
4	330-051D	CHNGRD DBL REAR WING RH	
5	330-235K	CHNGRD DBL REAR CTR	
6	330-277K	CHNGRD DBL REAR WING LH	Shown
6	330-450K	CHNGRD DBL REAR WING RH	
7	330-597D	CHAIN REV. DEFLECTOR REAR WING	S/N 748617+
8	802-214C	RHSNB 1/2-13X1 1/4 GR5	
9	803-037C	NUT HEX WHIZ 1/2-13 PLT GR5	
10	890-341C	CHAIN WELD 5/16 GR 43 X 5 LINK	
11	890-400C	CHAIN WELD 5/16 GR 43 X 4 LINK	

Guards Chain Single Row Front

Applies to Models: RCBM6615 S/N 944729-, RCB6615 S/N 944729-

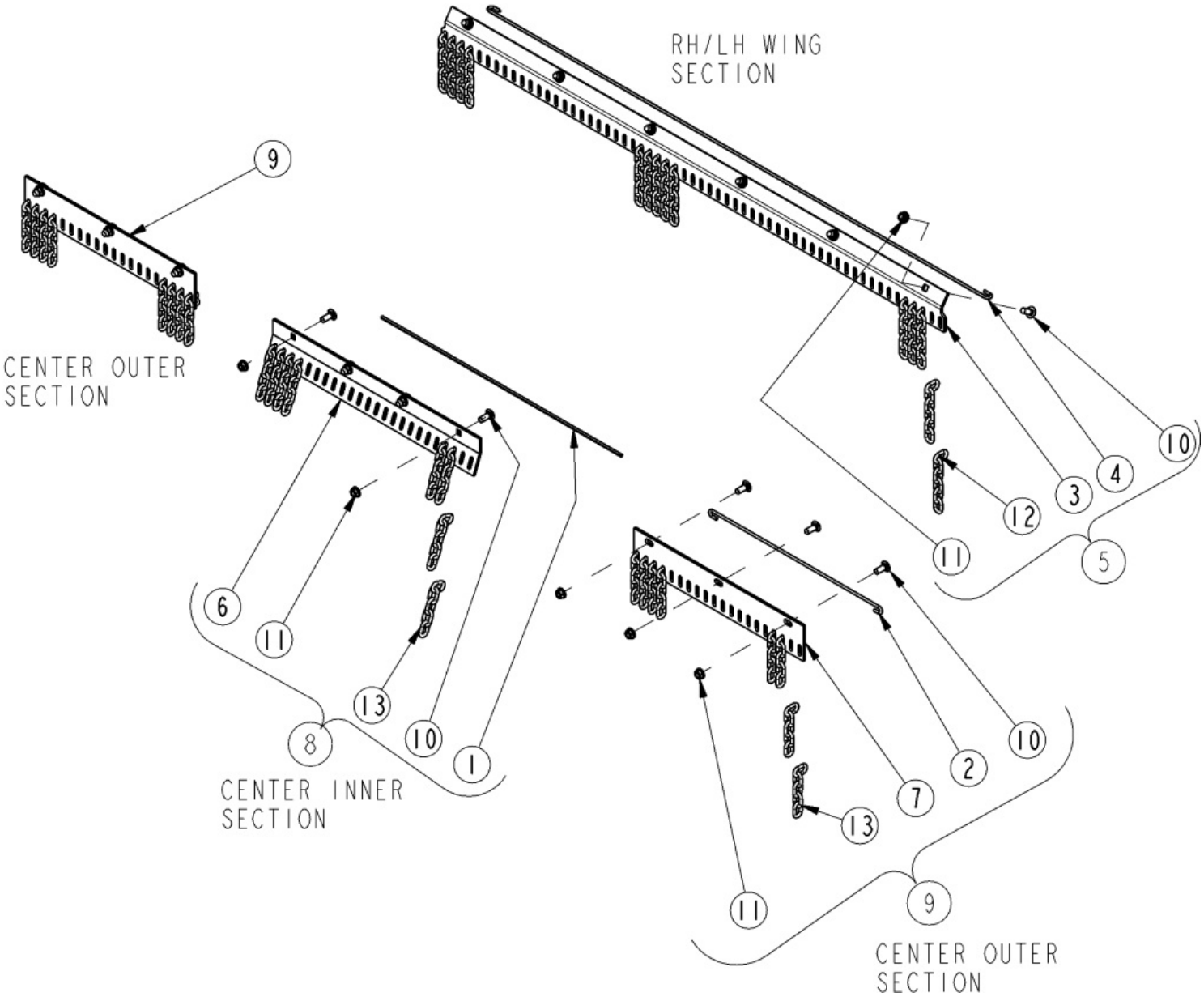

Guards Chain Single Row Front

Applies to Models: RCBM6615 S/N 944729-, RCB6615 S/N 944729-

Ref.	Part No.	Part Description	Comments
	DWG26543	Drawing Image Number	
	330-279A	CHAINGUARD SINGLE FRONT *	
1	326-099D	ROUND ROD 1/4 X 32	
1	318-107D	RPBY 326-099D	Obsolete
2	318-337D	ROUND ROD 1/4 X 25	
3	318-606D	CHAINGUARD, SGL FR WING	
4	318-617D	ROUND ROD .25 X 68.50	
5	318-620K	CHAINGUARD, SGL FRT WING	
6	318-931D	CHAINGUARD SGL FRT CTR INNER	
7	318-965D	CHNGRD, SGL FRT CTR OUTER	
8	330-237K	CHNGRD SGL FRT CTR INNER	
9	330-273K	CHNGRD SGL FRT CTR OUTER	
10	802-214C	RHSNB 1/2-13X1 1/4 GR5	
11	803-037C	NUT HEX WHIZ 1/2-13 PLT GR5	
12	890-175C	CHAIN 5/16 GR 43 X 6 LINKS PLT	
13	890-341C	CHAIN WELD 5/16 GR 43 X 5 LINK	

Guards Chain Single Row Rear

Applies to Models: RCBM6615 S/N 944729-, RCB6615 S/N 944729-

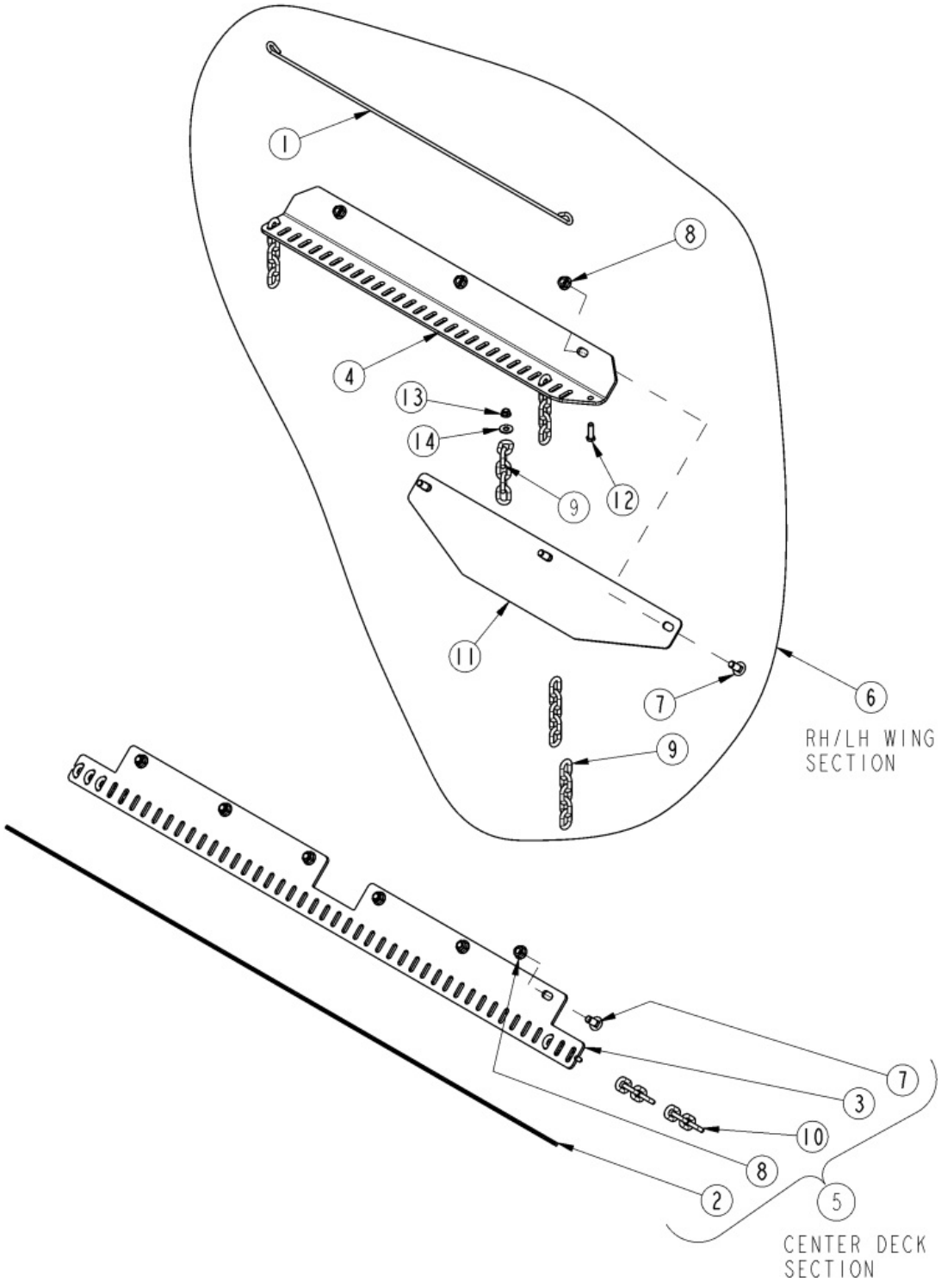

Guards Chain Single Row Rear

Applies to Models: RCBM6615 S/N 944729-, RCB6615 S/N 944729-

Ref.	Part No.	Part Description	Comments
	DWG 26544	Drawing Image Number	
	330-282A	CHAINGUARD SINGLE REAR *	
1	326-535D	ROUND ROD 1/4 X 37 3/4	
1	318-108D	RPBY 326-535D	Obsolete
2	318-478D	ROUND ROD .25 X 59	
3	318-929D	CHAINGUARD SGL REAR CTR	
4	318-967D	CHNGRD SGL REAR WING LH	Shown
4	330-050D	CHNGRD SGL REAR WING RH	
5	330-234K	CHNGRD SGL REAR CTR	
6	330-276K	CHNGRD SGL REAR WING LH	Shown
6	330-449K	CHNGRD SGL REAR WING RH	
7	802-214C	RHSNB 1/2-13X1 1/4 GR5	
8	803-037C	NUT HEX WHIZ 1/2-13 PLT GR5	
9	890-341C	CHAIN WELD 5/16 GR 43 X 5 LINK	
10	890-400C	CHAIN WELD 5/16 GR 43 X 4 LINK	
11	330-597D	CHAIN REV. DEFLECTOR REAR WING	S/N 748617+
12	802-079C	HHCS 3/8-16X1 1/4 GR5	
13	803-209C	NUT FLANGE LOCK 3/8-16 PLT	
14	804-011C	WASHER FLAT 3/8 USS PLT	

Guards Chain W/ Cable Front

Applies to Models: RCBM6615 S/N 944729-, RCB6615 S/N 944729-

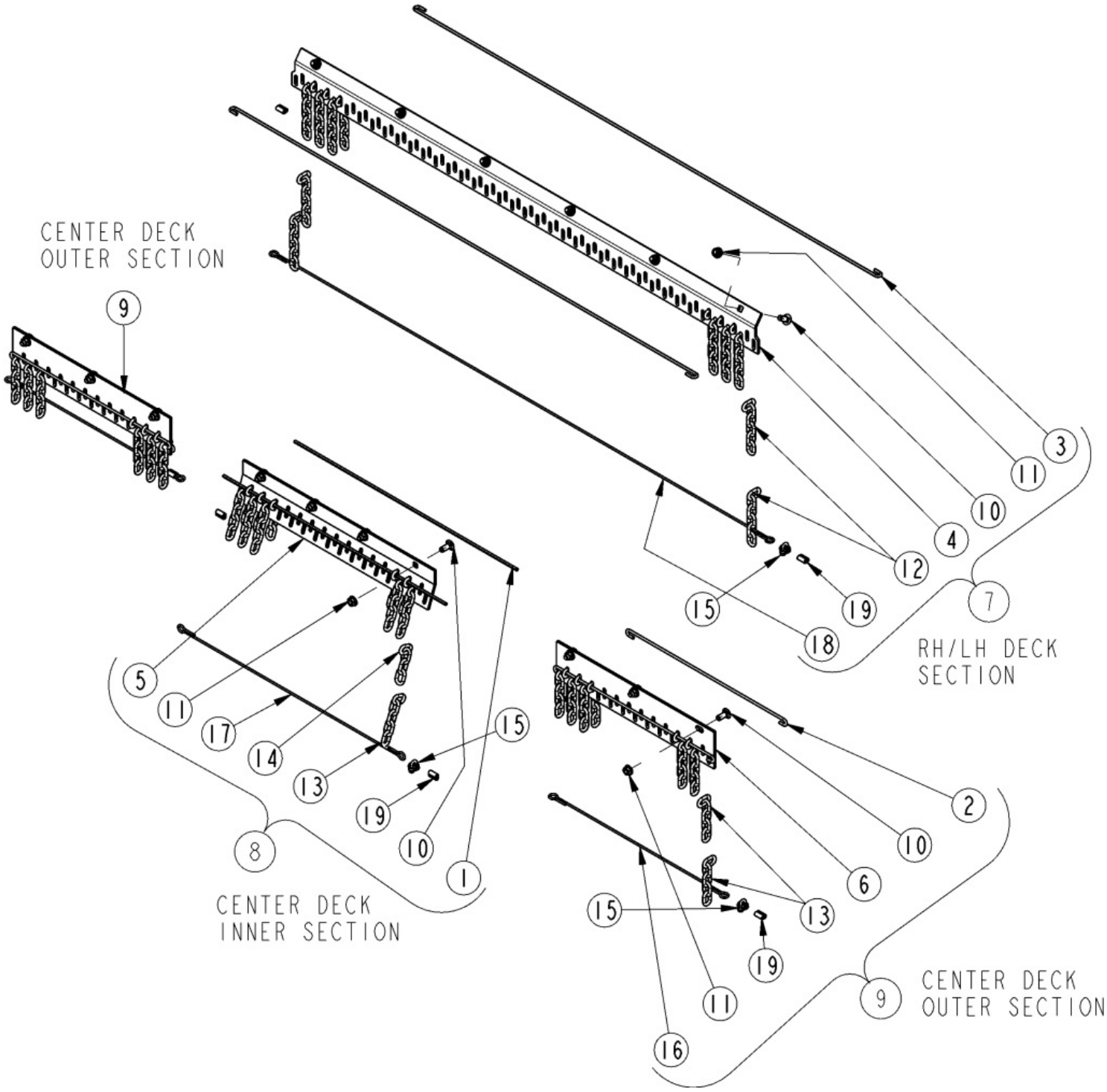

Guards Chain W/ Cable Front

Applies to Models: RCBM6615 S/N 944729-, RCB6615 S/N 944729-

Ref.	Part No.	Part Description	Comments
	DWG26548	Drawing Image Number	
	330-281A	CHAINGUARD CABLE FRONT *	
1	326-099D	ROUND ROD 1/4 X 32	
1	318-107D	RPBY 326-099D	Obsolete
2	318-337D	ROUND ROD 1/4 X 25	
3	318-617D	ROUND ROD .25 X 68.50	
4	318-636D	CHAINGUARD, DBL FR WING	
5	318-932D	CHAINGUARD DBL FRT CTR INNER	
6	318-966D	CHNGRD, DBL FRT CTR OUTER	
7	330-155K	CHAINGUARD, FRT CBL WING	
8	330-239K	CHNGRD CBL FRT CTR INNER	
9	330-275K	CHNGRD CBL FRT CTR OUTER	
10	802-214C	RHSNB 1/2-13X1 1/4 GR5	
11	803-037C	NUT HEX WHIZ 1/2-13 PLT GR5	
12	890-175C	CHAIN 5/16 GR 43 X 6 LINKS PLT	
13	890-341C	CHAIN WELD 5/16 GR 43 X 5 LINK	
14	890-400C	CHAIN WELD 5/16 GR 43 X 4 LINK	
15	890-672C	U-BOLT WIRE ROPE CLP 3/16 GAL.	S/N 670327-
16	990-208R	AIRCRAFT CBL.3/16 7X7 GALV.	5' Required
17	990-208R	AIRCRAFT CBL.3/16 7X7 GALV.	6' Required
18	990-208R	AIRCRAFT CBL.3/16 7X7 GALV.	2' Required
19	891-236C	SWAGE CLAMP, 3/16 CABLE	S/N 670328+ Or Use 890-672C

Guards Chain W/ Cable Rear

Applies to Models: RCBM6615 S/N 944729-, RCB6615 S/N 944729-

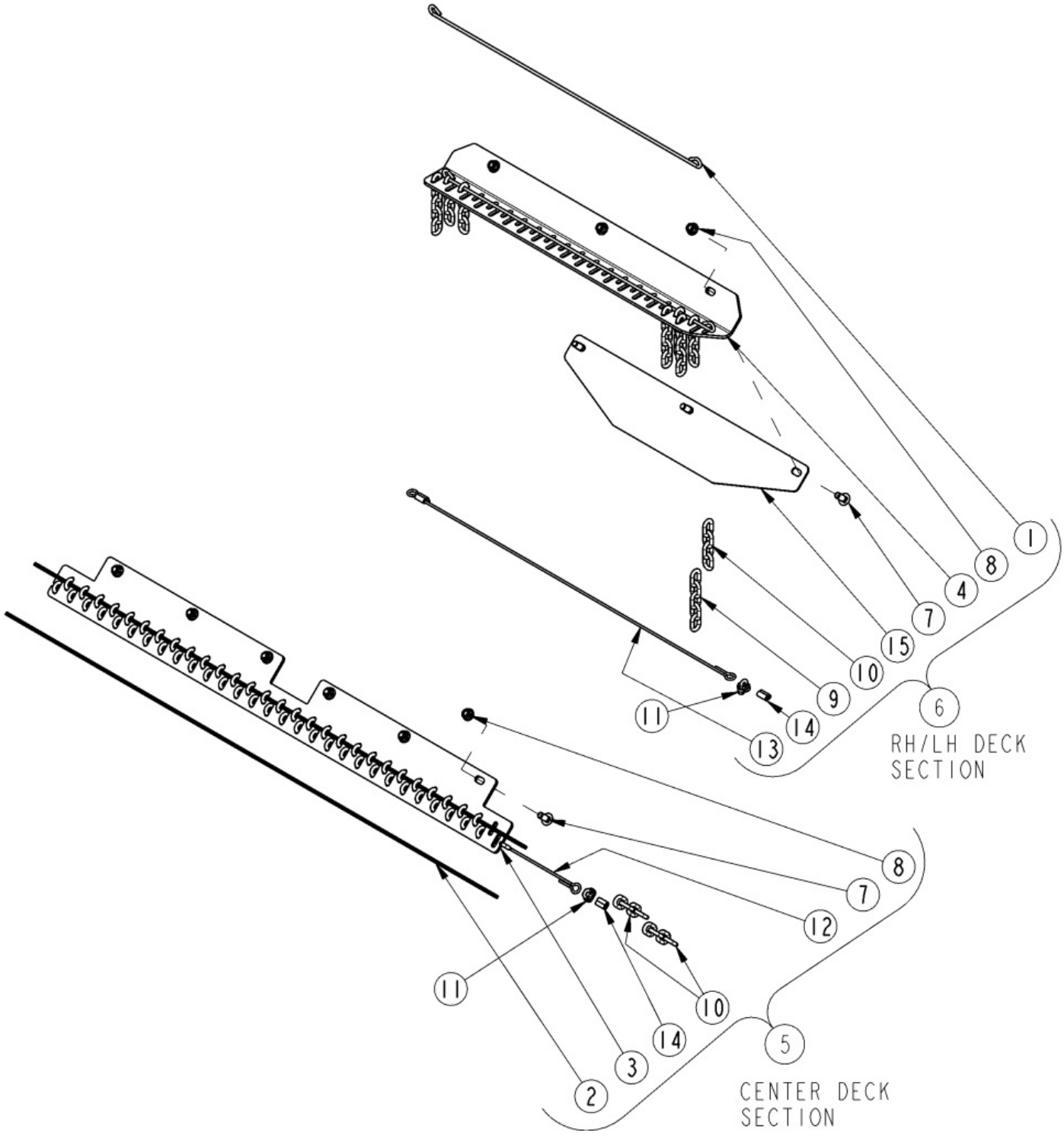

Guards Chain W/ Cable Rear

Applies to Models: RCBM6615 S/N 944729-, RCB6615 S/N 944729-

Ref.	Part No.	Part Description	Comments
	DWG26549	Drawing Image Number	
	330-284A	CHAINGUARD CABLE REAR *	
1	326-535D	ROUND ROD 1/4 X 37 3/4	
1	318-108D	RPBY 326-535D	Obsolete
2	318-478D	ROUND ROD .25 X 59	
3	318-930D	CHAINGUARD DBL REAR CTR	
4	318-968D	CHNGRD DBL REAR WING LH	Shown
4	330-051D	CHNGRD DBL REAR WING RH	
5	330-236K	CHNGRD CBL REAR CTR	
6	330-278K	CHNGRD CBL REAR WING LH	Shown
6	330-451K	CHNGRD CBL REAR WING RH	
7	802-214C	RHSNB 1/2-13X1 1/4 GR5	
8	803-037C	NUT HEX WHIZ 1/2-13 PLT GR5	
9	890-341C	CHAIN WELD 5/16 GR 43 X 5 LINK	
10	890-400C	CHAIN WELD 5/16 GR 43 X 4 LINK	
11	890-672C	U-BOLT WIRE ROPE CLP 3/16 GAL.	S/N 670327-
12	990-208R	AIRCRAFT CBL.3/16 7X7 GALV.	9' Required
13	990-208R	AIRCRAFT CBL.3/16 7X7 GALV.	6' Required
14	891-236C	SWAGE CLAMP, 3/16 CABLE	S/N 670328+ Or Use 890-672C
15	330-597D	CHAIN REV. DEFLECTOR REAR WING	S/N 748617+

Guards Rubber Front

Applies to Models: RCBM6615 S/N 944729-, RCB6615 S/N 944729-

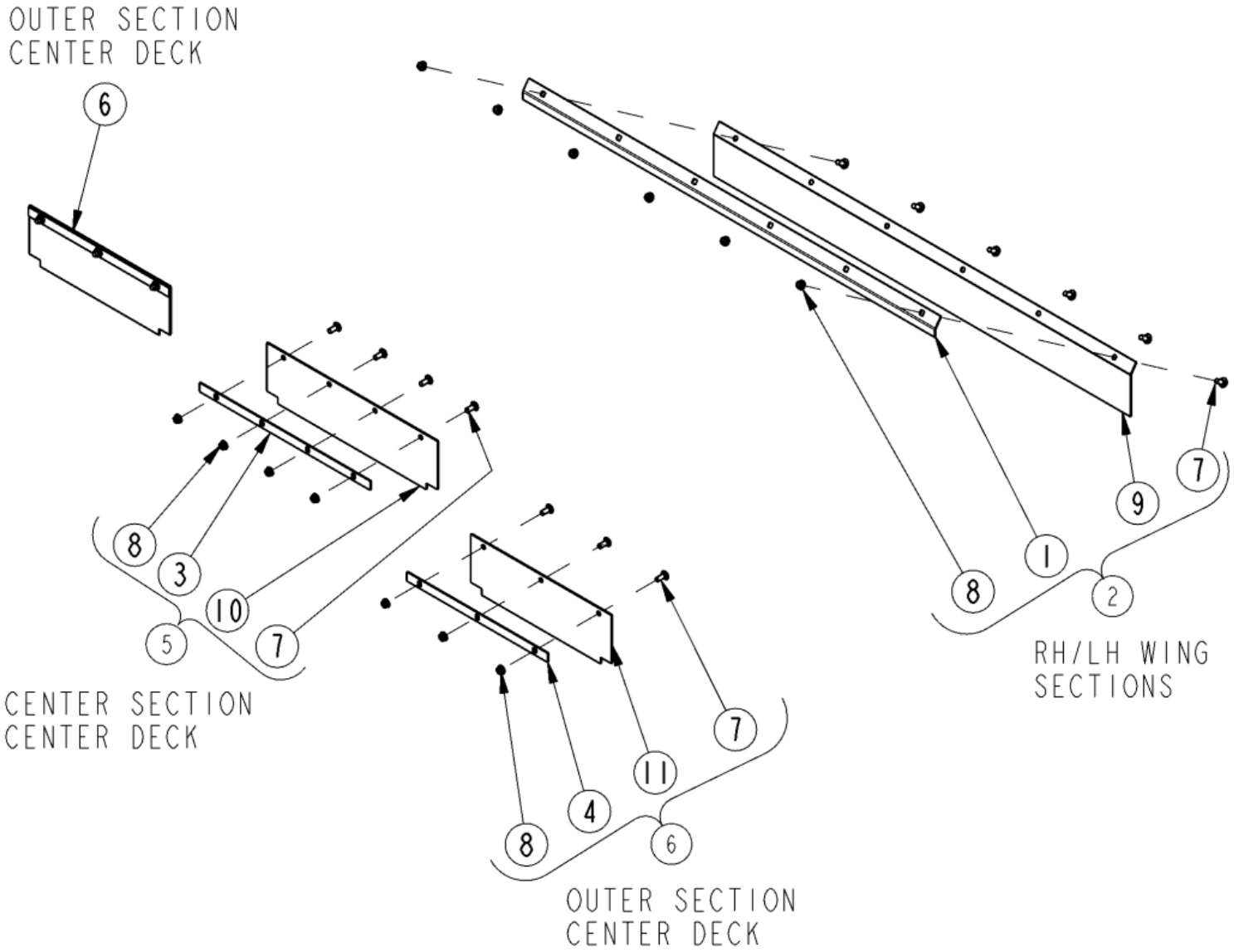

Guards Rubber Front

Applies to Models: RCBM6615 S/N 944729-, RCB6615 S/N 944729-

Ref.	Part No.	Part Description	Comments
	DWG26541	Drawing Image Number	
	330-314A	RUBBERGUARD FRONT *	
1	318-657D	FORMED SUPPORT BAND	
2	318-728K	RUBBERGUARD, FRT WING	
3	318-917D	FLAT SUPPORT BAND	
4	318-918D	FLAT SUPPORT BAND	
5	330-316K	RUBBERGUARD FRT CNTR INNER	
6	330-317K	RUBBERGUARD FRT CNTR OUTER	
7	802-214C	RHSNB 1/2-13X1 1/4 GR5	
8	803-037C	NUT HEX WHIZ 1/2-13 PLT GR5	
9	816-456C	FRONT WING RUBBER GUARD	
10	816-606C	RUBBER GUARD FRT CNTR	
11	816-607C	RUBBER GUARD FRT CNTR OUT	

Guards Rubber Rear

Applies to Models: RCBM6615 S/N 944729-, RCB6615 S/N 944729-

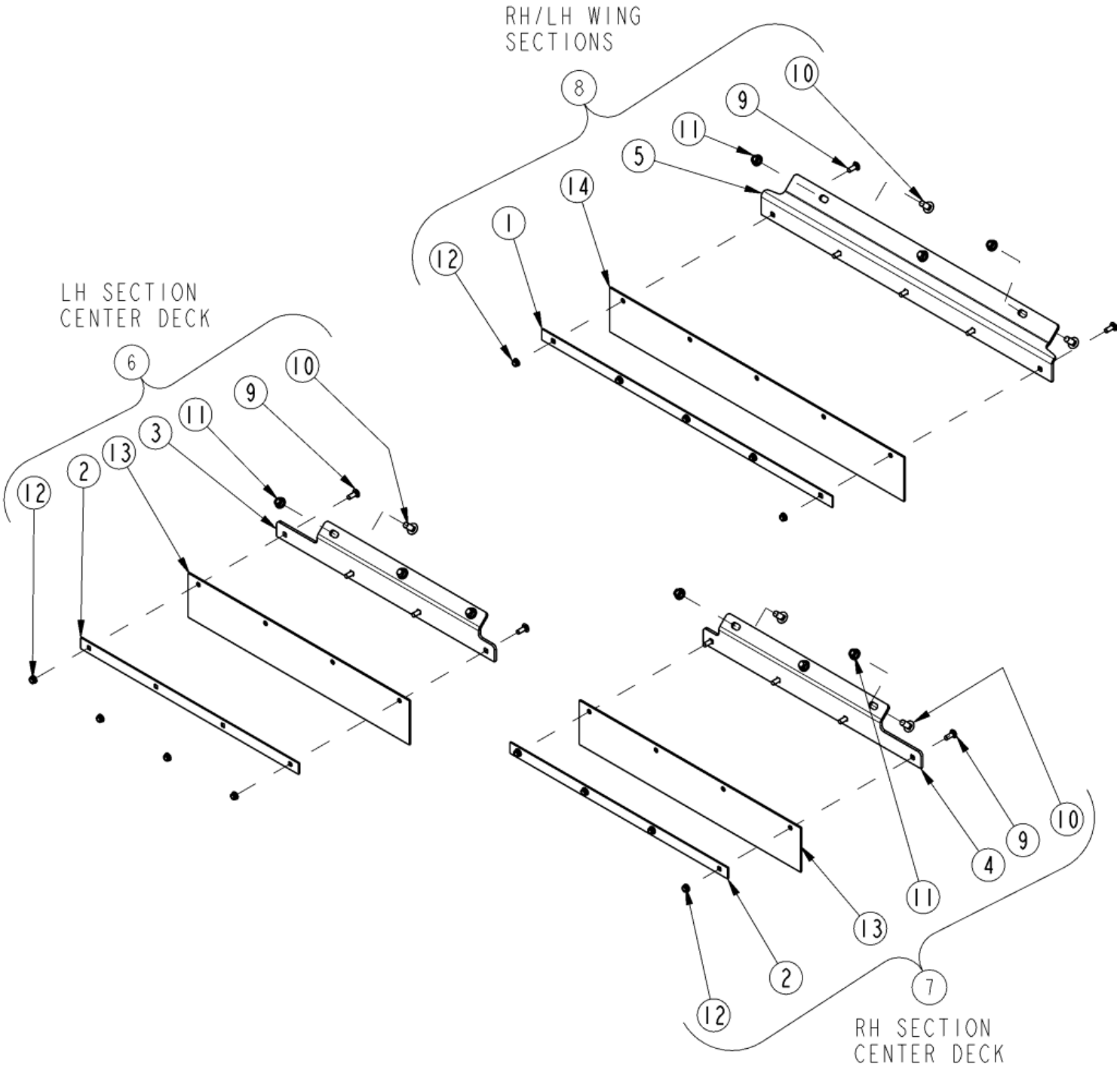

Guards Rubber Rear

Applies to Models: RCBM6615 S/N 944729-, RCB6615 S/N 944729-

Ref.	Part No.	Part Description	Comments
	DWG26542	Drawing Image Number	
	330-315A	RUBBERGUARD REAR	
		*	
1	318-000D	FLAT SUPPORT BAND	
2	318-129D	RUBBER GUARD FLAT BRKT. 28 1/2	
3	318-924D	MOUNT RBBRGRD CNTR LH	
4	318-925D	MOUNT RBBRGRD CNTR RH	
5	318-952D	MOUNT RBBRGRD WING REAR	
6	330-318K	RUBBERGUARD REAR CNTR LH	
7	330-319K	RUBBERGUARD REAR CNTR RH	
8	330-320K	RUBBERGUARD REAR WING	
9	802-015C	RHSNB 3/8-16X1 GR5	
10	802-214C	RHSNB 1/2-13X1 1/4 GR5	
11	803-037C	NUT HEX WHIZ 1/2-13 PLT GR5	
12	803-198C	NUT HEX WHIZ 3/8-16 PLT	
13	816-246C	RUBBER GUARD REAR WING	
14	816-608C	RUBBERGUARD REAR	

Driveline (826-112C) Walterscheid

Applies to Models: RCB6615 S/N 944729-

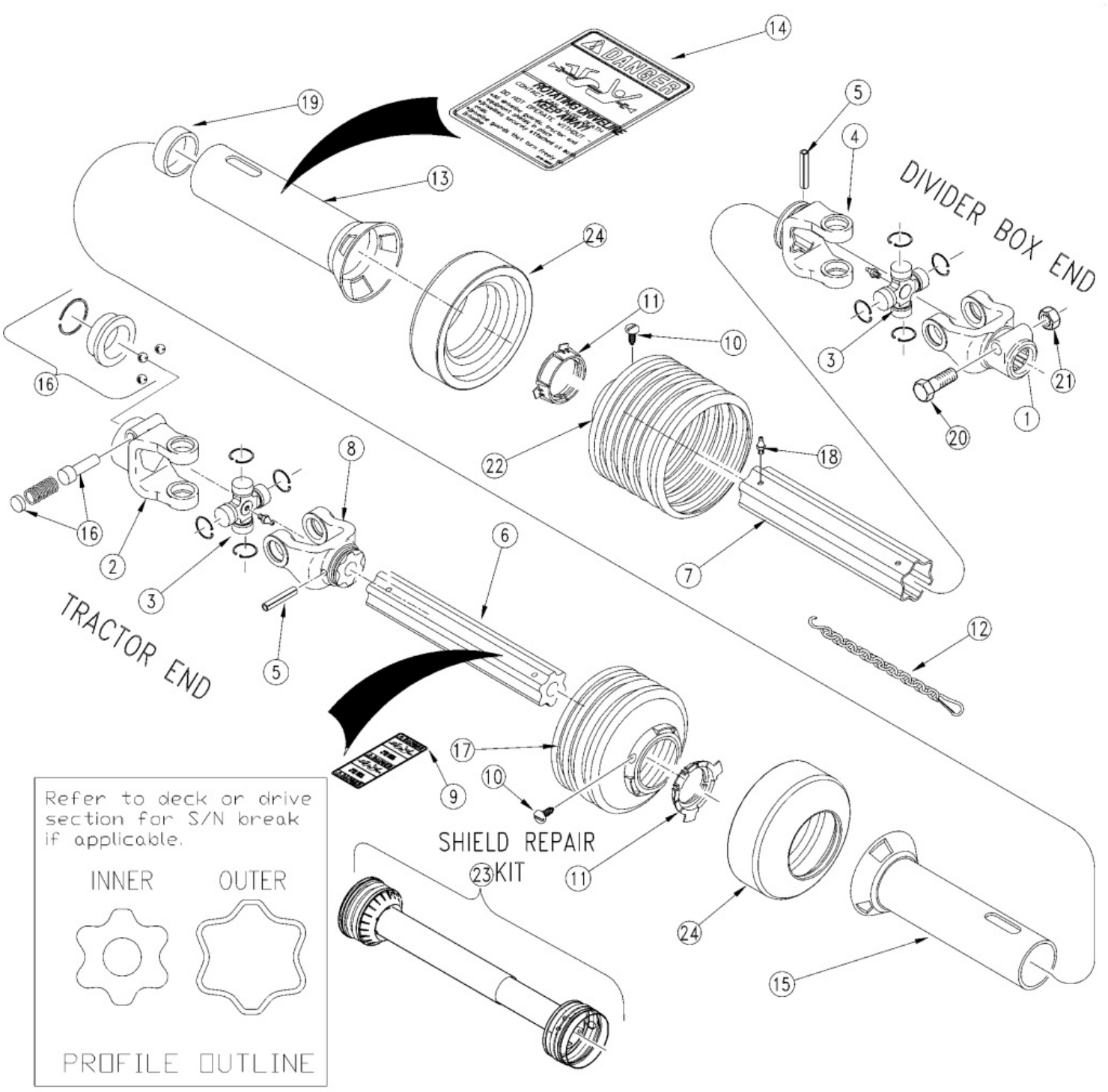

Driveline (826-112C) Walterscheid

Applies to Models: RCB6615 S/N 944729-

Ref.	Part No.	Part Description	Comments
	DWG 18548	Drawing Image Number	
	826-112C	DRVLN C5 40 1.38-6 QD *	
1	325027	WS YOKE 1 3/4-20 SPL.I.C. 2500	
2	362428	WS YOKE 1 3/8"-6 SPL. ASG	
3	312209	WS CROSS & BRG KIT 2500	
4	097140	WS INBOARD YOKE S5	
5	304046	WS SPRING PIN 10 X 90	
6	321256	WS IN PROF 2400 (699713) 860MM	
7	390257	WS PROF&SLV W.A. 845MM	
8	097133	WS INBOARD YOKE S4	
9	818-540C	DECAL DANGER GUARD MISS PTO	
10	365305	WS SCREW	
11	087276	WS BRG RING - SC25	
12	044321	DRIVELINE SHIELD SAFETY CHAIN	(S/N 928934-)
13	389850	WS OUT SHLD RND (391409) 770MM	
14	818-552C	DECAL DANGER PTO DRIVELINE	
15	388957	RPBY 371918	Obsolete
16	364915	WS ASSY COLLAR KIT	S/N _____+
16	339107	WS Q.D. PIN KIT	S/N _____-
17	377437	WS SHIELD CONE 7 RIB	
18	380371	WS ZERK	
19	355155	WS SUPPORT BRG	
20	702352	WS HEX BOLT M16 X 90 GR 8.8	
21	304011	WS LOCK NUT M16	
22	377442	WS SHIELD CONE - 12 RIB	
23	826-587C	SHIELD KIT, 826-112C	
24	359474	WS REINFORCING COLLAR	

Driveline (826-247C) Walterscheid

Applies to Models: RCBM6615 S/N 944729-

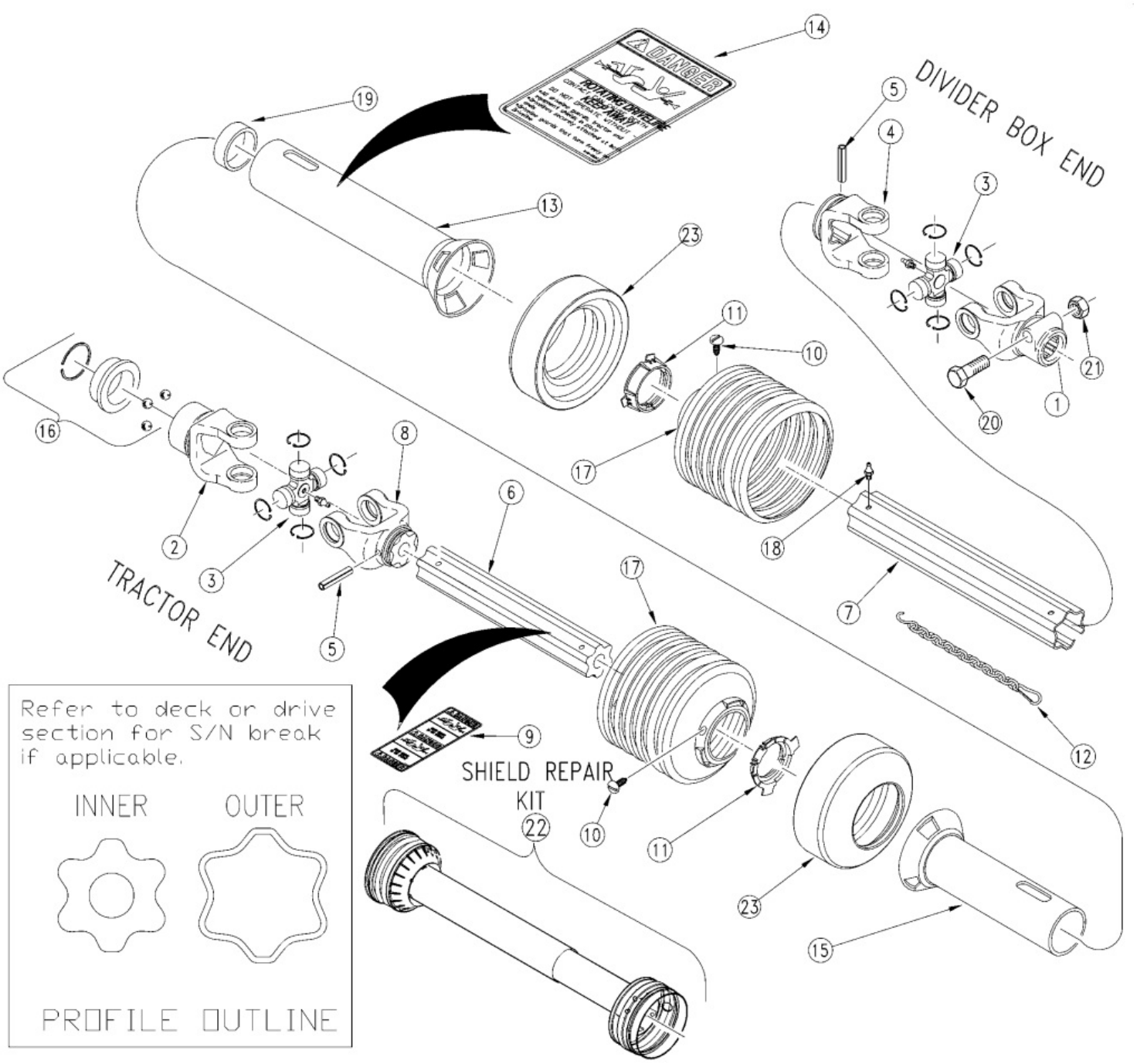

Driveline (826-247C) Walterscheid

Applies to Models: RCBM6615 S/N 944729-

Ref.	Part No.	Part Description	Comments
	DWG 18549	Drawing Image Number	
	826-247C	DRVLN C5 44 1.38-21 QD *	
1	325027	WS YOKE 1 3/4-20 SPL.I.C. 2500	
2	362430	WS YOKE 1 3/8-21 SPL. AS	
3	312209	WS CROSS & BRG KIT 2500	
4	097140	WS INBOARD YOKE S5	
5	304046	WS SPRING PIN 10 X 90	
6	333645	RPBY 699713	
7	387768	WS PROFILE & SLEEVE W.A.	
8	097133	WS INBOARD YOKE S4	
9	818-540C	DECAL DANGER GUARD MISS PTO	
10	365305	WS SCREW	
11	087276	WS BRG RING - SC25	
12	044321	DRIVELINE SHIELD SAFETY CHAIN	(S/N 928934-)
13	391409	WS OUTER SHIELD TUBE OVAL	
14	818-552C	DECAL DANGER PTO DRIVELINE	
15	391410	WS INNER SHIELD TUBE RND.	
16	364915	WS ASSY COLLAR KIT	
17	377437	WS SHIELD CONE 7 RIB	
18	380371	WS ZERK	
19	355155	WS SUPPORT BRG	
20	702352	WS HEX BOLT M16 X 90 GR 8.8	
21	304011	WS LOCK NUT M16	
22	826-603C	SHIELD KIT, 826-247C	
23	359474	WS REINFORCING COLLAR	

Driveline (826-643C) Weasler

Applies to Models: RCB6615 S/N 944729-

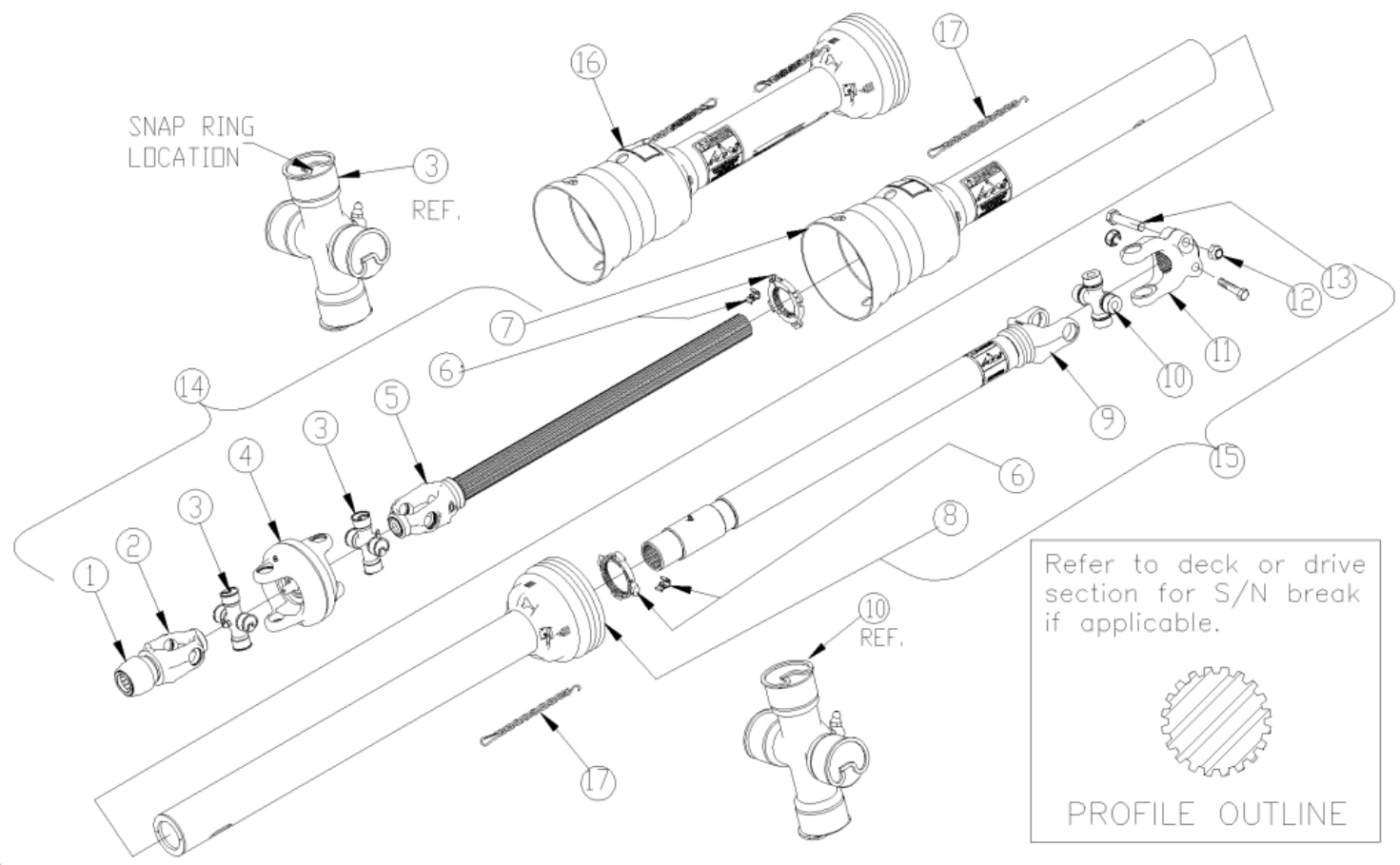

Driveline (826-643C) Weasler

Applies to Models: RCB6615 S/N 944729-

Ref.	Part No.	Part Description	Comments
	DWG 30185	Image No.	
	826-643C	DRVLN C6 42 1.38-6 CV	
		*	
1	26-15120	WE SSL/AUTO-LOK REPAIR KIT	
2	68810-1004	WE WWCV AUTO-LOK YOKE ASM	
3	03-15570	WE AB8/AW25EBL CROSS KIT	
4	26-16033	WE WWCV CENTER HOUSING	
5	99-24406	WE YOKE&SHAFT (1.69-20 SPLINE)	
6	19-15135	WE GUARD REPAIR KIT	
7	97-24406	WE OUTER GUARD	
8	96-24406	WE INNER GUARD	
9	98-24406	WE YOKE, TUBE & SLIP SLEEVE	
10	03-15316	WE 55EBL CROSS KIT	
11	55051-1817	WE YOKE	
12	11-14988	WE LOCK NUT .625-11	
13	11-15180	WE BOLT .625-11 X 3.00L GR8	
14	93-24406	WE JOINT&SHFT HALF ASM W/GUARD	
15	92-24406	WE JOINT&TUBE HALF ASM W/GUARD	
16	90-24406	WE GUARD SET	
17	11-80005	WE CHAIN	(S/N 928934-)

Driveline (826-793C) Weasler

Applies to Models: RCBM6615 S/N 944729-

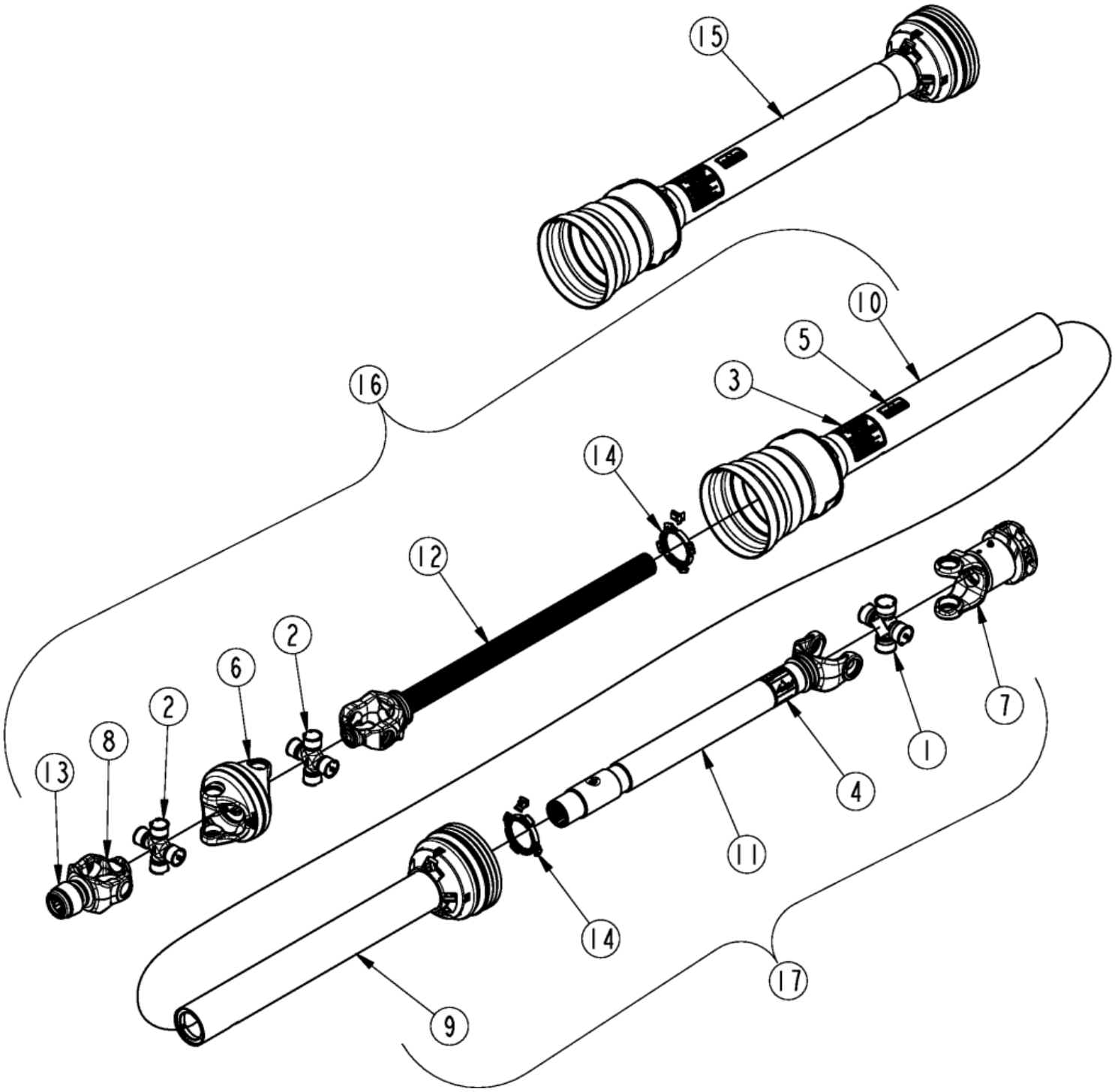

Driveline (826-793C) Weasler

Applies to Models: RCBM6615 S/N 944729-

Ref.	Part No.	Part Description	Comments
	DWG 70947	Image No.	
	826-793C	DRVLN C6 39 1.38-21 CV ORCLTCH *	Complete assembly
1	03-15316	WE 55EBL CROSS KIT	
2	03-15570	WE AB8/AW25EBL CROSS KIT	
3	13-10021	WE SAFETY SIGN	
4	13-10022	WE SAFETY SIGN	
5	13-15249	WE DECAL LAND PRIDE	
6	26-16033	WE WWCV CENTER HOUSING	
7	39-10039	WE OVERRUNNING THRST CLTCH ASM	
8	68810-1003	WE WWCV AUTO-LOK YOKE ASM	
9	96-26654	WE INNER GUARD	
10	97-26654	WE OUTER GUARD	
11	98-26654	WE YOKE, TUBE & SLIP SLEEVE	
12	99-24406	WE YOKE&SHAFT (1.69-20 SPLINE)	
13	26-15120	WE SSL/AUTO-LOK REPAIR KIT	
14	19-15121	WE GRD REPAIR KIT	
15	90-26654	WE GUARD SET	
16	93-25023	WE JOINT&SHFT HALF ASM W/GUARD	
17	94-26654	WE JOINT & TUBE HALF ASM	

Driveline Center (826-478C) Comer

Applies to Models: RCBM6615 S/N 944729-, RCB6615 S/N 944729-

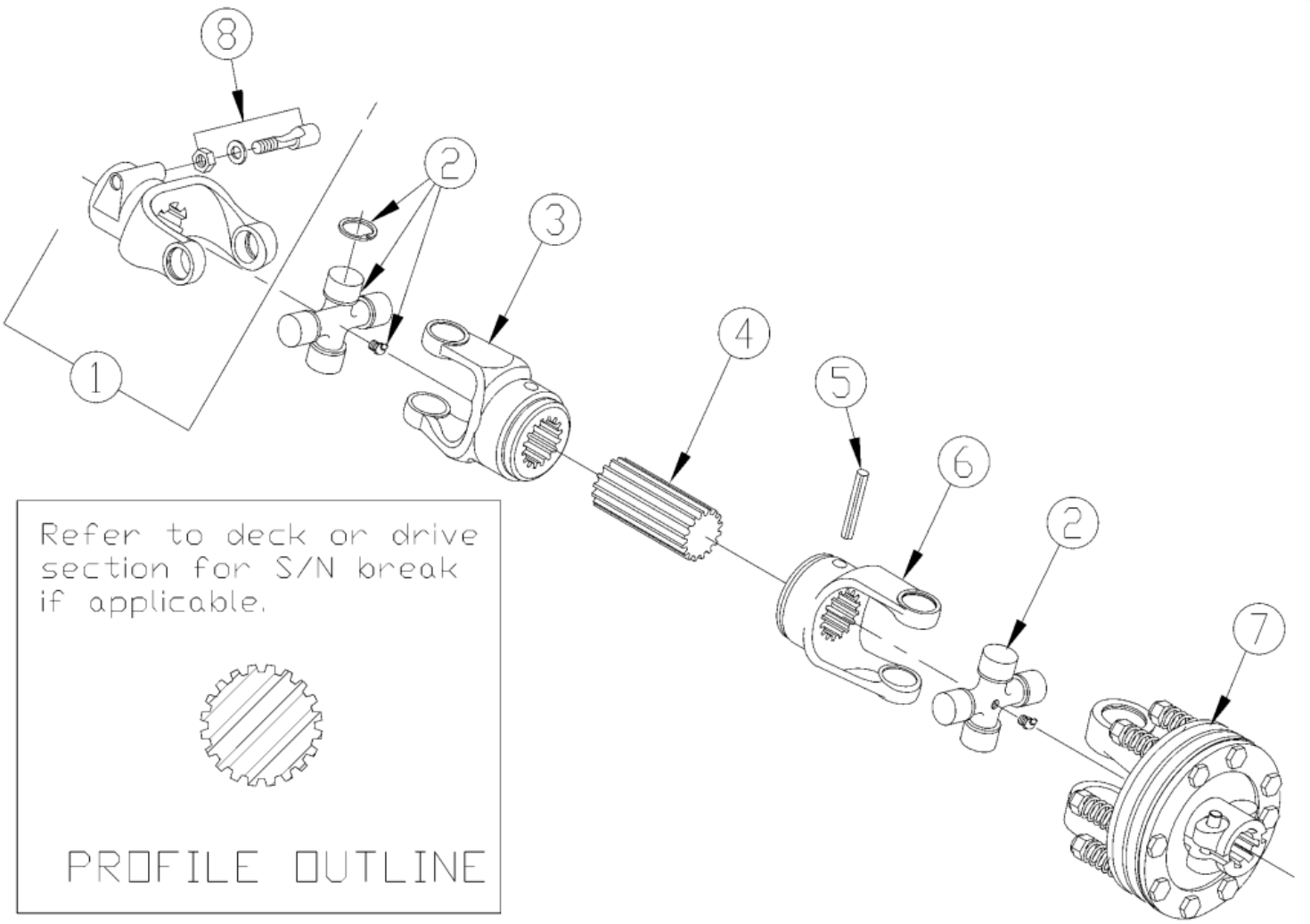

Driveline Center (826-478C) Comer

Applies to Models: RCBM6615 S/N 944729-, RCB6615 S/N 944729-

Ref.	Part No.	Part Description	Comments
	DWG23952	Drawing Image Number	
	826-478C	RPBY 826-818C *	Cat. 5
1	141.026.357.1	COMER YOKE COMPLETE	
2	180.016.130	COMER CROSS ASSEMBLY	
3	170.016.630.1	COMER YOKE, OUTER	
4	155.150.724	COMER SHAFT, SPLINED	
5	190.000.016	COMER ROLL PIN, INNER TUBE	
6	151.016.031.1	COMER INNER YOKE	
7	146.264.024.1	COMER CLUTCH, COMPLETE ASSY	
8	165.000.589	COMER TAPERED PIN SET 1 3/4	

Driveline Center (826-818C) Comer

Applies to Models: RCBM6615 S/N 944729-, RCB6615 S/N 944729-

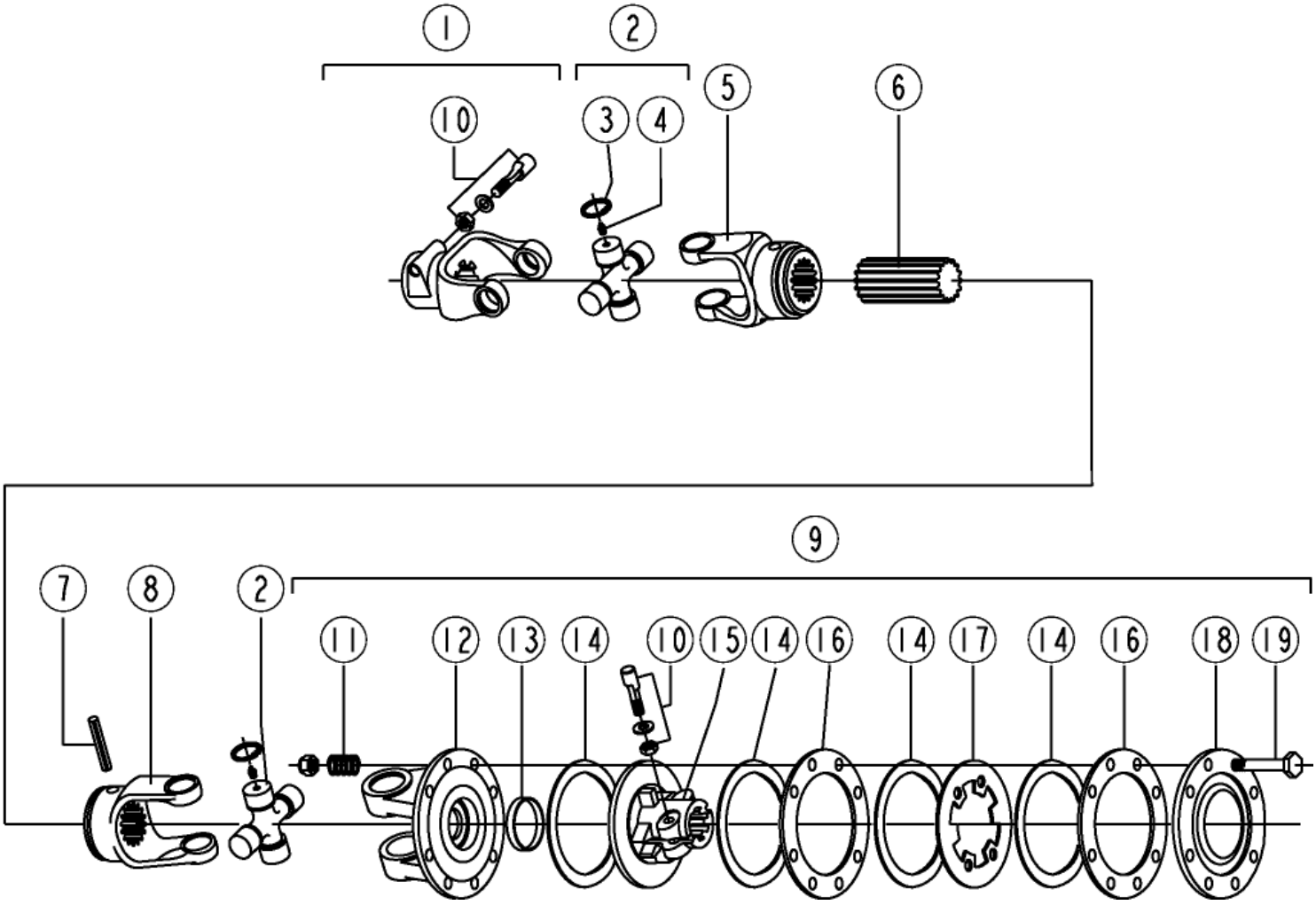

Driveline Center (826-818C) Comer

Applies to Models: RCBM6615 S/N 944729-, RCB6615 S/N 944729-

Ref.	Part No.	Part Description	Comments
	DWG 37510	Image No.	
	826-818C	DRVLN C5 11 1.75-20 FX CLTCH	
1	141.026.357.1	COMER YOKE COMPLETE	
2	180.016.780	CO CROSS JOURNAL SET	
3	190.000.032	CO CIRCLIP	
4	190.000.047	CO GREASE NIPPLE	
5	170.016.630.1	COMER YOKE, OUTER	
6	155.150.724	COMER SHAFT, SPLINED	
7	190.000.016	COMER ROLL PIN, INNER TUBE	
8	151.016.896.1	CO INNER YOKE	
9	146.264.024.1	COMER CLUTCH, COMPLETE ASSY	
10	165.000.589	COMER TAPERED PIN SET 1 3/4	
11	180.014.022	COMER SPRING	
12	151.016.037.1	COMER YOKE, FLANGED	
13	180.019.019	COMER BUSH	
14	180.019.340	COMER LINING RING	
14	180.019.018	RPBY 180.019.340	Obsolete
15	151.018.228.1	COMER CLUTCH SUPPORT	
16	180.019.014	COMER INNER PLATE	
17	180.019.115	COMER INTERMEDIATE PLATE	
18	180.019.116.1	COMER PRESSURE PLATE	
19	165.000.548	COMER BOLT WITH NUT M10X100	

Driveline CV 1.38 1000 RPM (826-644C) Weasler

Applies to Models: RCBM6615 S/N 944729-

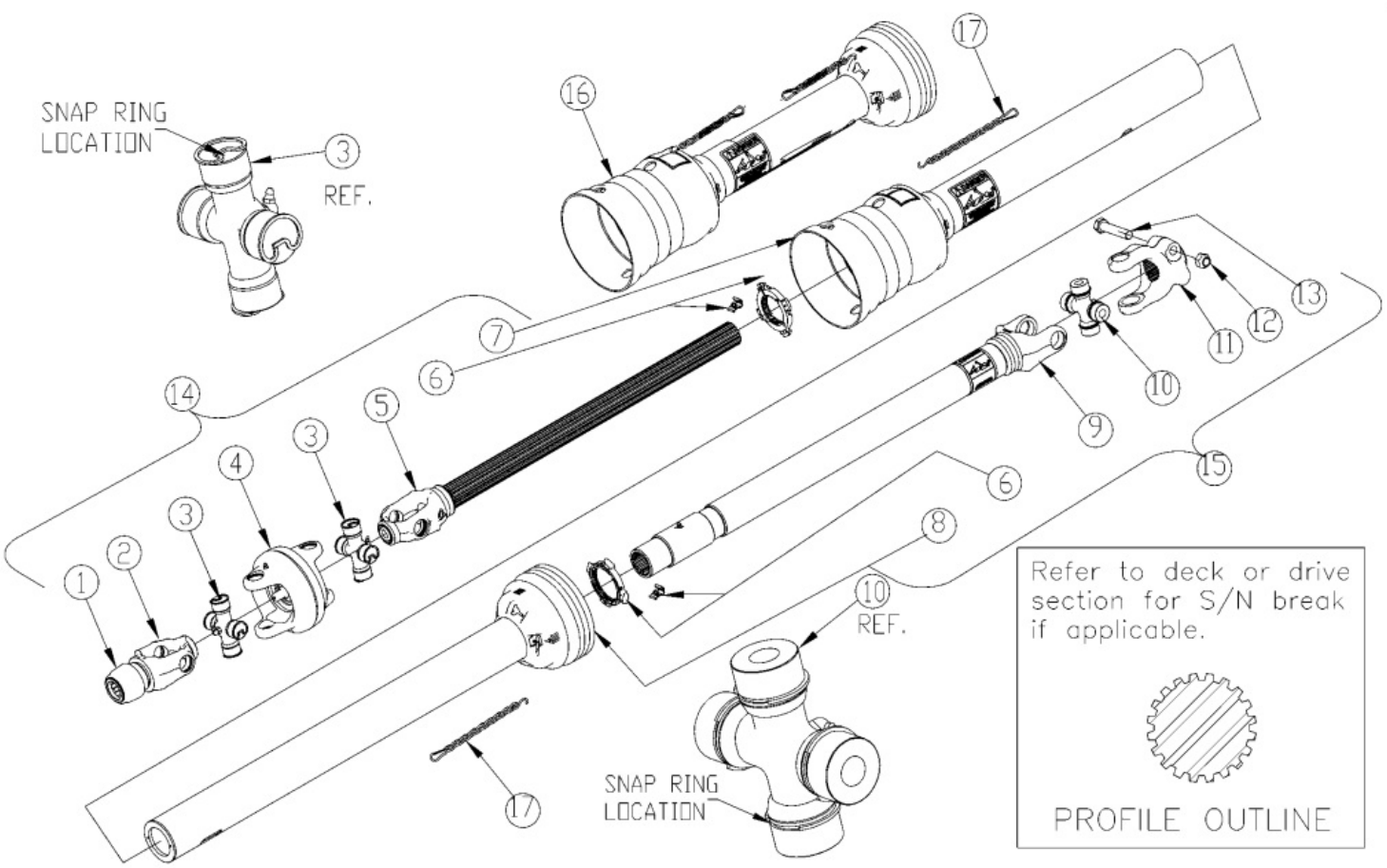

Driveline CV 1.38 1000 RPM (826-644C) Weasler

Applies to Models: RCBM6615 S/N 944729-

Ref.	Part No.	Part Description	Comments
	DWG 30187	Image No.	
	826-644C	DRVLN C6 42 1.38-21 CV	
		*	
1	26-15120	WE SSL/AUTO-LOK REPAIR KIT	
2	68810-1003	WE WWCV AUTO-LOK YOKE ASM	
3	03-15570	WE AB8/AW25EBL CROSS KIT	
4	26-16033	WE WWCV CENTER HOUSING	
5	99-24406	WE YOKE&SHAFT (1.69-20 SPLINE)	
6	19-15135	WE GUARD REPAIR KIT	S/N 712190+
6	19-15121	WE GRD REPAIR KIT	S/N 712189-
7	97-25023	WE OUTER GUARD	
8	96-24406	WE INNER GUARD	
9	98-24406	WE YOKE, TUBE & SLIP SLEEVE	
10	03-15316	WE 55EBL CROSS KIT	
11	55051-1817	WE YOKE	
12	11-14988	WE LOCK NUT .625-11	
13	11-15180	WE BOLT .625-11 X 3.00L GR8	
14	93-25023	WE JOINT&SHFT HALF ASM W/GUARD	
15	92-24406	WE JOINT&TUBE HALF ASM W/GUARD	
16	91-25023	WE GUARD SET	
17	11-80005	WE CHAIN	S/N 928934-

Driveline CV 1000 RPM (826-645C) Weasler

Applies to Models: RCBM6615 S/N 944729-

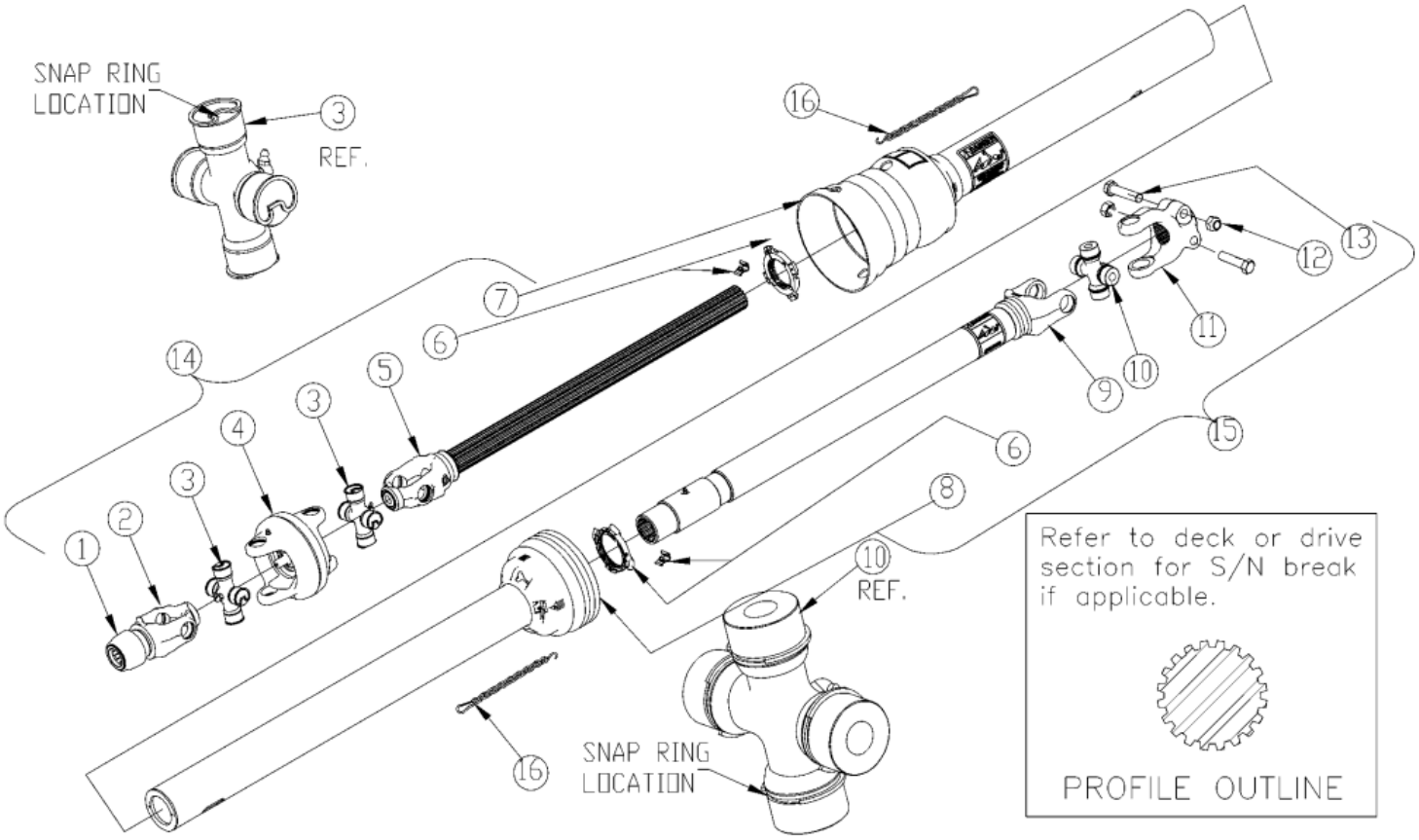

Driveline CV 1000 RPM (826-645C) Weasler

Applies to Models: RCBM6615 S/N 944729-

Ref.	Part No.	Part Description	Comments
	DWG30189	Drawing Image Number	
	826-645C	DRVLN C6 47 1.75-20 CV *	
1	26-13387	WE SSL/AUTO-LOK REPAIR KIT	
2	68810-1005	WE WWCV AUTO-LOK YOKE ASM	
3	03-15570	WE AB8/AW25EBL CROSS KIT	
4	26-16033	WE WWCV CENTER HOUSING	
5	99-24406	WE YOKE&SHAFT (1.69-20 SPLINE)	
6	19-15135	WE GUARD REPAIR KIT	S/N 712190+
6	19-15121	WE GRD REPAIR KIT	S/N 712190-
7	97-25075	WE OUTER GUARD	
8	96-25075	WE INNER GUARD	
9	98-25075	WE YOKE, TUBE & SLIP SLEEVE	
10	03-15316	WE 55EBL CROSS KIT	
11	55051-1817	WE YOKE	
12	11-14988	WE LOCK NUT .625-11	
13	11-15180	WE BOLT .625-11 X 3.00L GR8	
14	93-25075	WE JOINT&SHFT HALF ASM W/GUARD	
15	92-25075	WE JOINT&TUBE HALF ASM W/GUARD	
16	11-80005	WE CHAIN	S/N 712190-928934

Driveline Slip Clutch (146.264.024.1) Comer

Applies to Models: RCBM6615 S/N 944729-, RCB6615 S/N 944729-

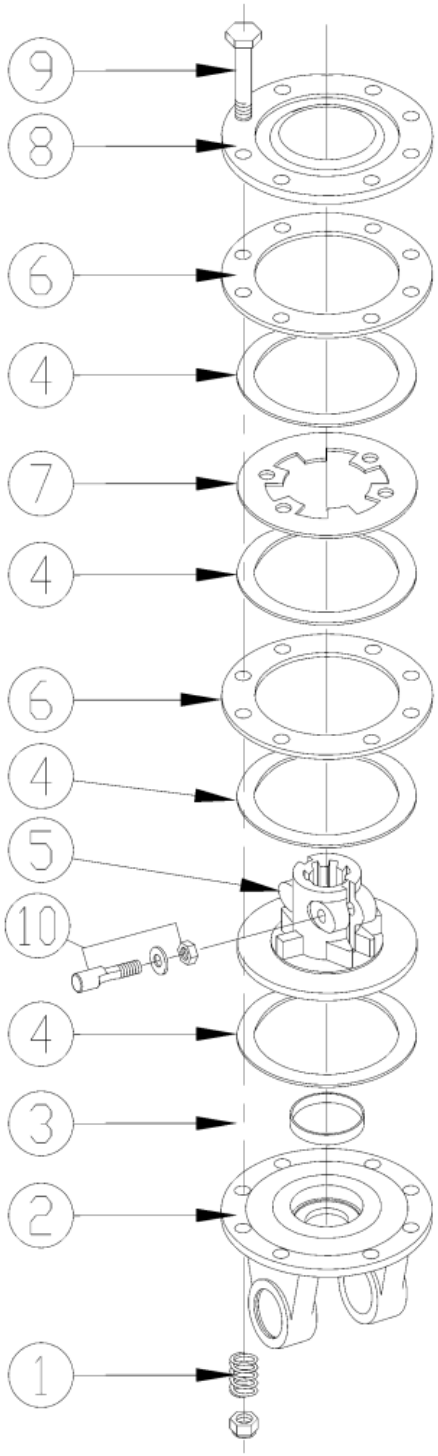

Driveline Slip Clutch (146.264.024.1) Comer

Applies to Models: RCBM6615 S/N 944729-, RCB6615 S/N 944729-

Ref.	Part No.	Part Description	Comments
	DWG 23957	Drawing Image Number	
	146.264.024.1	COMER CLUTCH, COMPLETE ASSY *	
1	180.014.022	COMER SPRING	
2	151.016.037.1	COMER YOKE, FLANGED	
3	180.019.019	COMER BUSH	
4	180.019.340	COMER LINING RING	
4	180.019.018	RPBY 180.019.340	Obsolete
5	151.018.228.1	COMER CLUTCH SUPPORT	
6	180.019.014	COMER INNER PLATE	
7	180.019.115	COMER INTERMEDIATE PLATE	
8	180.019.116.1	COMER PRESSURE PLATE	
9	165.000.548	COMER BOLT WITH NUT M10X100	
10	165.000.589	COMER TAPERED PIN SET 1 3/4	

Driveline Slip Clutch (146.284.020.1) Comer

Applies to Models: RCBM6615 S/N 944729-, RCB6615 S/N 944729-

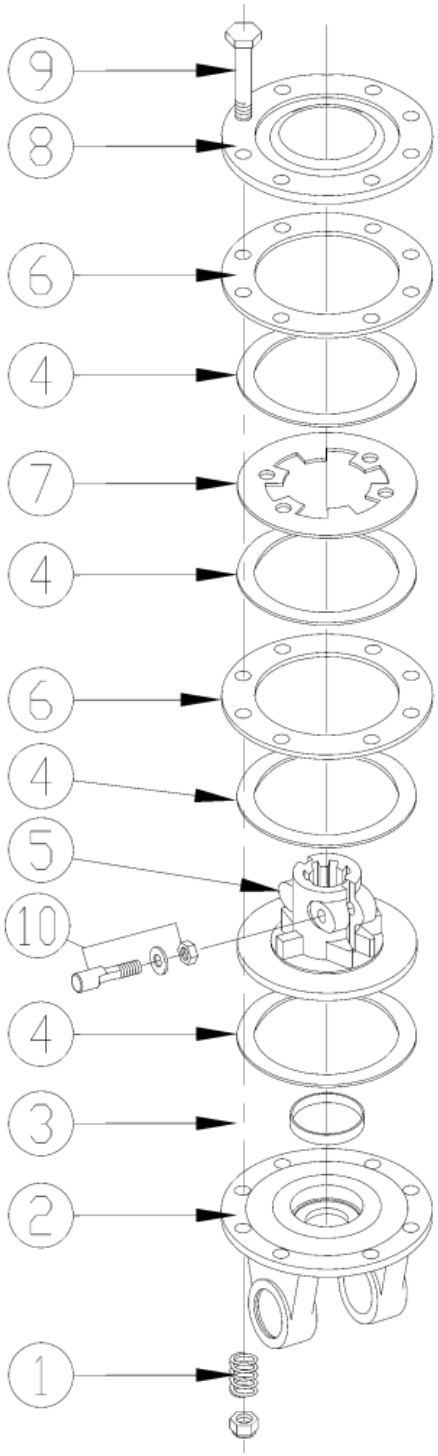

Driveline Slip Clutch (146.284.020.1) Comer

Applies to Models: RCBM6615 S/N 944729-, RCB6615 S/N 944729-

Ref.	Part No.	Part Description	Comments
	DWG23958	Drawing Image Number	
	146.284.020.1	COMER CLUTCH, DISC COMPLETE *	
1	180.014.022	COMER SPRING	
2	151.018.016.1	COMER YOKE, FLANGED	
3	180.019.019	COMER BUSH	
4	180.019.340	COMER LINING RING	
4	180.019.018	RPBY 180.019.340	Obsolete
5	151.018.228.1	COMER CLUTCH SUPPORT	
6	180.019.014	COMER INNER PLATE	
7	180.019.115	COMER INTERMEDIATE PLATE	
8	180.019.116.1	COMER PRESSURE PLATE	
9	165.000.548	COMER BOLT WITH NUT M10X100	
10	165.000.589	COMER TAPERED PIN SET 1 3/4	

Driveline Slip Clutch (395980) Walterscheid

Applies to Models: RCBM6615 S/N 944729-, RCB6615 S/N 944729-

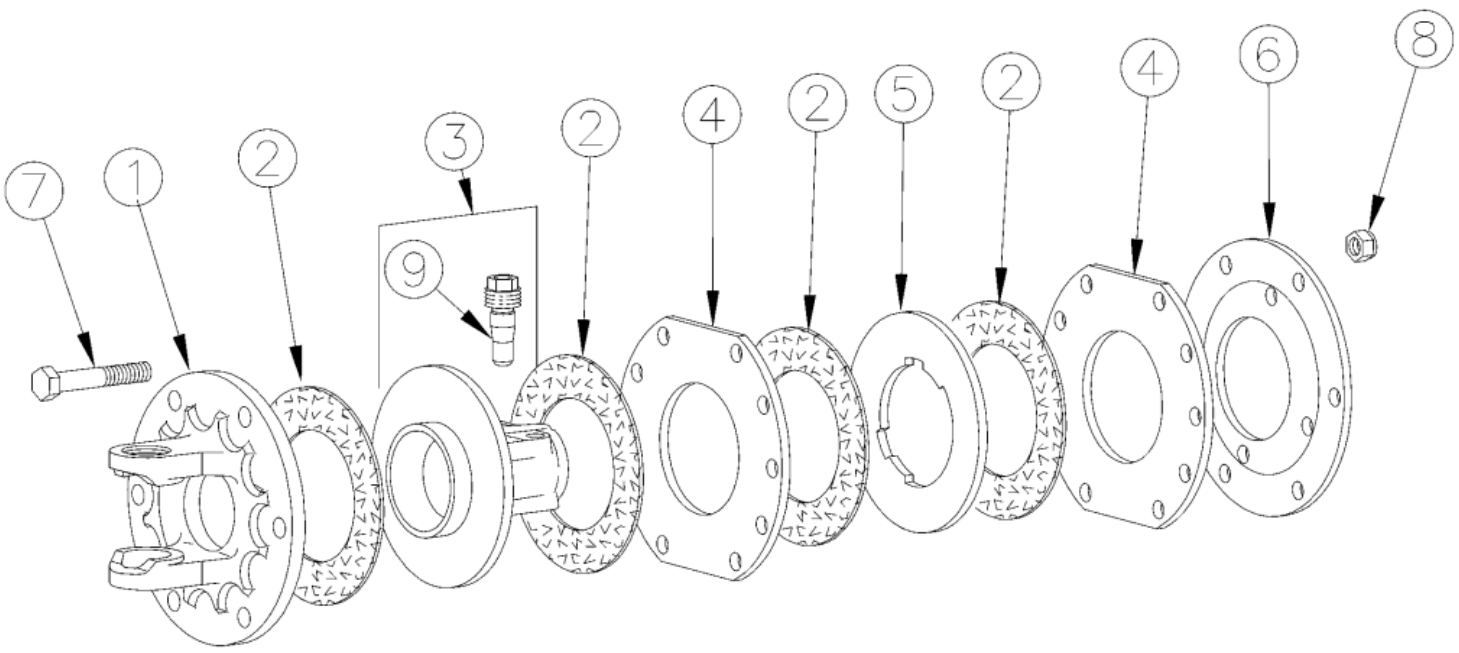

Driveline Slip Clutch (395980) Walterscheid

Applies to Models: RCBM6615 S/N 944729-, RCB6615 S/N 944729-

Ref.	Part No.	Part Description	Comments
	DWG25961	Drawing Image Number	
	395980	WS FRICTION CLUTCH *	
1		WS FLANGE YOKE	
2	168556	WS FRICTION DISK	
3	393916	HUB	
4	335603	DRIVE PLATE	
5	393173	DRIVE PLATE	
6	125545	WS BELLEVILLE SPRING	
7	802-486C	HHCS M12X1.75X80 GR8.8 PLT	
8	803-281C	NUT HEX NYLOCK M12X1.75 PLT	
9	107542	CC LOCK ASSY	

Driveline Wing (826-481C) Comer

Applies to Models: RCBM6615 S/N 944729-, RCB6615 S/N 944729-

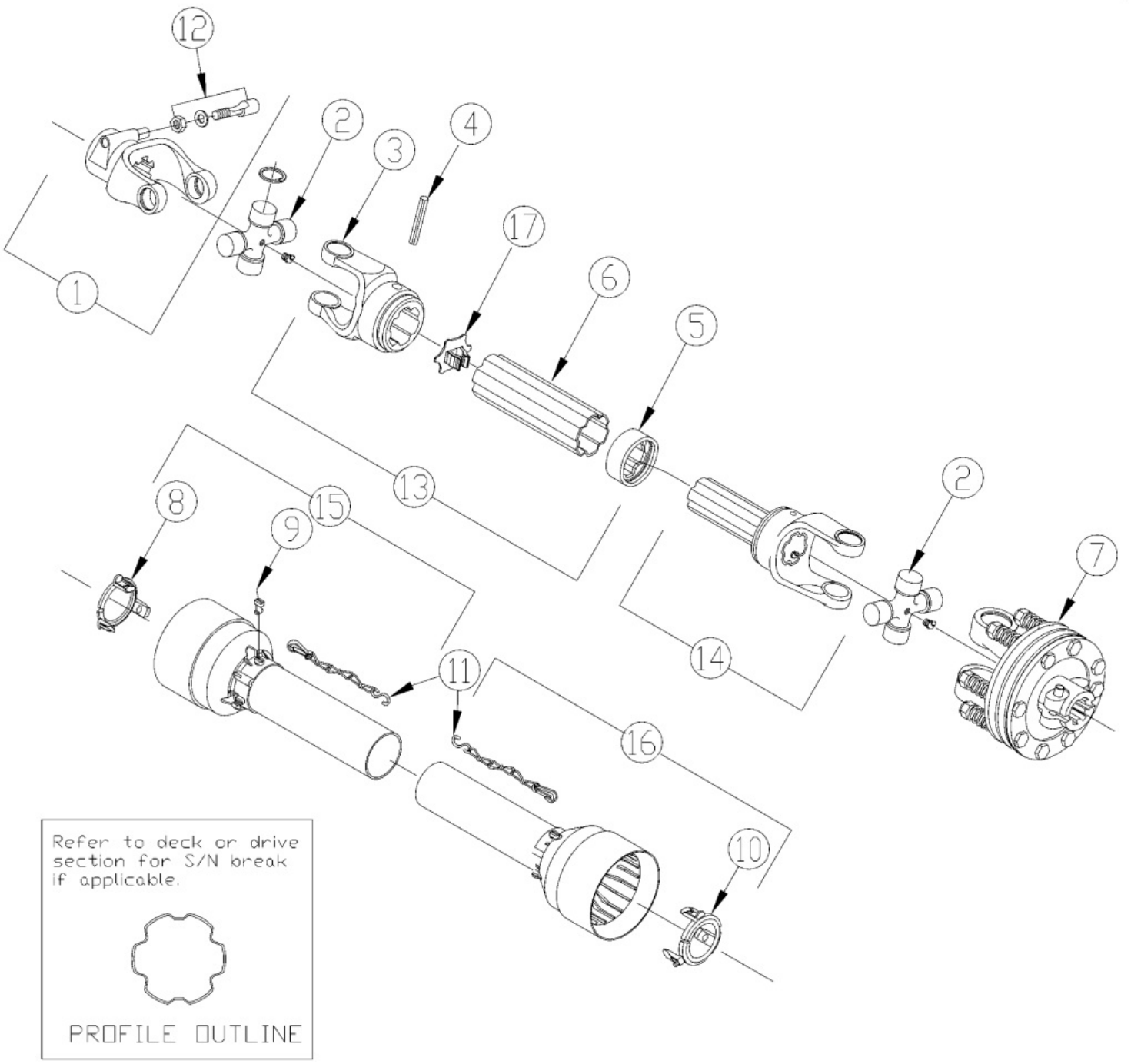

Driveline Wing (826-481C) Comer

Applies to Models: RCBM6615 S/N 944729-, RCB6615 S/N 944729-

Ref.	Part No.	Part Description	Comments
	DWG23953	Drawing Image Number	
	826-481C	RPBY 826-812C *	Obsolete
1	141.028.195.1	COMER YOKE COMPLETE	
2	180.018.004	COMER CROSS ASSEMBLY	
3	151.018.241.1	COMER YOKE OUTER	
4	190.000.243	COMER OUTER TUBE ROLL PIN	
5	180.018.437	COMER WIPER	
6	1522805450710	COMER TUBE OUTER	
7	146.284.020.1	COMER CLUTCH, DISC COMPLETE	
8	180.018.251	COMER RETAINING COLLER INNER	
9	180.014.240	COMER BOLT	
10	180.018.252	COMER RETAINING COLLER INNER	
11	180.016.025	RPBY 044321	(S/N 928934-)
12	165.000.589	COMER TAPERED PIN SET 1 3/4	
13	122.580.023.1	COMER TUBE W/YOKE/LUBE/FEMALE	
14	122.580.511.1	COMER TUBE W/YOKE/LUBE/MALE	
15	1422831949821	COMER HALF FEMALE GRD W/LABEL	
16	1422871029821	COMER HALF MALE GUARDING	
17	180.018.393	COMER CAP OUTER TUBE, PLASTIC	

Driveline Wing (826-481C) Walterscheid

Applies to Models: RCBM6615 S/N 944729-, RCB6615 S/N 944729-

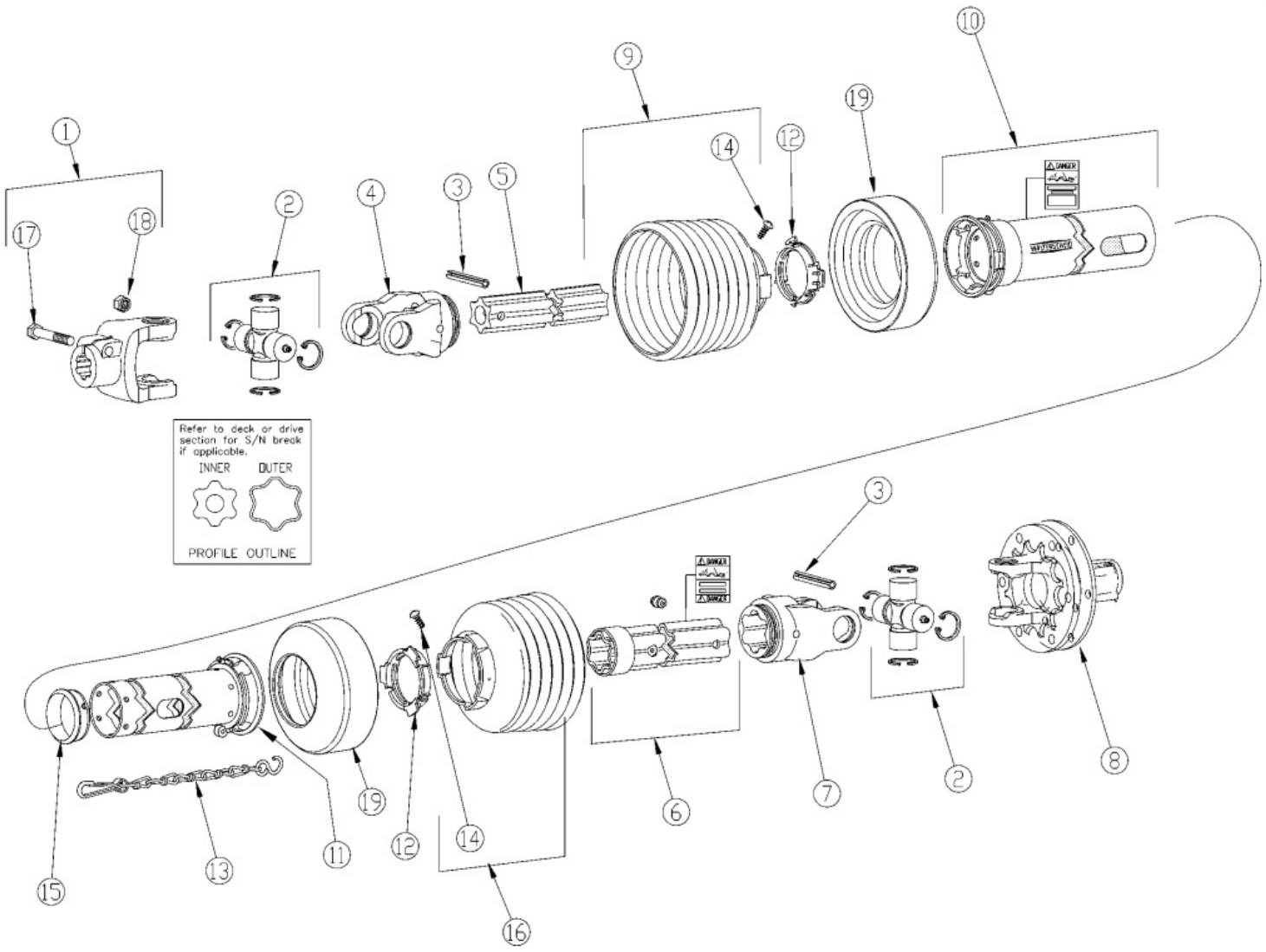

Driveline Wing (826-481C) Walterscheid

Applies to Models: RCBM6615 S/N 944729-, RCB6615 S/N 944729-

Ref.	Part No.	Part Description	Comments
	DWG25919	Drawing Image Number	
	826-481C	RPBY 826-812C *	Obsolete
1	325027	WS YOKE 1 3/4-20 SPL.I.C. 2500	
2	312209	WS CROSS & BRG KIT 2500	
3	304046	WS SPRING PIN 10 X 90	
4	097133	WS INBOARD YOKE S4	
5	323524	WS INNER PROFILE S4L	
6	397493	WS OUTER PROFILE S5L	
7	097140	WS INBOARD YOKE S5	
8	395980	WS FRICTION CLUTCH	
9	377437	WS SHIELD CONE 7 RIB	
10	394874	WS OUT SHIELD TUBE OVL	
11	387767	WS INNER SHIELD TUBE RND	
12	087276	WS BRG RING - SC25	
13	044321	DRIVELINE SHIELD SAFETY CHAIN	(S/N 928934-)
14	365305	WS SCREW	
15	396295	WS SUPPORT BEARING	
16	377436	WS SHIELD CONE - 6 RIB	
17	702352	WS HEX BOLT M16 X 90 GR 8.8	
18	304011	WS LOCK NUT M16	
19	359474	WS REINFORCING COLLAR	

Driveline Wing (826-812C) Comer

Applies to Models: RCBM6615 S/N 944729-, RCB6615 S/N 944729-

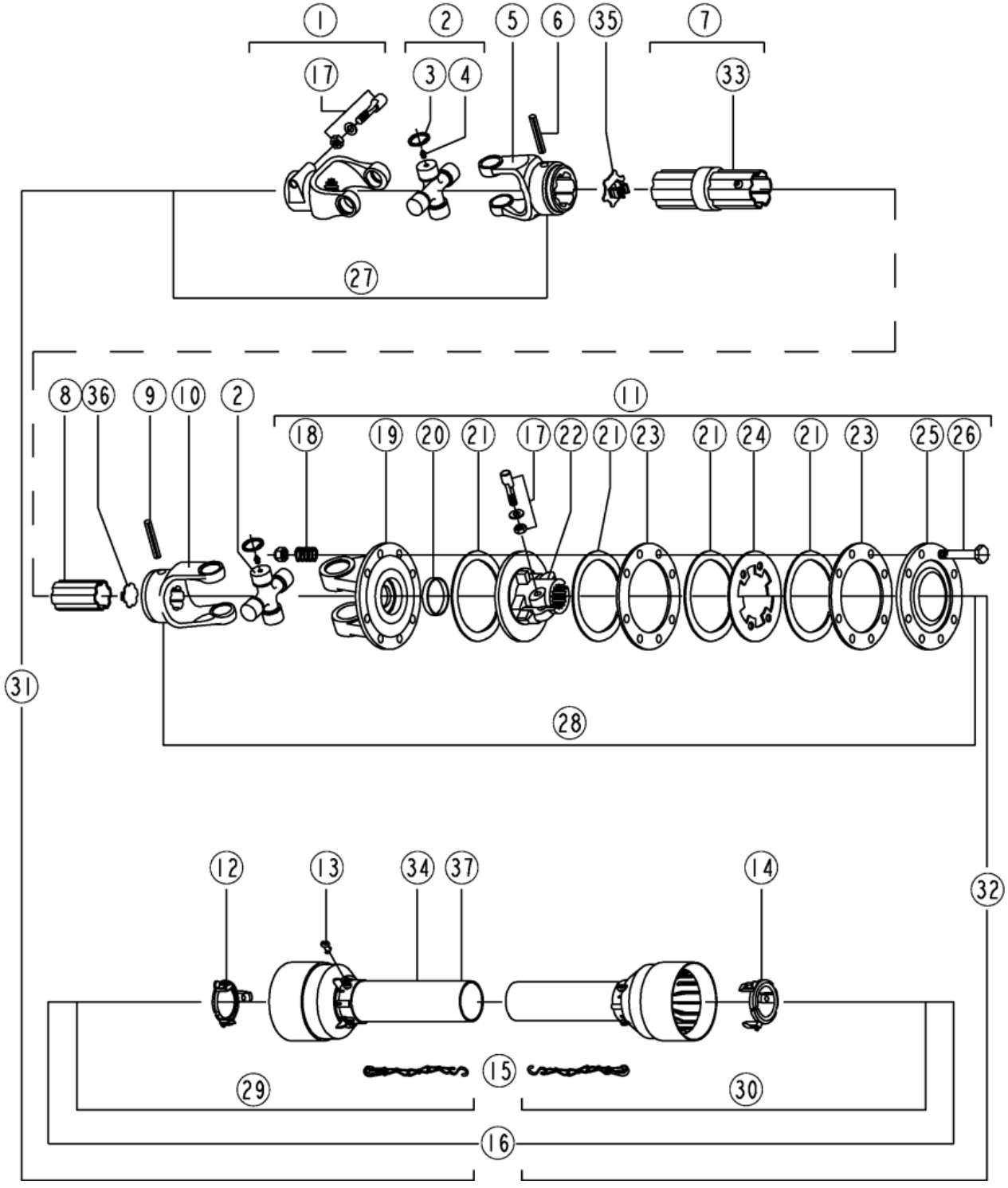

Driveline Wing (826-812C) Comer

Applies to Models: RCBM6615 S/N 944729-, RCB6615 S/N 944729-

Ref.	Part No.	Part Description	Comments
	DWG 37553	Image No.	
	826-812C	DRVLN C5 48 1.75-20 FX CLTCH *	
1	141.028.195.1	COMER YOKE COMPLETE	
2	180.018.581	CO CROSS JOURNAL SET	
3	190.000.035	CO CIRCLIP	
4	190.000.047	CO GREASE NIPPLE	
5	151.018.241.1	COMER YOKE OUTER	
6	190.000.243	COMER OUTER TUBE ROLL PIN	
7	150.281.5197810	CO COMPLETE OUTER TUBE W/LABEL	
8	159.280.168	COMER INNER TUBE	
9	190.000.271	COMER ROLL PIN FOR INNER TUBE	
10	151.018.242.1	COMER INNER YOKE	
11	146.284.020.1	COMER CLUTCH, DISC COMPLETE	
12	180.018.251	COMER RETAINING COLLER INNER	
13	180.014.240	COMER BOLT	
14	180.018.252	COMER RETAINING COLLER INNER	
15	180.016.790	CO SAFTEY CHAINS	(S/N 928934-)
16	142.286.2519821	CO COMPLETE GUARD W/MANUAL	
17	165.000.589	COMER TAPERED PIN SET 1 3/4	
18	180.014.022	COMER SPRING	
19	151.018.016.1	COMER YOKE, FLANGED	
20	180.019.019	COMER BUSH	
21	180.019.340	COMER LINING RING	
21	180.019.018	RPBY 180.019.340	Obsolete
22	151.018.228.1	COMER CLUTCH SUPPORT	
23	180.019.014	COMER INNER PLATE	
24	180.019.115	COMER INTERMEDIATE PLATE	
25	180.019.116.1	COMER PRESSURE PLATE	
26	165.000.548	COMER BOLT WITH NUT M10X100	
27	121.028.1031.01	CO U-JOINT FOR OUTER TUBE	
28	121.028.1025.01	CO U-JOINT FOR INNER TUBE	
29	142.283.2509821	CO HALF FEMALE GUARD	
30	142.287.2199821	CO HALF MALE GUARD	
31	123.386.190.01	CO HALF FEMALE SHFT W/GUARDING	
32	123.486.343.01	CO HALF MALE SHAFT W/GUARDING	
33	190.000.098	COMER DANGER LABEL OUTER TUBE	
34	190.000.099	COMER DANGER LABEL GUARD OUTER	
35	180.018.393	COMER CAP OUTER TUBE, PLASTIC	
36	180.018.435	COMER INNER CAP	
37	190.000.932	CO LABEL W/CUSTOMER CODE	

Driveline Wing (826-812C) Walterscheid

Applies to Models: RCBM6615 S/N 944729-, RCB6615 S/N 944729-

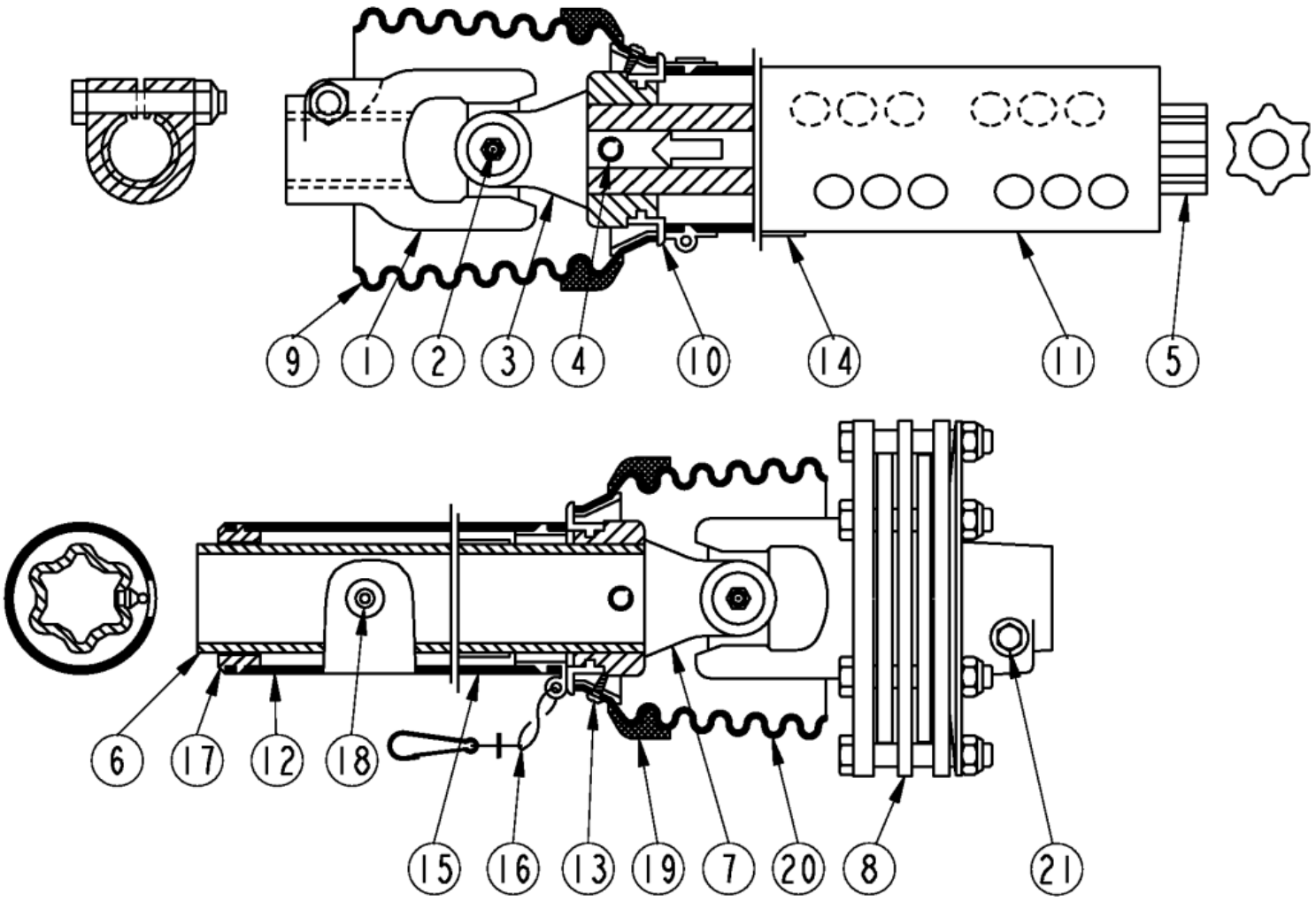

Driveline Wing (826-812C) Walterscheid

Applies to Models: RCBM6615 S/N 944729-, RCB6615 S/N 944729-

Ref.	Part No.	Part Description	Comments
	DWG 37502	Image No.	
	826-812C	DRVLN C5 48 1.75-20 FX CLTCH *	
1	325027	WS YOKE 1 3/4-20 SPL.I.C. 2500	
2	190224	WS CROSS & BEARING KIT	
3	097133	WS INBOARD YOKE S4	
4	304046	WS SPRING PIN 10 X 90	
5	323524	WS INNER PROFILE S4L	
6	397493	WS OUTER PROFILE S5L	
7	097140	WS INBOARD YOKE S5	
8	395980	WS FRICTION CLUTCH	
9	125142	WS GUARD CONE 7 RIB	
10	087276	WS BRG RING - SC25	
11	371708	WS GUARD TUBE OUTER	
11	371709	RPBY 371708	Obsolete
12	399469	WS GUARD TUBE INNER	
13	365305	WS SCREW	
14	818-552C	DECAL DANGER PTO DRIVELINE	
14	383333	RPBY 818-552C	Obsolete
15	818-540C	DECAL DANGER GUARD MISS PTO	
15	383334	RPBY 818-540C	Obsolete
16	044321	DRIVELINE SHIELD SAFETY CHAIN	(S/N 928934-)
17	396295	WS SUPPORT BEARING	
18	380371	WS ZERK	
19	359474	WS REINFORCING COLLAR	
20	125140	WS GUARD CONE 6 RIB	
21	107542	CC LOCK ASSY	

Gearbox (826-320C) Comer

Applies to Models: RCB6615 S/N 944729-

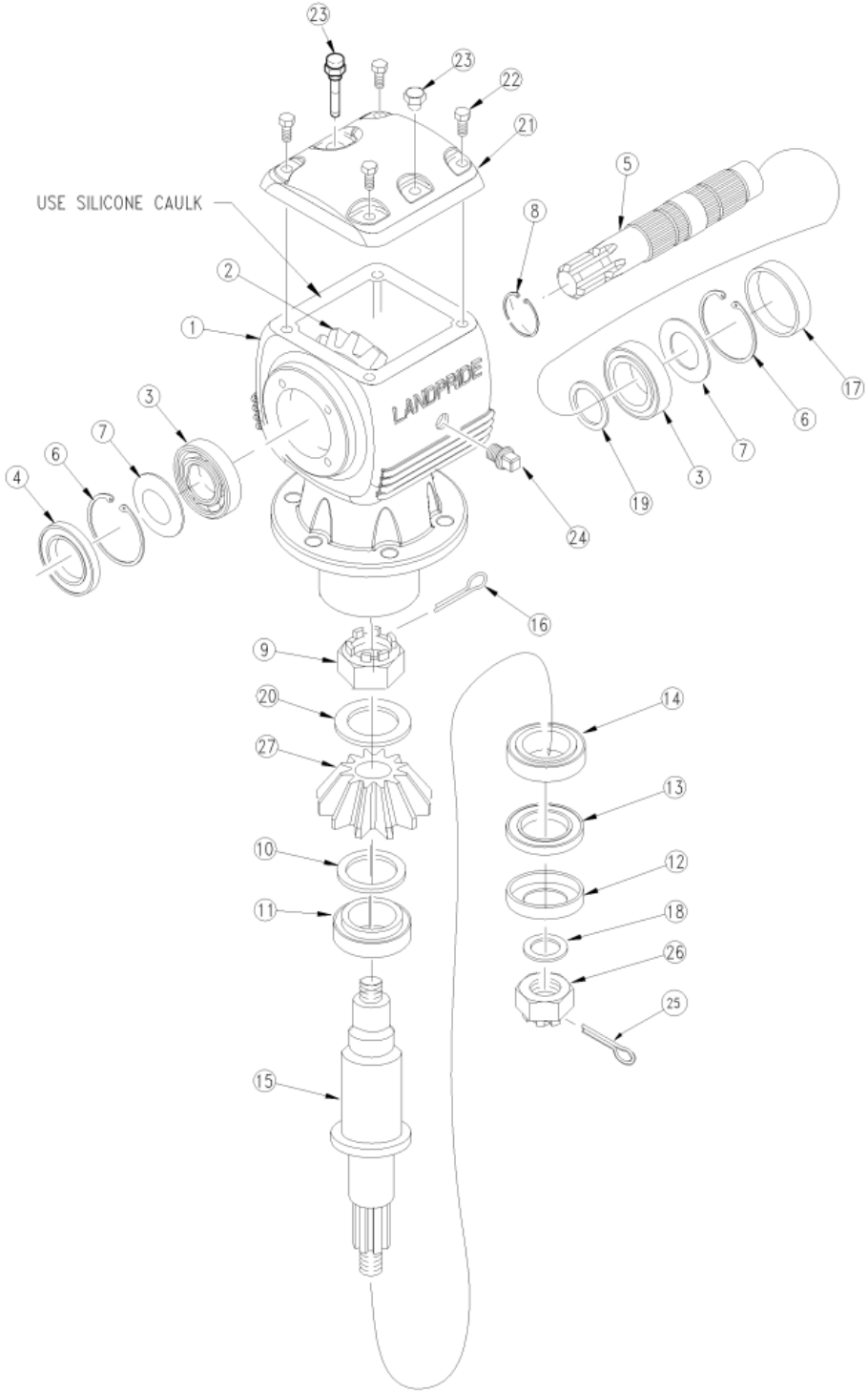

Gearbox (826-320C) Comer

Applies to Models: RCB6615 S/N 944729-

Ref.	Part No.	Part Description	Comments
	DWG 21167	Drawing Image Number	
	826-320C	RPBY 826-939C *	(Obsolete) Complete assembly
1	U0.125.0532.00	CO HOUSING	Obsolete
2	U0.125.5005.00	CO CROWN GEAR Z22 M8	
3	8.0.9.00143	CO BRG 30209 TAPERED	Includes bearing and race
4	8.7.1.02348	CO DUST LIP (45X85X10)	
4	8.7.3.00331	RPBY 8.7.1.02348	Obsolete
5	U0.125.2050.00	CO INPUT SHAFT 1 3/4"-20	
6	8.5.2.00332	CO SNAP RING UNI 7437	
7	A.709.500	COMER SHIM KIT	
7	0.709.7500.00	RPBY A.709.500	Obsolete
8	8.5.1.00533	CO SNAP RING 50 UNI7435	
9	U0.125.7100.00	CO CASTLE NUT	
10	A.712.500	COMER SHIM KIT	
10	0.712.7500.00	RPBY A.712.500	Obsolete
11	8.0.9.01090	CO BRG 32210 (50X90X24.75)	
12	1.181.7101.00	CO SEAL PROTECTOR	
13	8.7.1.02349	CO OIL SEAL 60X110X12 SL	
14	8.0.9.00079	CO BRG 30212 (60X110X23.75)	
15	U0.125.3003.00	CO OUTPUT SHAFT	
16	8.4.7.02265	CO COTTER PIN B 5X60	
17	0.121.7101.00	CO CAP	
18	0.288.7101.00	CO BLANK WASHER	
19	0.252.7525.00	CO SHIM 45.3X2.5	
20	0.285.7510.00	CO SHIM 40.3 X 61.7 X 1	
21	U0.125.1303.00	CO TOP COVER	
21	U0.125.1301.00	RPBY U0.125.1303.00	Obsolete
22	8.1.1.00501	CO BOLT M10X22 HHB	
23	826-486C	COMER U0.125.7003.00 DIPSTICK	
23	U0.125.7003.00	RPBY 826-486C	Obsolete
24	8.6.5.00006	CO OIL PLUG 3/8	
25	8.4.7.01045	CO COTTER PIN B6X70 SLD-SPRTLY	
26	8.2.2.00560	CO CASTLE NUT M36X3	
27	U0.125.6004.00	CO CROWN GEAR Z15 M8 *	
		Notes: Oil Type 80-90W Capacity 10 Pints	

Gearbox (826-321C) Comer

Applies to Models: RCB6615 S/N 944729-

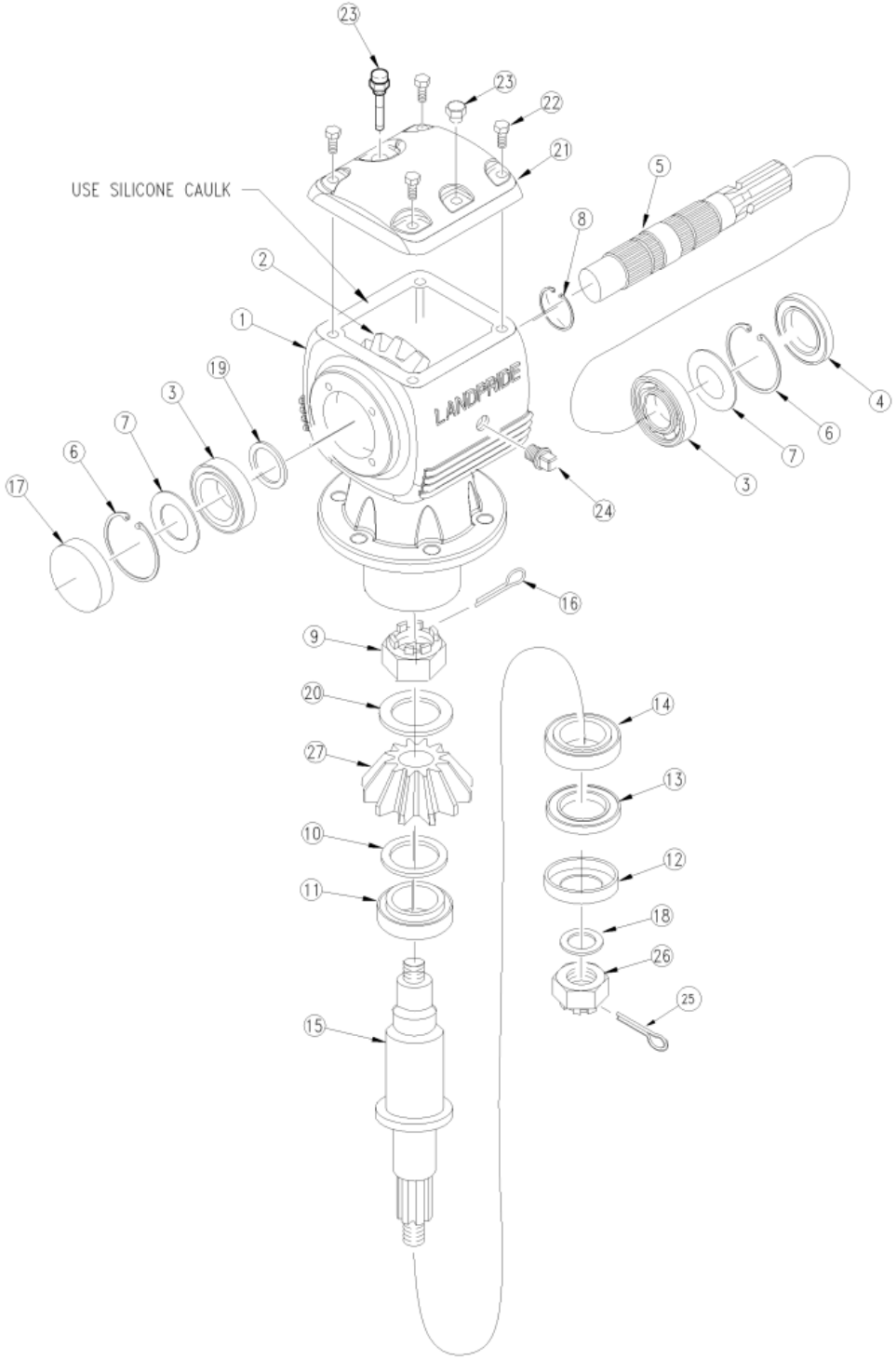

Gearbox (826-321C) Comer

Applies to Models: RCB6615 S/N 944729-

Ref.	Part No.	Part Description	Comments
	DWG 21171	Drawing Image Number	
	826-321C	GBOX RC60 1:1.46 REV *	(Obsolete) Complete assembly
1	U0.125.0532.00	CO HOUSING	
2	U0.125.5005.00	CO CROWN GEAR Z22 M8	
3	8.0.9.00143	CO BRG 30209 TAPERED	
4	8.7.1.02348	CO DUST LIP (45X85X10)	
4	8.7.3.00331	RPBY 8.7.1.02348	Obsolete
5	U0.125.2050.00	CO INPUT SHAFT 1 3/4"-20	
6	8.5.2.00332	CO SNAP RING UNI 7437	
7	A.709.500	COMER SHIM KIT	
7	0.709.7500.00	RPBY A.709.500	Obsolete
8	8.5.1.00533	CO SNAP RING 50 UNI7435	
9	U0.125.7100.00	CO CASTLE NUT	
10	A.712.500	COMER SHIM KIT	
10	0.712.7500.00	RPBY A.712.500	Obsolete
11	8.0.9.01090	CO BRG 32210 (50X90X24.75)	
12	1.181.7101.00	CO SEAL PROTECTOR	
13	8.7.1.02349	CO OIL SEAL 60X110X12 SL	
14	8.0.9.00079	CO BRG 30212 (60X110X23.75)	
15	U0.125.3003.00	CO OUTPUT SHAFT	
16	8.4.7.02265	CO COTTER PIN B 5X60	
17	0.121.7101.00	CO CAP	
18	0.288.7101.00	CO BLANK WASHER	
19	0.252.7525.00	CO SHIM 45.3X2.5	
20	0.285.7510.00	CO SHIM 40.3 X 61.7 X 1	
21	U0.125.1303.00	CO TOP COVER	
21	U0.125.1301.00	RPBY U0.125.1303.00	Obsolete
22	8.1.1.00501	CO BOLT M10X22 HHB	
23	826-486C	COMER U0.125.7003.00 DIPSTICK	
23	U0.125.7003.00	RPBY 826-486C	Obsolete
24	8.6.5.00006	CO OIL PLUG 3/8	
25	8.4.7.01045	CO COTTER PIN B6X70 SLD-SPRTLY	
26	8.2.2.00560	CO CASTLE NUT M36X3	
27	U0.125.6004.00	CO CROWN GEAR Z15 M8 *	
		Notes: Oil Type 80-90W Capacity 10 Pints	

Gearbox (826-322C) Comer

Applies to Models: RCBM6615 S/N 944729-

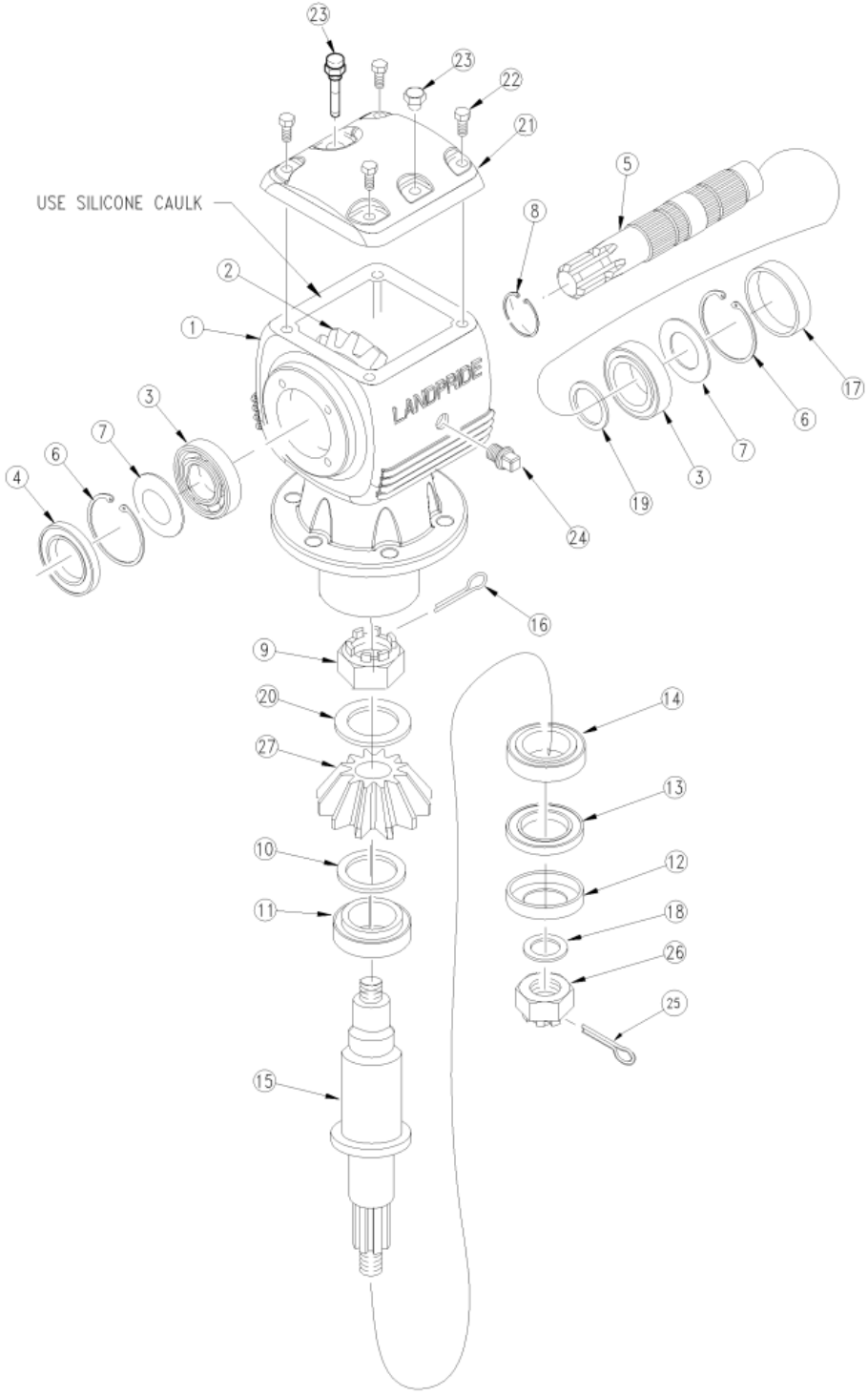

Gearbox (826-322C) Comer

Applies to Models: RCBM6615 S/N 944729-

Ref.	Part No.	Part Description	Comments
	DWG 21167	Drawing Image Number	
	826-322C	GBOX RCM60 1:1.21 STD *	Complete assembly
1	U0.125.0532.00	CO HOUSING	
2	U0.125.5003.00	CO CROWN GEAR Z22 M7.8	
3	8.0.9.00143	CO BRG 30209 TAPERED	Includes bearing and race
4	8.7.1.02348	CO DUST LIP (45X85X10)	
4	8.7.3.00331	RPBY 8.7.1.02348	Obsolete
5	U0.125.2050.00	CO INPUT SHAFT 1 3/4"-20	
6	8.5.2.00332	CO SNAP RING UNI 7437	
7	A.709.500	COMER SHIM KIT	
7	0.709.7500.00	RPBY A.709.500	Obsolete
8	8.5.1.00533	CO SNAP RING 50 UNI7435	
9	U0.125.7100.00	CO CASTLE NUT	
10	A.712.500	COMER SHIM KIT	
10	0.712.7500.00	RPBY A.712.500	Obsolete
11	8.0.9.01090	CO BRG 32210 (50X90X24.75)	
12	1.181.7101.00	CO SEAL PROTECTOR	
13	8.7.1.02349	CO OIL SEAL 60X110X12 SL	
14	8.0.9.00079	CO BRG 30212 (60X110X23.75)	
15	U0.125.3003.00	CO OUTPUT SHAFT	
16	8.4.7.02265	CO COTTER PIN B 5X60	
17	0.121.7101.00	CO CAP	
18	0.288.7101.00	CO BLANK WASHER	
19	0.252.7525.00	CO SHIM 45.3X2.5	
20	0.285.7510.00	CO SHIM 40.3 X 61.7 X 1	
21	U0.125.1303.00	CO TOP COVER	
22	8.1.1.00501	CO BOLT M10X22 HHB	
23	826-486C	COMER U0.125.7003.00 DIPSTICK	
24	8.6.5.00006	CO OIL PLUG 3/8	
25	8.4.7.01045	CO COTTER PIN B6X70 SLD-SPRTLY	
26	8.2.2.00560	CO CASTLE NUT M36X3	
27	U0.125.6003.00	CO CROWN GEAR Z18 M7.8 *	
		Notes: Oil Type 80-90W Capacity 10 Pints	

Gearbox (826-323C) Comer

Applies to Models: RCBM6615 S/N 944729-

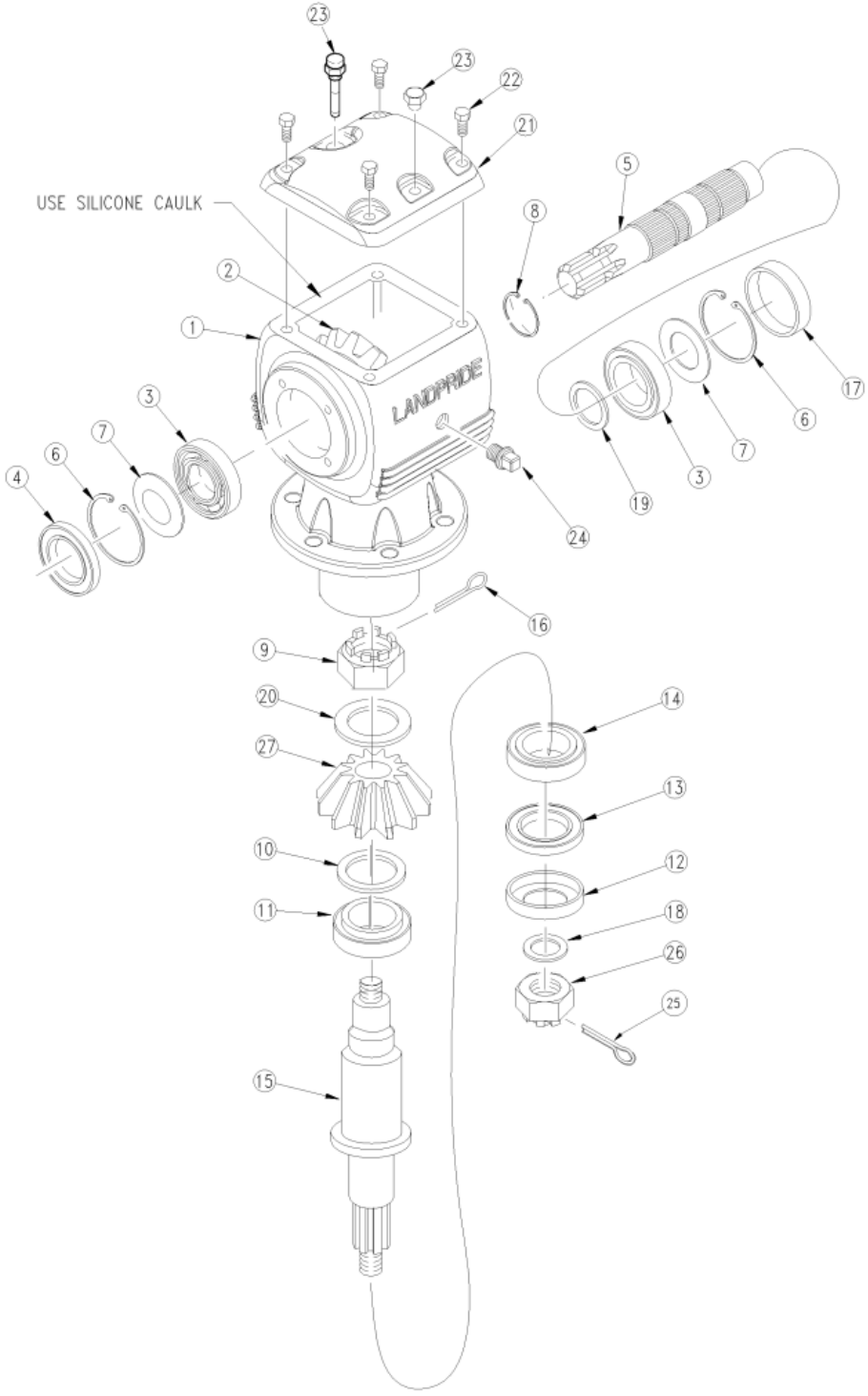

Gearbox (826-323C) Comer

Applies to Models: RCBM6615 S/N 944729-

Ref.	Part No.	Part Description	Comments
	DWG 21167	Drawing Image Number	
	826-323C	GBOX RCM60 1.21:1 STD *	Complete assembly
1	U0.125.0532.00	CO HOUSING	
2	U0.125.6003.00	CO CROWN GEAR Z18 M7.8	
3	8.0.9.00143	CO BRG 30209 TAPERED	Includes bearing and race
4	8.7.1.02348	CO DUST LIP (45X85X10)	
4	8.7.3.00331	RPBY 8.7.1.02348	Obsolete
5	U0.125.2050.00	CO INPUT SHAFT 1 3/4"-20	
6	8.5.2.00332	CO SNAP RING UNI 7437	
7	A.709.500	COMER SHIM KIT	
7	0.709.7500.00	RPBY A.709.500	Obsolete
8	8.5.1.00533	CO SNAP RING 50 UNI7435	
9	U0.125.7100.00	CO CASTLE NUT	
10	A.712.500	COMER SHIM KIT	
10	0.712.7500.00	RPBY A.712.500	Obsolete
11	8.0.9.01090	CO BRG 32210 (50X90X24.75)	
12	1.181.7101.00	CO SEAL PROTECTOR	
13	8.7.1.02349	CO OIL SEAL 60X110X12 SL	
14	8.0.9.00079	CO BRG 30212 (60X110X23.75)	
15	U0.125.3003.00	CO OUTPUT SHAFT	
16	8.4.7.02265	CO COTTER PIN B 5X60	
17	0.121.7101.00	CO CAP	
18	0.288.7101.00	CO BLANK WASHER	
19	0.252.7525.00	CO SHIM 45.3X2.5	
20	0.285.7510.00	CO SHIM 40.3 X 61.7 X 1	
21	U0.125.1303.00	CO TOP COVER	
22	8.1.1.00501	CO BOLT M10X22 HHB	
23	826-486C	COMER U0.125.7003.00 DIPSTICK	
23	U0.125.7003.00	RPBY 826-486C	Obsolete
24	8.6.5.00006	CO OIL PLUG 3/8	
25	8.4.7.01045	CO COTTER PIN B6X70 SLD-SPRTLY	
26	8.2.2.00560	CO CASTLE NUT M36X3	
27	U0.125.5003.00	CO CROWN GEAR Z22 M7.8 *	
		Notes: Oil Type 80-90W Capacity 10 Pints	

Gearbox (826-324C) Comer

Applies to Models: RCBM6615 S/N 944729-

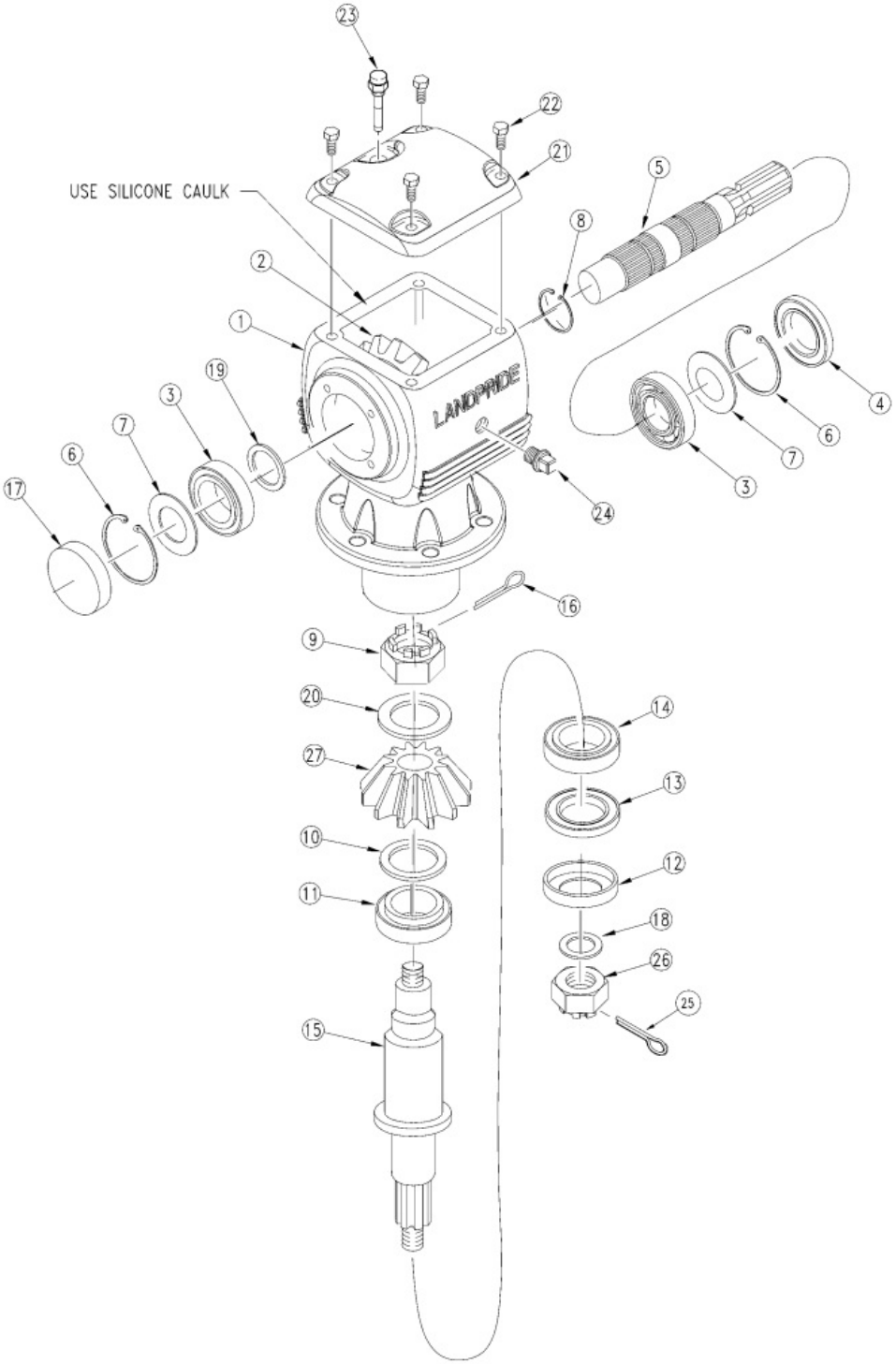

Gearbox (826-324C) Comer

Applies to Models: RCBM6615 S/N 944729-

Ref.	Part No.	Part Description	Comments
	DWG 24726	Drawing Image Number	
	826-324C	RPBY 826-944C *	Complete assembly
1	U0.125.0532.00	CO HOUSING	
2	U0.125.5003.00	CO CROWN GEAR Z22 M7.8	
3	8.0.9.00143	CO BRG 30209 TAPERED	
4	8.7.1.02348	CO DUST LIP (45X85X10)	
4	8.7.3.00331	RPBY 8.7.1.02348	Obsolete
5	U0.125.2050.00	CO INPUT SHAFT 1 3/4"-20	
6	8.5.2.00332	CO SNAP RING UNI 7437	
7	A.709.500	COMER SHIM KIT	
7	0.709.7500.00	RPBY A.709.500	Obsolete
8	8.5.1.00533	CO SNAP RING 50 UNI7435	
9	U0.125.7100.00	CO CASTLE NUT	
10	A.712.500	COMER SHIM KIT	
10	0.712.7500.00	RPBY A.712.500	Obsolete
11	8.0.9.01090	CO BRG 32210 (50X90X24.75)	
12	1.181.7101.00	CO SEAL PROTECTOR	
13	8.7.1.02349	CO OIL SEAL 60X110X12 SL	
14	8.0.9.00079	CO BRG 30212 (60X110X23.75)	
15	U0.125.3003.00	CO OUTPUT SHAFT	
16	8.4.7.02265	CO COTTER PIN B 5X60	
17	0.121.7101.00	CO CAP	
18	0.288.7101.00	CO BLANK WASHER	
19	0.252.7525.00	CO SHIM 45.3X2.5	
20	0.285.7510.00	CO SHIM 40.3 X 61.7 X 1	
21	U0.125.1301.00	RPBY U0.125.1303.00	
22	8.1.1.00501	CO BOLT M10X22 HHB	
23	826-486C	COMER U0.125.7003.00 DIPSTICK	
23	U0.125.7003.00	RPBY 826-486C	Obsolete
24	8.6.5.00006	CO OIL PLUG 3/8	
25	8.4.7.01045	CO COTTER PIN B6X70 SLD-SPRTLY	
26	8.2.2.00560	CO CASTLE NUT M36X3	
27	U0.125.6003.00	CO CROWN GEAR Z18 M7.8 *	
		Notes: Oil Type 80-90W Capacity 10 Pints	

Gearbox (826-729C)

Applies to Models: RCB6615 S/N 944729-

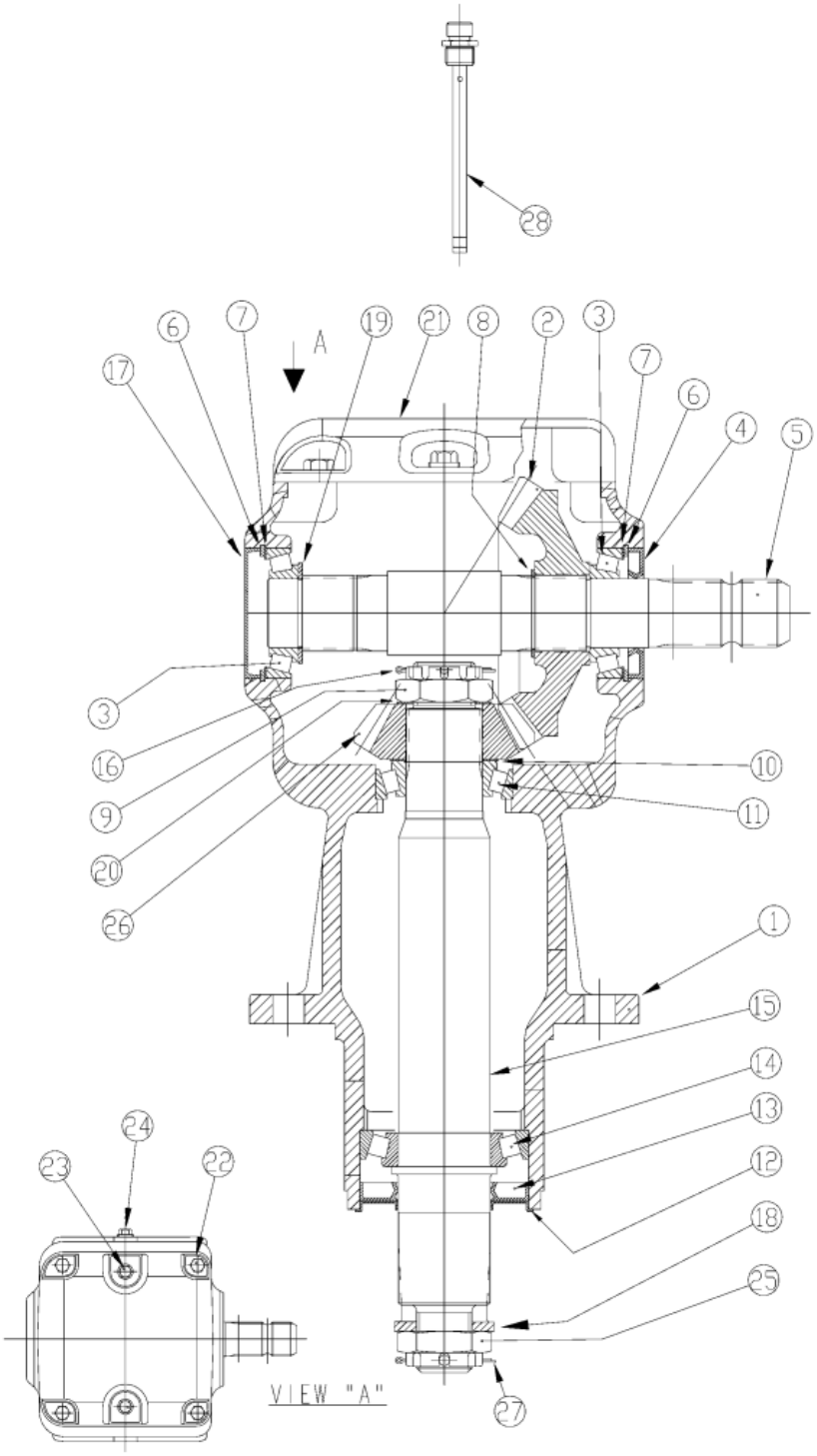

Gearbox (826-729C)

Applies to Models: RCB6615 S/N 944729-

Ref.	Part No.	Part Description	Comments
	DWG 33987	Drawing Image Number	
	826-729C	GBOX RC60 1:1.60 STD	
		*	
1	U0.125.0532.00	CO HOUSING	
2	U0.125.6053.00	CO GEAR CROWN Z24 M7.25	
3	8.0.9.00143	CO BRG 30209 TAPERED	
4	8.7.1.02348	CO DUST LIP (45X85X10)	
4	8.7.3.00331	RPBY 8.7.1.02348	Obsolete
5	U0.125.2050.00	CO INPUT SHAFT 1 3/4"-20	
6	8.5.2.00332	CO SNAP RING UNI 7437	
7	A.709.500	COMER SHIM KIT	
8	8.5.1.00533	CO SNAP RING 50 UNI7435	
9	U0.125.7100.00	CO CASTLE NUT	
10	A.712.500	COMER SHIM KIT	
11	8.0.9.01090	CO BRG 32210 (50X90X24.75)	
12	1.181.7101.00	CO SEAL PROTECTOR	
13	8.7.1.02349	CO OIL SEAL 60X110X12 SL	
14	8.0.9.00079	CO BRG 30212 (60X110X23.75)	
15	U0.125.3003.00	CO OUTPUT SHAFT	
16	8.4.7.02265	CO COTTER PIN B 5X60	
17	0.121.7101.00	CO CAP	
18	0.288.7101.00	CO BLANK WASHER	
19	0.252.7525.00	CO SHIM 45.3X2.5	
20	0.285.7510.00	CO SHIM 40.3 X 61.7 X 1	
21	U0.125.1303.00	CO TOP COVER	
22	8.1.1.00501	CO BOLT M10X22 HHB	
23	8.6.5.00203	CO PLUG 1/2" GAS	
24	8.6.5.00006	CO OIL PLUG 3/8	
25	8.2.2.00560	CO CASTLE NUT M36X3	
26	U0.125.5053.00	CO GEAR PINION Z15 M7.25	
27	8.4.7.01045	CO COTTER PIN B6X70 SLD-SPRTLY	
28	826-486C	COMER U0.125.7003.00 DIPSTICK	

Gearbox (826-730C)

Applies to Models: RCB6615 S/N 944729-

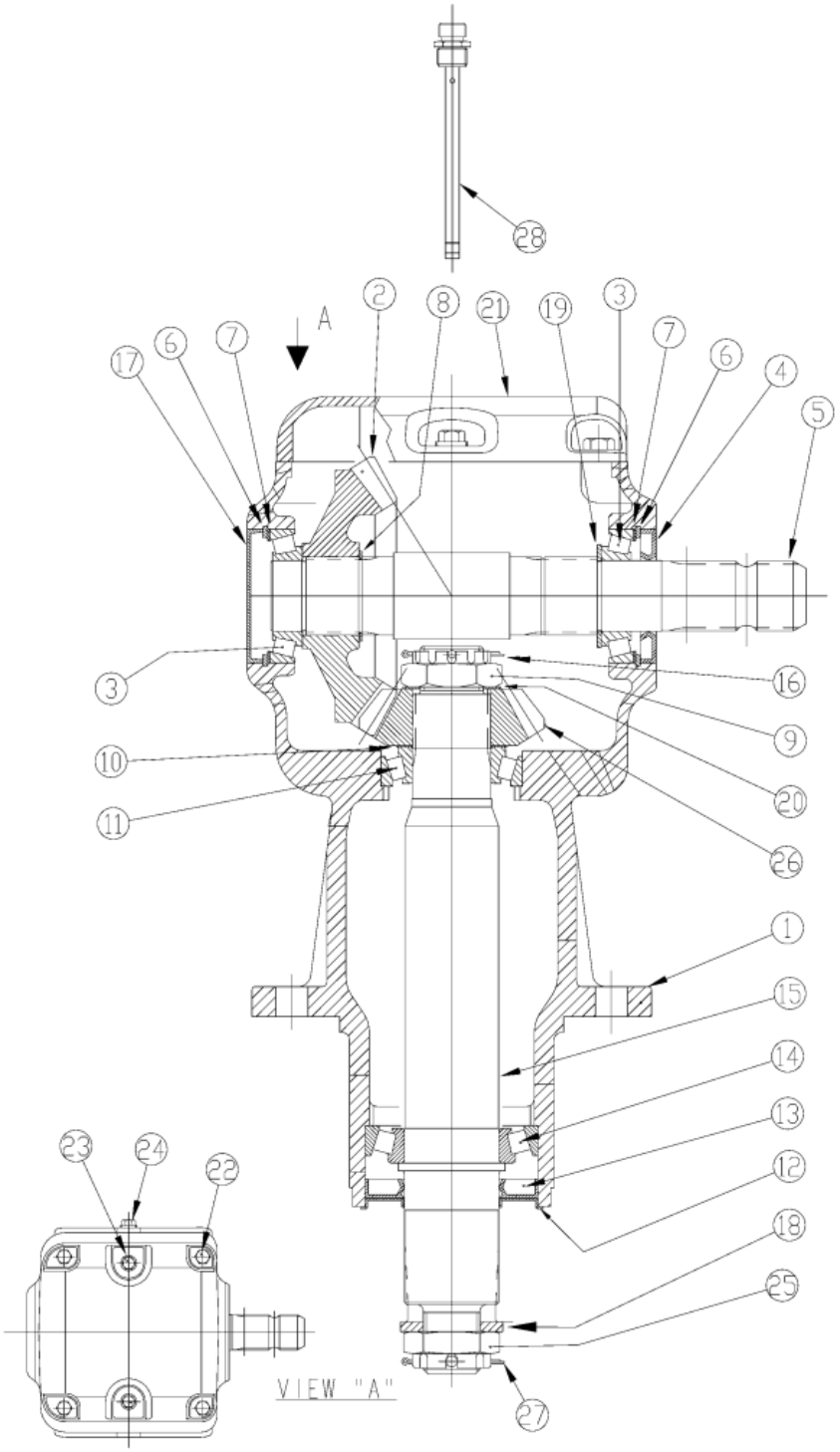

Gearbox (826-730C)

Applies to Models: RCB6615 S/N 944729-

Ref.	Part No.	Part Description	Comments
	DWG 33988	Drawing Image Number	
	826-730C	GBOX RC60 1:1.60 REV *	
1	U0.125.0532.00	CO HOUSING	
2	U0.125.6053.00	CO GEAR CROWN Z24 M7.25	
3	8.0.9.00143	CO BRG 30209 TAPERED	
4	8.7.1.02348	CO DUST LIP (45X85X10)	
4	8.7.3.00331	RPBY 8.7.1.02348	Obsolete
5	U0.125.2050.00	CO INPUT SHAFT 1 3/4"-20	
6	8.5.2.00332	CO SNAP RING UNI 7437	
7	A.709.500	COMER SHIM KIT	
8	8.5.1.00533	CO SNAP RING 50 UNI7435	
9	U0.125.7100.00	CO CASTLE NUT	
10	A.712.500	COMER SHIM KIT	
11	8.0.9.01090	CO BRG 32210 (50X90X24.75)	
12	1.181.7101.00	CO SEAL PROTECTOR	
13	8.7.1.02349	CO OIL SEAL 60X110X12 SL	
14	8.0.9.00079	CO BRG 30212 (60X110X23.75)	
15	U0.125.3003.00	CO OUTPUT SHAFT	
16	8.4.7.02265	CO COTTER PIN B 5X60	
17	0.121.7101.00	CO CAP	
18	0.288.7101.00	CO BLANK WASHER	
19	0.252.7525.00	CO SHIM 45.3X2.5	
20	0.285.7510.00	CO SHIM 40.3 X 61.7 X 1	
21	U0.125.1303.00	CO TOP COVER	
22	8.1.1.00501	CO BOLT M10X22 HHB	
23	8.6.5.00203	CO PLUG 1/2" GAS	
24	8.6.5.00006	CO OIL PLUG 3/8	
25	8.2.2.00560	CO CASTLE NUT M36X3	
26	U0.125.5053.00	CO GEAR PINION Z15 M7.25	
27	8.4.7.01045	CO COTTER PIN B6X70 SLD-SPRTLY	
28	826-486C	COMER U0.125.7003.00 DIPSTICK	

Gearbox (826-731C)

Applies to Models: RCBM6615 S/N 944729-

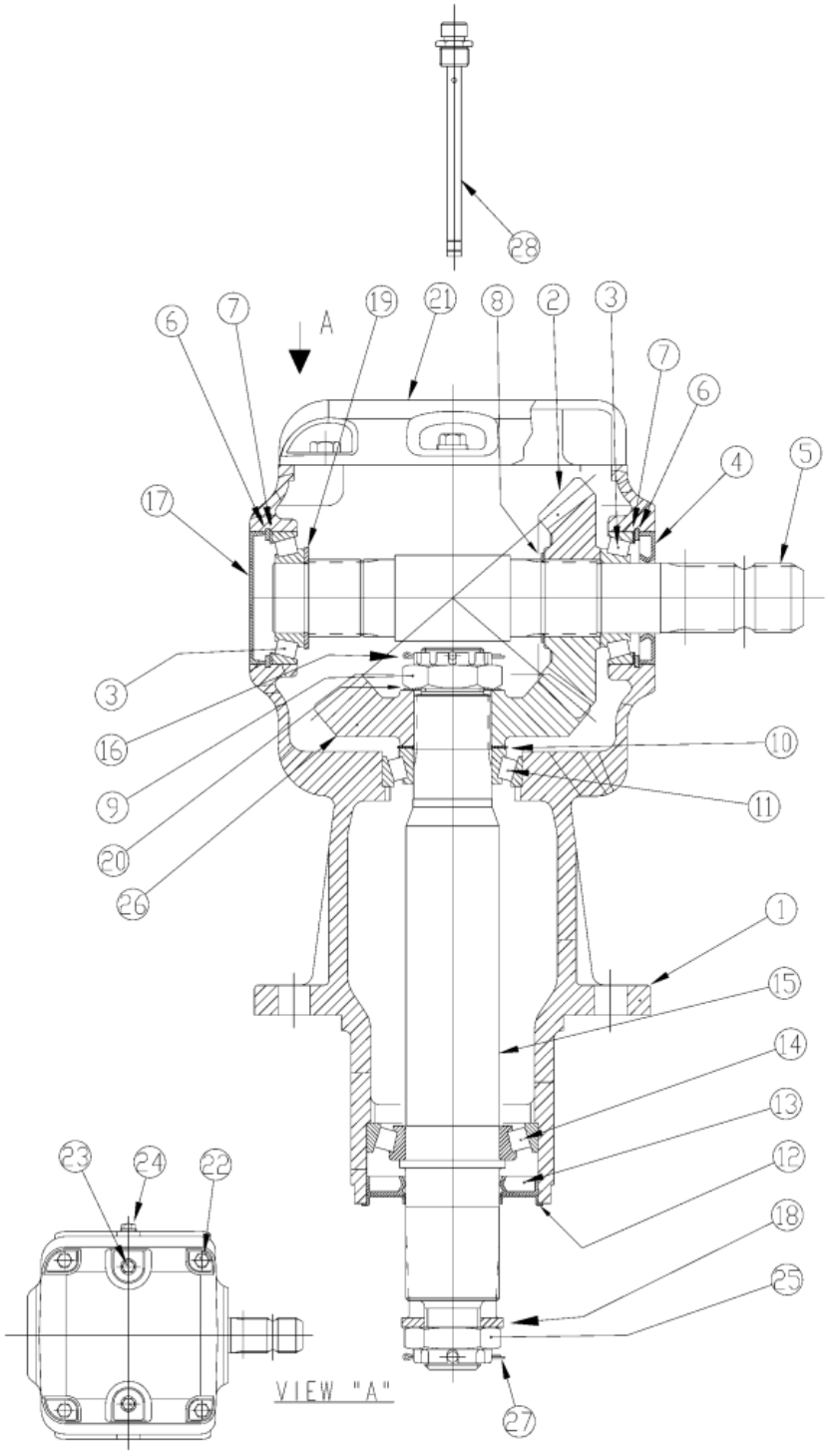

Gearbox (826-731C)

Applies to Models: RCBM6615 S/N 944729-

Ref.	Part No.	Part Description	Comments
	DWG 33989	Drawing Image Number	
	826-731C	GBOX RC60 1.15:1 STD *	(Obsolete) Obsolete
1	U0.125.0532.00	CO HOUSING	
2	U0.125.5061.00	CO GEAR PINION Z19 M7.8	
3	8.0.9.00143	CO BRG 30209 TAPERED	
4	8.7.1.02348	CO DUST LIP (45X85X10)	
4	8.7.3.00331	RPBY 8.7.1.02348	Obsolete
5	U0.125.2050.00	CO INPUT SHAFT 1 3/4"-20	
6	8.5.2.00332	CO SNAP RING UNI 7437	
7	A.709.500	COMER SHIM KIT	
8	8.5.1.00533	CO SNAP RING 50 UNI7435	
9	U0.125.7100.00	CO CASTLE NUT	
10	A.712.500	COMER SHIM KIT	
11	8.0.9.01090	CO BRG 32210 (50X90X24.75)	
12	1.181.7101.00	CO SEAL PROTECTOR	
13	8.7.1.02349	CO OIL SEAL 60X110X12 SL	
14	8.0.9.00079	CO BRG 30212 (60X110X23.75)	
15	U0.125.3003.00	CO OUTPUT SHAFT	
16	8.4.7.02265	CO COTTER PIN B 5X60	
17	0.121.7101.00	CO CAP	
18	0.288.7101.00	CO BLANK WASHER	
19	0.252.7525.00	CO SHIM 45.3X2.5	
20	0.285.7510.00	CO SHIM 40.3 X 61.7 X 1	
21	U0.125.1303.00	CO TOP COVER	
22	8.1.1.00501	CO BOLT M10X22 HHB	
23	8.6.5.00203	CO PLUG 1/2" GAS	
24	8.6.5.00006	CO OIL PLUG 3/8	
25	8.2.2.00560	CO CASTLE NUT M36X3	
26	U0.125.6061.00	CO GEAR CROWN Z22 M7.8	
27	8.4.7.01045	CO COTTER PIN B6X70 SLD-SPRTLY	
28	826-486C	COMER U0.125.7003.00 DIPSTICK	

Gearbox Divider (826-520C) Comer

Applies to Models: RCB6615 S/N 944729-

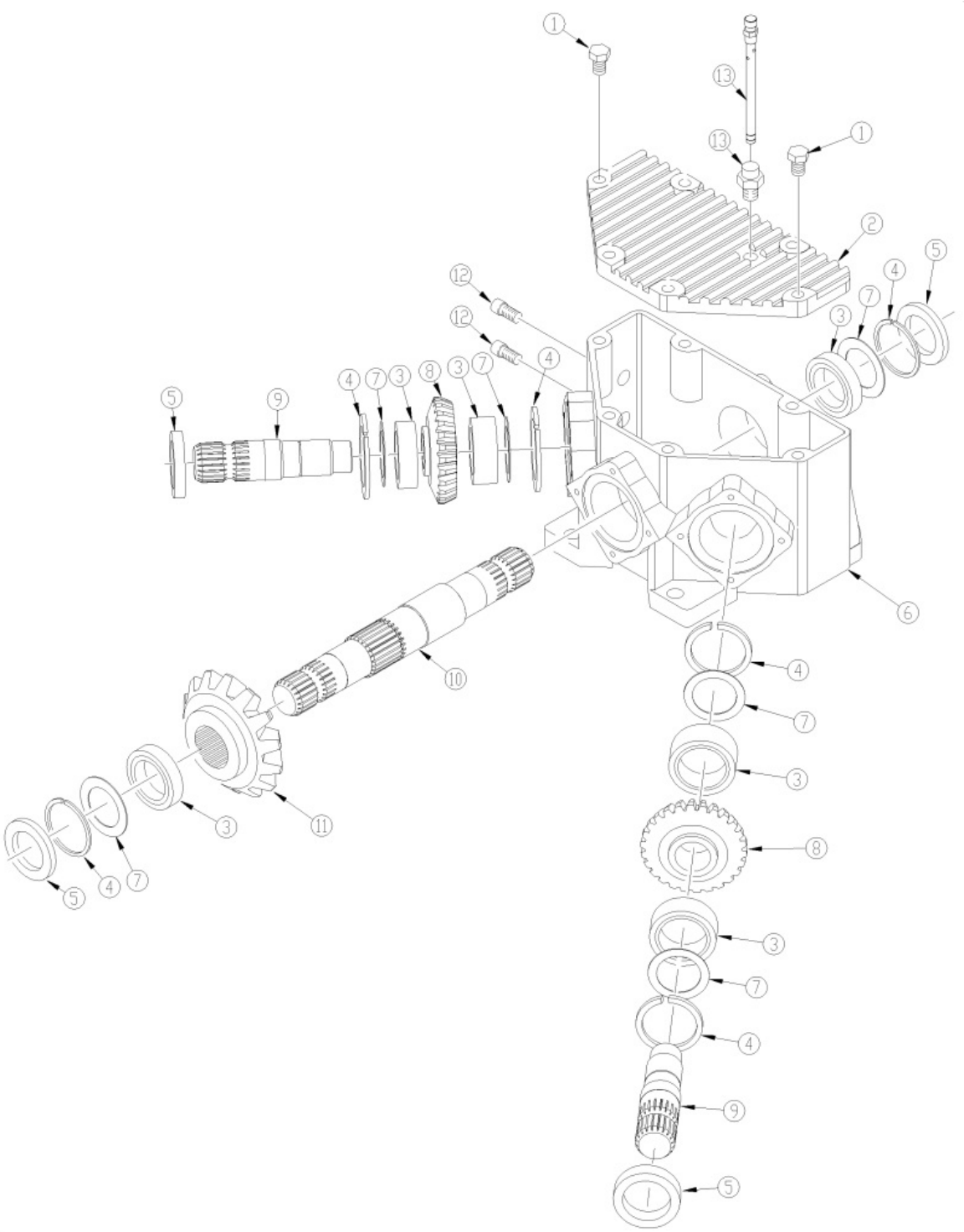

Gearbox Divider (826-520C) Comer

Applies to Models: RCB6615 S/N 944729-

Ref.	Part No.	Part Description	Comments
	DWG 26959	Image No.	
	826-520C	DIV BOX 540RPM 1 3/4-20 *	
1	8.1.1.00109	CO BOLT M10 X 35 8.8	
2	0.305.1300.00	TOP COVER PLATE	
3	8.0.9.00143	CO BRG 30209 TAPERED	Includes bearing and race
4	8.5.2.01772	CO SNAP RING	
5	8.7.1.02348	CO DUST LIP (45X85X10)	
5	8.7.3.00331	RPBY 8.7.1.02348	Obsolete
6	0.305.0300.01	CO CASING	
7	A.709.500	COMER SHIM KIT	
8	N/A	NOT AVAILABLE	Replaced by A.305.500
9	0.305.3000.00	CO SHAFT 1" 3/4 Z20	
10	0.305.2000.00	CO SHAFT 1" 3/4 Z20	
11	N/A	NOT AVAILABLE	Replaced by A.305.500
12	8.6.6.00201	CO PLUG 3/8 (SOLID PLUG)	
13	826-848C	COMER 0.340.7101.00 DIPSTICK	S/N 1011370+
13	826-497C	COMER VENT #8.6.7.00269	S/N 1011369-
14	A.305.500	CO TRIAD GEAR Z20-Z20-Z24 M6.5 *	Contains 2 of gear #8 and 1 of gear #11
		Notes: Oil Type 80-90W Capacity 5.5 Pints	

Gearbox Divider (826-521C) Comer

Applies to Models: RCBM6615 S/N 944729-

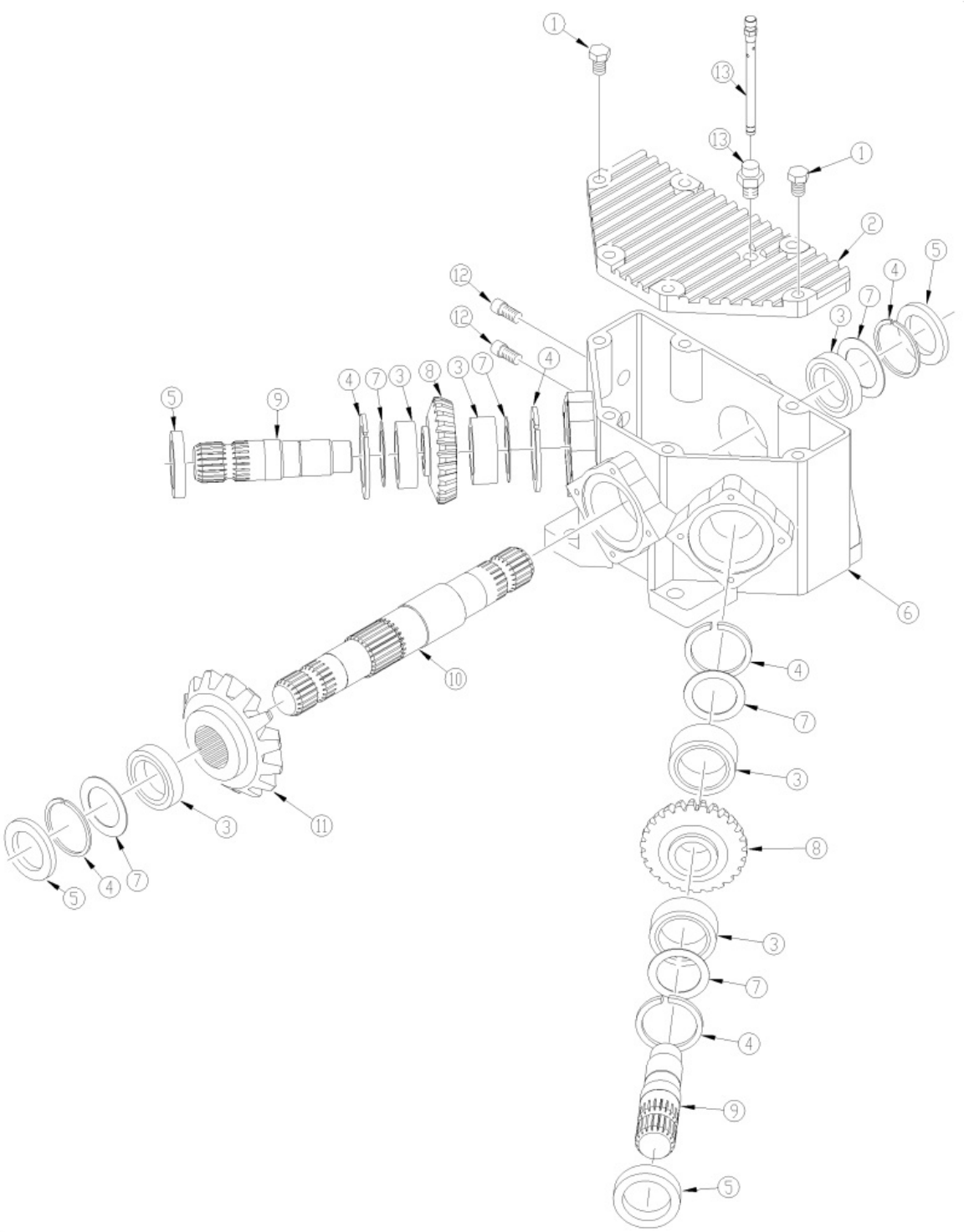

Gearbox Divider (826-521C) Comer

Applies to Models: RCBM6615 S/N 944729-

Ref.	Part No.	Part Description	Comments
	DWG 26960	Image No.	
	826-521C	DIV BOX 1000RPM 1 3/4-20 *	
1	8.1.1.00109	CO BOLT M10 X 35 8.8	
2	0.305.1300.00	TOP COVER PLATE	
3	8.0.9.00143	CO BRG 30209 TAPERED	
4	8.5.2.01772	CO SNAP RING	
5	8.7.1.02348	CO DUST LIP (45X85X10)	
5	8.7.3.00331	RPBY 8.7.1.02348	Obsolete
6	0.305.0300.01	CO CASING	
7	A.709.500	COMER SHIM KIT	
7	0.709.7500.00	RPBY A.709.500	Obsolete
8	N/A	NOT AVAILABLE	Replaced by A.305.501
9	0.305.3000.00	CO SHAFT 1" 3/4 Z20	
10	0.305.2000.00	CO SHAFT 1" 3/4 Z20	
11	N/A	NOT AVAILABLE	Replaced by A.305.501
12	8.6.6.00201	CO PLUG 3/8 (SOLID PLUG)	
13	826-848C	COMER 0.340.7101.00 DIPSTICK	S/N 1011370+
13	826-497C	COMER VENT #8.6.7.00269	S/N 1011369-
14	A.305.501	CO TRIAD GEAR Z20-Z24-Z24 M6.5 *	Contains 2 of gear #8 and 1 of gear #11
		Notes: Oil Type 80-90W Capacity 5.5 Pints	

Gearbox Divider 1000 RPM (826-521C) Omni

Applies to Models: RCBM6615 S/N 944729-

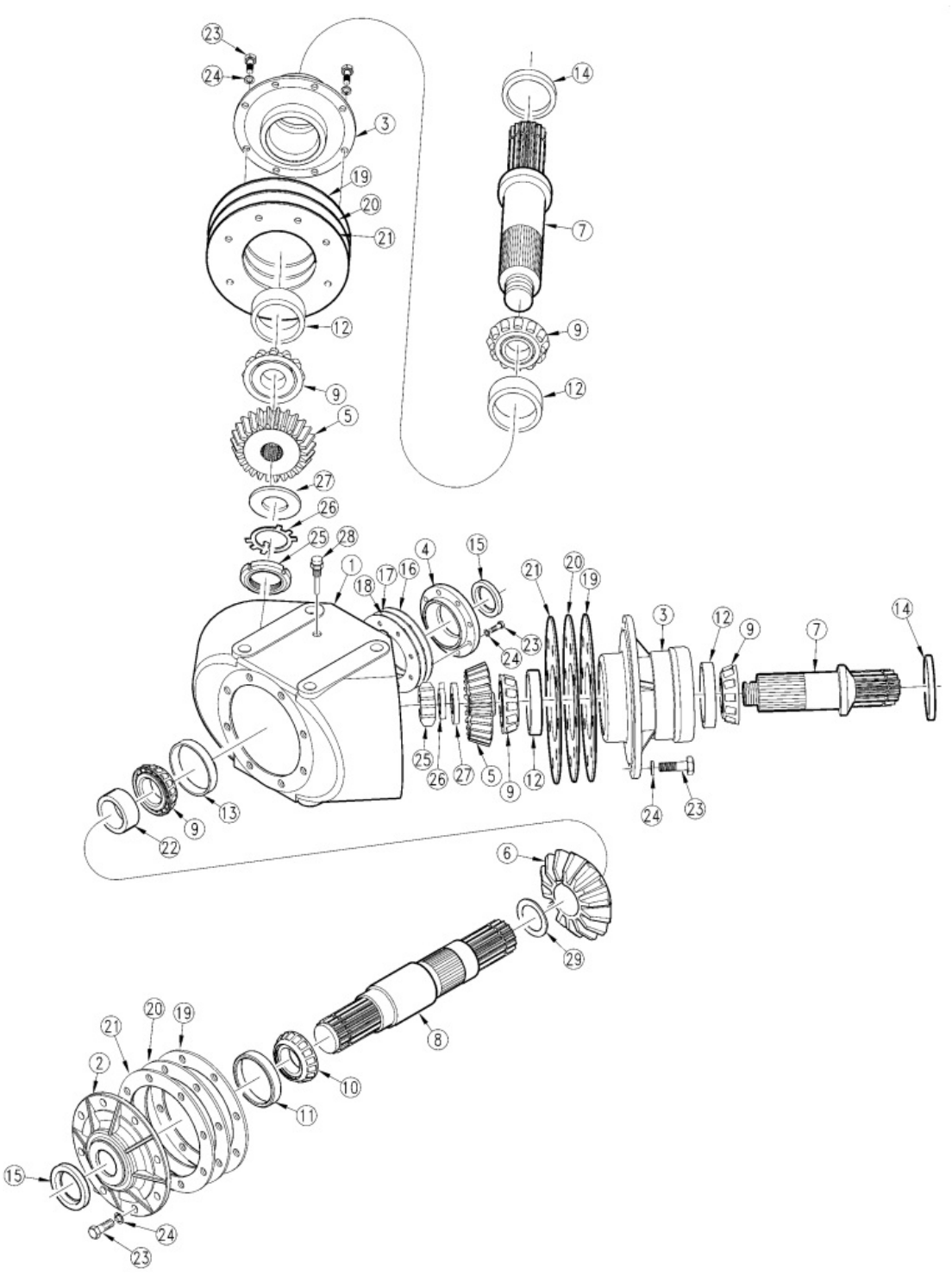

Gearbox Divider 1000 RPM (826-521C) Omni

Applies to Models: RCBM6615 S/N 944729-

Ref.	Part No.	Part Description	Comments
	DWG 26707	Drawing Image Number	
	826-521C	DIV BOX 1000RPM 1 3/4-20 *	
1	010063	OMNI HOUSING RCD101HD	
2	020162	OMNI INPUT CAP	
3	020061	OMIN CANTILEVERED OUTPUT CAP	
4	020110	OMNI OUTPUT CAP	
5	030194	OMNI GEAR, 26T	
6	030193	OMNI PINION, 20T	
7	040121	OMNI OUTPUT SHAFT,1.75-20SHORT	
8	040124	OMNI INPUT SHAFT, 1.75-20 LONG	
9	050008	OMNI BRG CONE - 368	
10	050012	OMNI BRG CONE -LM603049	
11	050013	OMNI BRG CUP - LM 603014	
12	050014	BRG CUP - 362A, OMNI	
13	050015	BRG CUP - 362, OMNI	
14	060020	OMNI OUTPUT SEAL	
15	060051	RPBY 05-007	
16	070057	OMNI GASKET, 0.30MM	
17	070058	OMNI GASKET, 0.15MM	
18	070151	OMNI INPUT GASKET, 0.10MM	
19	070140	OMNI GASKET 0.30MM	
20	070141	OMNI GASKET 0.15MM	
21	070142	OMNI GASKET 0.10MM	
22	090003	SPACER, OMNI	
23	802-079C	HHCS 3/8-16X1 1/4 GR5	
24	804-013C	WASHER LOCK SPRING 3/8 PLT	
25	120025	OMNI LOCKNUT, TN-06	
26	130030	OMNI LOCKWASHER, TW-06	
27	130021	OMNI FLAT WASHER	
28	140046	OMNI LEVEL PLUG 1/2-14NPT,PRW	
29	200003	OMNI RETAINING RING *	
		Notes: Oil Type 80-90W Capacity 5.5 Pints	

Gearbox Divider 540 RPM (826-520C) Omni

Applies to Models: RCB6615 S/N 944729-

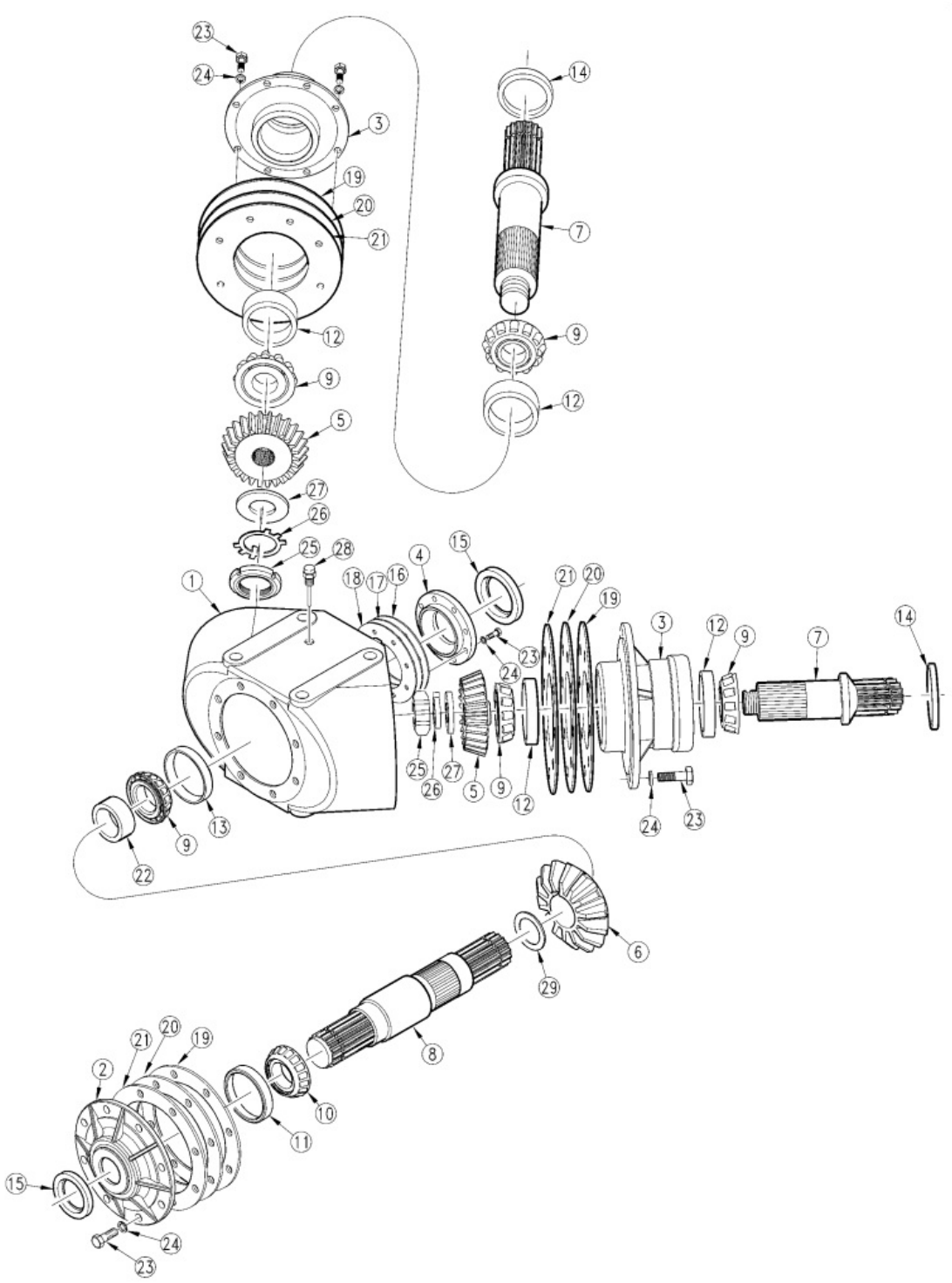

Gearbox Divider 540 RPM (826-520C) Omni

Applies to Models: RCB6615 S/N 944729-

Ref.	Part No.	Part Description	Comments
	DWG 26706	Drawing Image Number	
	826-520C	DIV BOX 540RPM 1 3/4-20 *	
1	010063	OMNI HOUSING RCD101HD	
2	020162	OMNI INPUT CAP	
3	020061	OMIN CANTILEVERED OUTPUT CAP	
4	020110	OMNI OUTPUT CAP	
5	030413	OMNI PINION, 20T	
6	030412	OMNI GEAR, 24T	
7	040121	OMNI OUTPUT SHAFT,1.75-20SHORT	
8	040124	OMNI INPUT SHAFT, 1.75-20 LONG	
9	050008	OMNI BRG CONE - 368	
10	050012	OMNI BRG CONE -LM603049	
11	050013	OMNI BRG CUP - LM 603014	
12	050014	BRG CUP - 362A, OMNI	
13	050015	BRG CUP - 362, OMNI	
14	060020	OMNI OUTPUT SEAL	
15	060051	RPBY 05-007	
16	070057	OMNI GASKET, 0.30MM	
17	070058	OMNI GASKET, 0.15MM	
18	070151	OMNI INPUT GASKET, 0.10MM	
19	070140	OMNI GASKET 0.30MM	
20	070141	OMNI GASKET 0.15MM	
21	070142	OMNI GASKET 0.10MM	
22	090003	SPACER, OMNI	
23	802-079C	HHCS 3/8-16X1 1/4 GR5	
24	804-013C	WASHER LOCK SPRING 3/8 PLT	
25	120025	OMNI LOCKNUT, TN-06	
26	130030	OMNI LOCKWASHER, TW-06	
27	130021	OMNI FLAT WASHER	
28	140046	OMNI LEVEL PLUG 1/2-14NPT,PRW	
29	200003	OMNI RETAINING RING *	
		Notes: Oil Type 80-90W Capacity 5.5 Pints	

Hydraulic Cylinder (810-175C) Midway

Applies to Models: RCBM6615 S/N 944729-, RCB6615 S/N 944729-

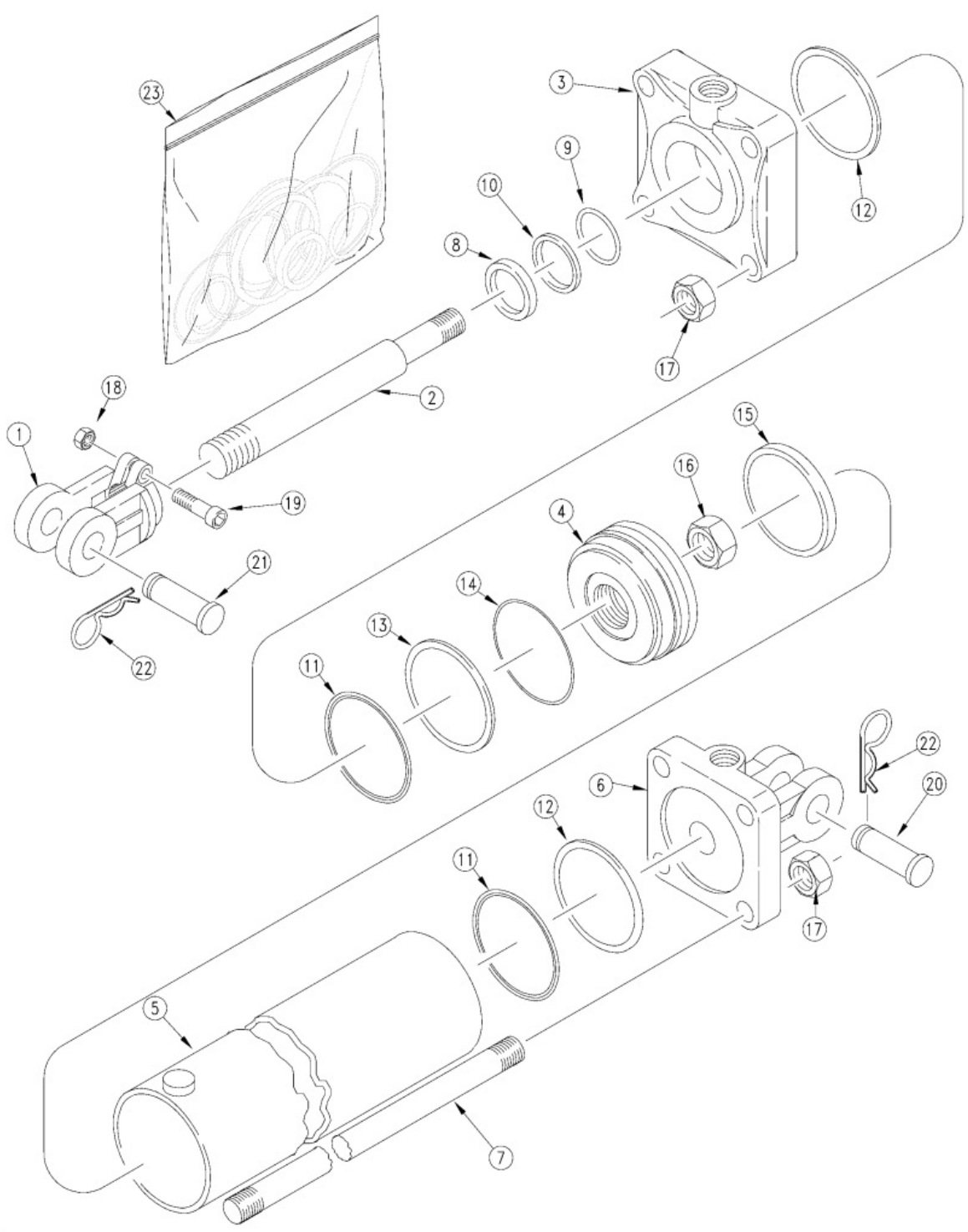

Hydraulic Cylinder (810-175C) Midway

Applies to Models: RCBM6615 S/N 944729-, RCB6615 S/N 944729-

Ref.	Part No.	Part Description	Comments
	DWG 10846	Drawing Image Number	
	810-175C	CYL REP 3.5X8X1.25 ROD (TIE) *	Complete assembly
1	1M6010-ADI	MIDWAY HARDENED CLEVIS ADI	
2	2M5416	MIDWAY ROD	
3	3R3412	MW HEAD	
4	4R3109	PISTON MIDWAY	
4	4R3106	RPBY 4R3109 & NEW TUBE	Obsolete
5	5R3116	TUBE MIDWAY	
6	6R3164-ADI	MIDWAY ADI BASE	
7	7M5316	MW TIE ROD	
8	N/A	NOT AVAILABLE	Only available in Seal Kit #23
9	N/A	NOT AVAILABLE	Only available in Seal Kit #23
10	N/A	NOT AVAILABLE	Only available in Seal Kit #23
11	N/A	NOT AVAILABLE	Only available in Seal Kit #23
12	N/A	NOT AVAILABLE	Only available in Seal Kit #23
13	N/A	NOT AVAILABLE	Only available in Seal Kit #23
14	N/A	NOT AVAILABLE	Only available in Seal Kit #23
15	N/A	NOT AVAILABLE	Only available in Seal Kit #23
16	2A0024	MW PISTON NUT 1-14	
17	2A0016	MW TIE ROD NUT	
18	803-234C	NUT HEX 3/8-16 PLAIN	
19	802-023C	HHCS 3/8-16X1 3/4 GR5	
20	805-124C	PIN CLVS 1.0X3.69 USBL GR5	
21	805-124C	PIN CLVS 1.0X3.69 USBL GR5	
22	2A0132	MW PIN CLIP	
23	810-174C	SEAL KIT MW 3.5 RPHCYL 4A3104	

Hydraulic Cylinder (810-176C) Midway

Applies to Models: RCBM6615 S/N 944729-, RCB6615 S/N 944729-

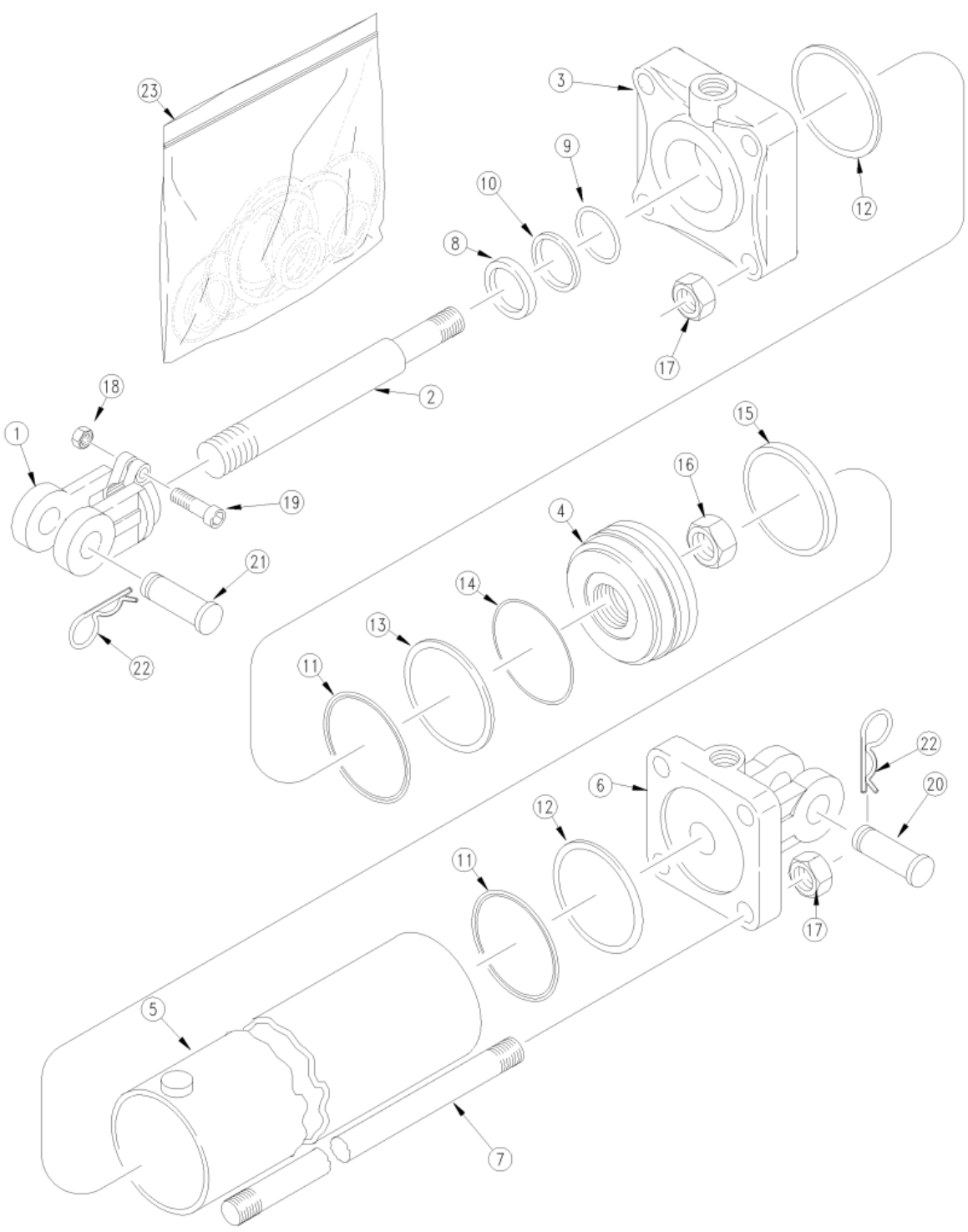

Hydraulic Cylinder (810-176C) Midway

Applies to Models: RCBM6615 S/N 944729-, RCB6615 S/N 944729-

Ref.	Part No.	Part Description	Comments
	DWG 78304	Drawing Image Number	
	810-176C	CYL REP 3.25X8X1.25 ROD (TIE) *	Complete assembly
1	1M6010-ADI	MIDWAY HARDENED CLEVIS ADI	
2	2M5416	MIDWAY ROD	
3	3R2440	MW HEAD	
3	3R2412	REPL BY 3R2440	Obsolete
4	4R2109	PISTON MIDWAY	
4	4R2106	RPBY 4R2109 & NEW TUBE	Obsolete
5	5R2116	TUBE MIDWAY	
6	6R2164-ADI	MIDWAY ADI BASE	
7	7M5316	MW TIE ROD	
8	N/A	NOT AVAILABLE	Only available in Seal Kit #23
9	N/A	NOT AVAILABLE	Only available in Seal Kit #23
10	N/A	NOT AVAILABLE	Only available in Seal Kit #23
11	N/A	NOT AVAILABLE	Only available in Seal Kit #23
12	N/A	NOT AVAILABLE	Only available in Seal Kit #23
13	N/A	NOT AVAILABLE	Only available in Seal Kit #23
14	N/A	NOT AVAILABLE	Only available in Seal Kit #23
15	N/A	NOT AVAILABLE	Only available in Seal Kit #23
16	2A0024	MW PISTON NUT 1-14	
17	2A0016	MW TIE ROD NUT	
18	803-234C	NUT HEX 3/8-16 PLAIN	
19	802-023C	HHCS 3/8-16X1 3/4 GR5	
20	805-124C	PIN CLVS 1.0X3.69 USBL GR5	
21	805-124C	PIN CLVS 1.0X3.69 USBL GR5	
22	2A0132	MW PIN CLIP	
23	810-173C	SEAL KIT MW 3.25 RPHCYL 4A2104	

Hydraulic Cylinder (810-632C) Red Lion

Applies to Models: RCBM6615 S/N 944729-, RCB6615 S/N 944729-

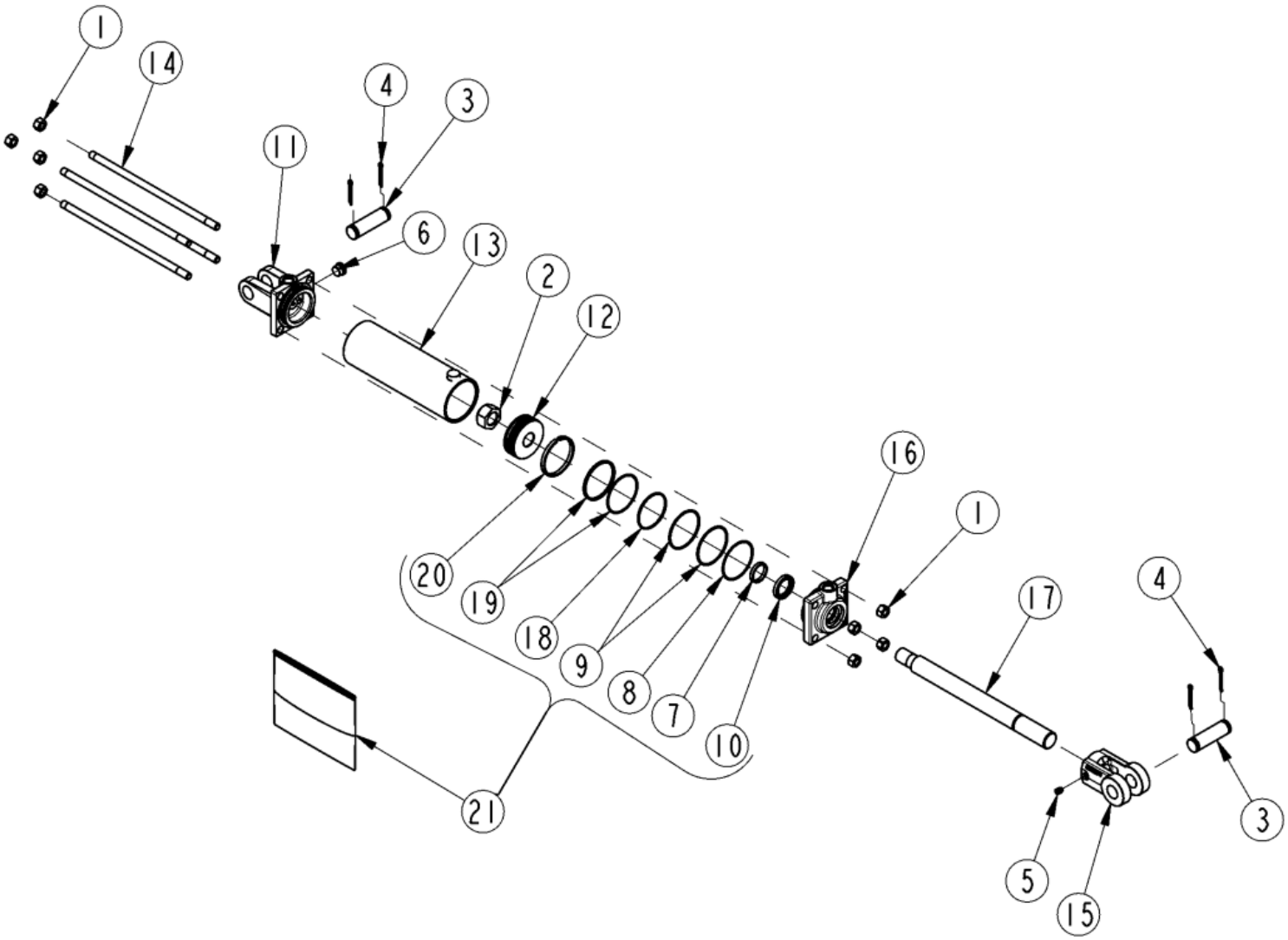

Hydraulic Cylinder (810-632C) Red Lion

Applies to Models: RCBM6615 S/N 944729-, RCB6615 S/N 944729-

Ref.	Part No.	Part Description	Comments
	DWG 27884	Drawing Image Number	
	810-632C	REP CYL 3X8X1.25 ROD (TIE) *	Complete assembly
1	803-020C	NUT HEX 1/2-13 PLT	
2	130560	MON PISTON NUT	
3	134953	LION PIN	
4	135995	MON CLEVIS PIN COTTER	
5	801-023C	SCREW SET SH 3/8-16X3/8 TYPE C	
6	186562	LION PLUG 3/4-16UNF SOCKET HD	
7	N/A	NOT AVAILABLE	Only available in Seal Kit #21
8	N/A	NOT AVAILABLE	Only available in Seal Kit #21
9	N/A	NOT AVAILABLE	Only available in Seal Kit #21
10	N/A	NOT AVAILABLE	Only available in Seal Kit #21
11	292675	MON CLEVIS CAP	
12	294719	MON PISTON	
13	464265	MON TUBE	
14	492278	MON TIE ROD	
15	492652	LION ROD CLEVIS 1 1/4 (1PIN)	
16	492670	MON ROD CAP	
17	492700	LION ROD 1.25 DIA. ASAE 8	
18	N/A	NOT AVAILABLE	Only available in Seal Kit #21
19	N/A	NOT AVAILABLE	Only available in Seal Kit #21
20	N/A	NOT AVAILABLE	Only available in Seal Kit #21
21	639558	MON REPAIR KIT	

Hydraulic Cylinder (810-671C) Red Lion

Applies to Models: RCBM6615 S/N 944729-, RCB6615 S/N 944729-

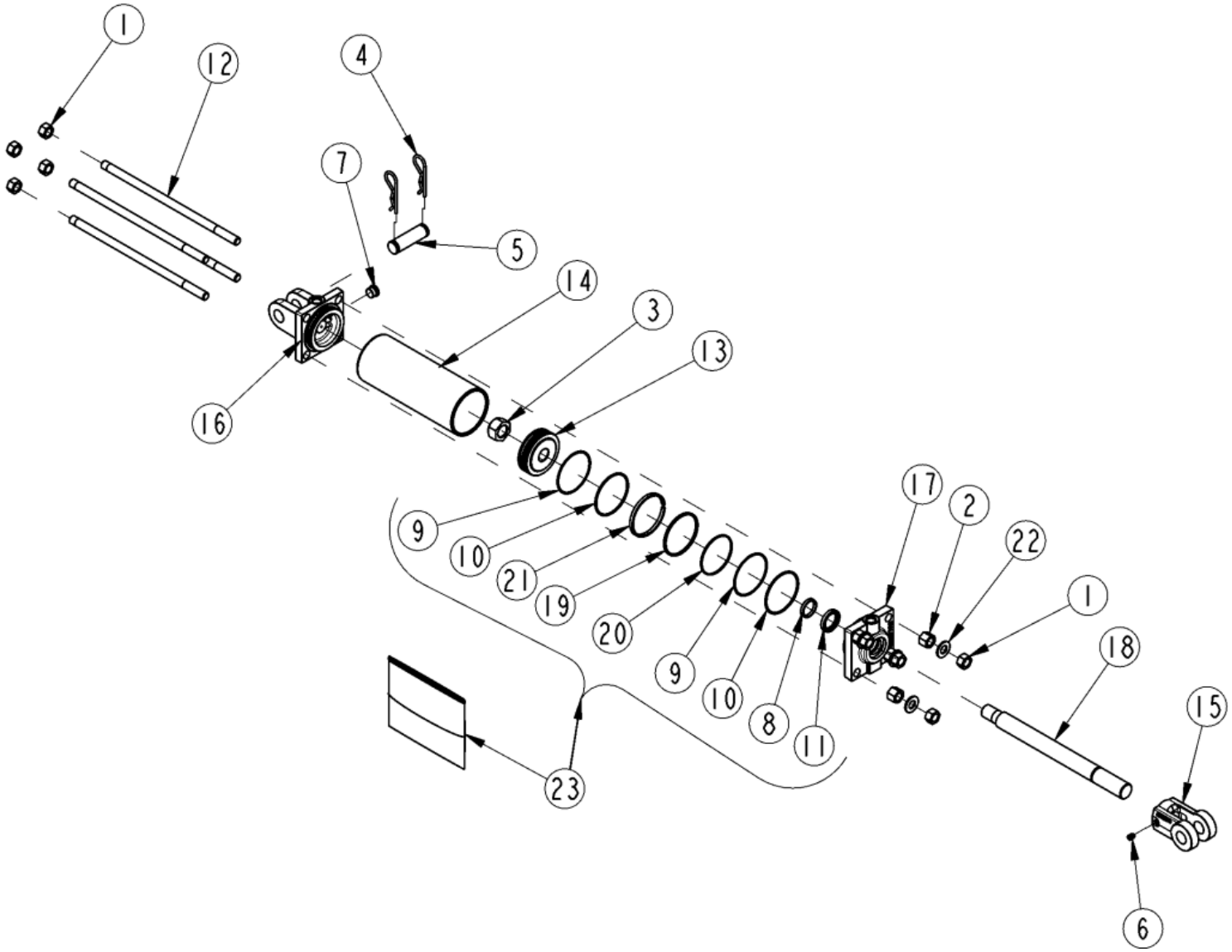

Hydraulic Cylinder (810-671C) Red Lion

Applies to Models: RCBM6615 S/N 944729-, RCB6615 S/N 944729-

Ref.	Part No.	Part Description	Comments
	DWG 27885	Drawing Image Number	
	810-671C	CYL 3.5X8X1.25 ROD (TIE ROD) *	Complete assembly
1	803-022C	NUT HEX 5/8-18 PLT	
2	128300	MON TIE ROD NUT (LONG)	
3	130560	MON PISTON NUT	
4	134950	MON R-CLIP RETAINERS	
5	134953	LION PIN	
6	801-023C	SCREW SET SH 3/8-16X3/8 TYPE C	
7	186562	LION PLUG 3/4-16UNF SOCKET HD	
8	N/A	NOT AVAILABLE	Only available in Seal Kit #23
9	N/A	NOT AVAILABLE	Only available in Seal Kit #23
10	N/A	NOT AVAILABLE	Only available in Seal Kit #23
11	N/A	NOT AVAILABLE	Only available in Seal Kit #23
12	294028	MON TIE ROD	
13	294738	PISTON, 3.5 CYLINDER	
14	491798	LION CYL. TUBE 3.5 X 8	
15	492652	LION ROD CLEVIS 1 1/4 (1PIN)	
16	492676	LION CLEVIS CAP 3.5 ORB	
17	492677	LION ROD CAP 3.5 X 1 1/4 ORB	
18	492700	LION ROD 1.25 DIA. ASAE 8	
19	N/A	NOT AVAILABLE	Only available in Seal Kit #23
20	N/A	NOT AVAILABLE	Only available in Seal Kit #23
21	N/A	NOT AVAILABLE	Only available in Seal Kit #23
22	804-021C	WASHER FLAT 5/8 SAE PLT	
23	810-885C	MON SEAL KIT 620279	
23	639561	RPBY 810-885C	Obsolete

Hydraulic Cylinder (810-830C) Red Lion

Applies to Models: RCBM6615 S/N 944729-, RCB6615 S/N 944729-

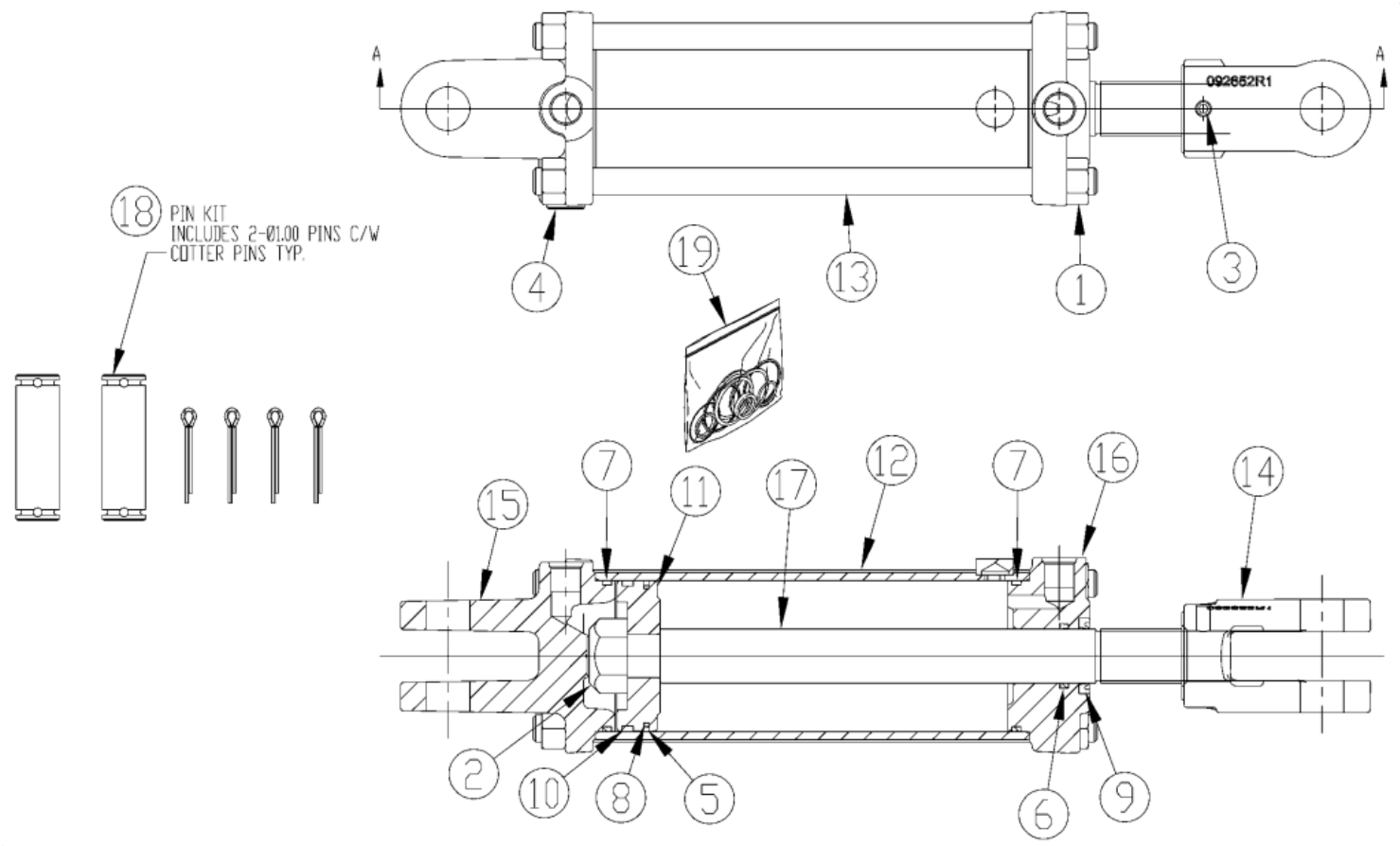

Hydraulic Cylinder (810-830C) Red Lion

Applies to Models: RCBM6615 S/N 944729-, RCB6615 S/N 944729-

Ref.	Part No.	Part Description	Comments
	DWG 33229	Drawing Image Number	
	810-830C	CYL REP 3.5X8X1.25 ROD (TIE) *	Complete assembly
1	803-022C	NUT HEX 5/8-18 PLT	
2	130560	MON PISTON NUT	
3	148202	MON SET SCREW	
3	148000	RPBY 148202	Obsolete
4	186562	LION PLUG 3/4-16UNF SOCKET HD	
5	N/A	NOT AVAILABLE	Only available in seal kit #19
6	N/A	NOT AVAILABLE	Only available in seal kit #19
7	N/A	NOT AVAILABLE	Only available in seal kit #19
8	N/A	NOT AVAILABLE	Only available in seal kit #19
9	N/A	NOT AVAILABLE	Only available in seal kit #19
10	N/A	NOT AVAILABLE	Only available in seal kit #19
11	294738	PISTON, 3.5 CYLINDER	
12	464267	MON TUBE WELDT 3.50-08.00-TP	
13	492338	LION TIE ROD 5/8 X 8	
14	492652	LION ROD CLEVIS 1 1/4 (1PIN)	
15	492676	LION CLEVIS CAP 3.5 ORB	
16	492677	LION ROD CAP 3.5 X 1 1/4 ORB	
17	492700	LION ROD 1.25 DIA. ASAE 8	
18	235005	MON PIN KIT 1.00C/W COTTER PIN	
19	810-885C	MON SEAL KIT 620279	
19	639561	RPBY 810-885C	Obsolete

Hydraulic Cylinder (810-831C) Red Lion

Applies to Models: RCBM6615 S/N 944729-, RCB6615 S/N 944729-

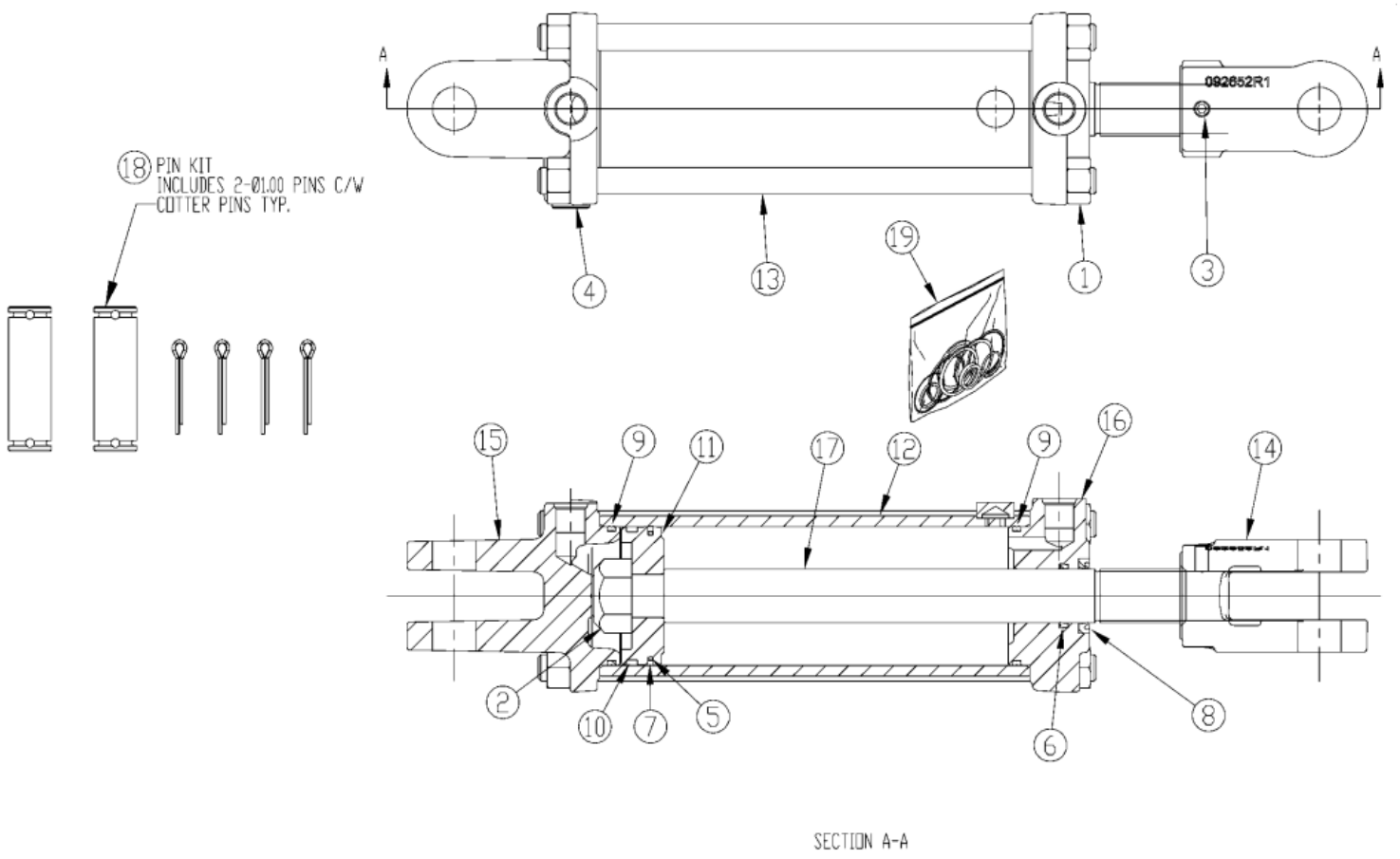

Hydraulic Cylinder (810-831C) Red Lion

Applies to Models: RCBM6615 S/N 944729-, RCB6615 S/N 944729-

Ref.	Part No.	Part Description	Comments
	DWG 33230	Drawing Image Number	
	810-831C	CYL REP 3.25X8X1.25 ROD (TIE) *	Complete assembly
1	803-022C	NUT HEX 5/8-18 PLT	
2	130560	MON PISTON NUT	
3	148202	MON SET SCREW	
3	148000	RPBY 148202	Obsolete
4	186562	LION PLUG 3/4-16UNF SOCKET HD	
5	N/A	NOT AVAILABLE	Only available in Seal Kit #19
6	N/A	NOT AVAILABLE	Only available in Seal Kit #19
7	N/A	NOT AVAILABLE	Only available in Seal Kit #19
8	N/A	NOT AVAILABLE	Only available in Seal Kit #19
9	N/A	NOT AVAILABLE	Only available in Seal Kit #19
10	N/A	NOT AVAILABLE	Only available in Seal Kit #19
11	294737	MON PISTON 3.25-1.00-TP	
12	464266	MON TUBE WELDT 3.25-08.00-TP	
13	492338	LION TIE ROD 5/8 X 8	
14	492652	LION ROD CLEVIS 1 1/4 (1PIN)	
15	492662	MON CLEVIS CAP 3.25-3/4ORB-1.0	
16	492664	MON ROD CAP 3.25-1.25-3/4ORB	
17	492700	LION ROD 1.25 DIA. ASAE 8	
18	235005	MON PIN KIT 1.00C/W COTTER PIN	
19	639560	MON SEAL KIT 32TP08-125	

Hydraulic Cylinder Plumbing Components

Applies to Models: RCBM6615 S/N 944729-, RCB6615 S/N 944729-

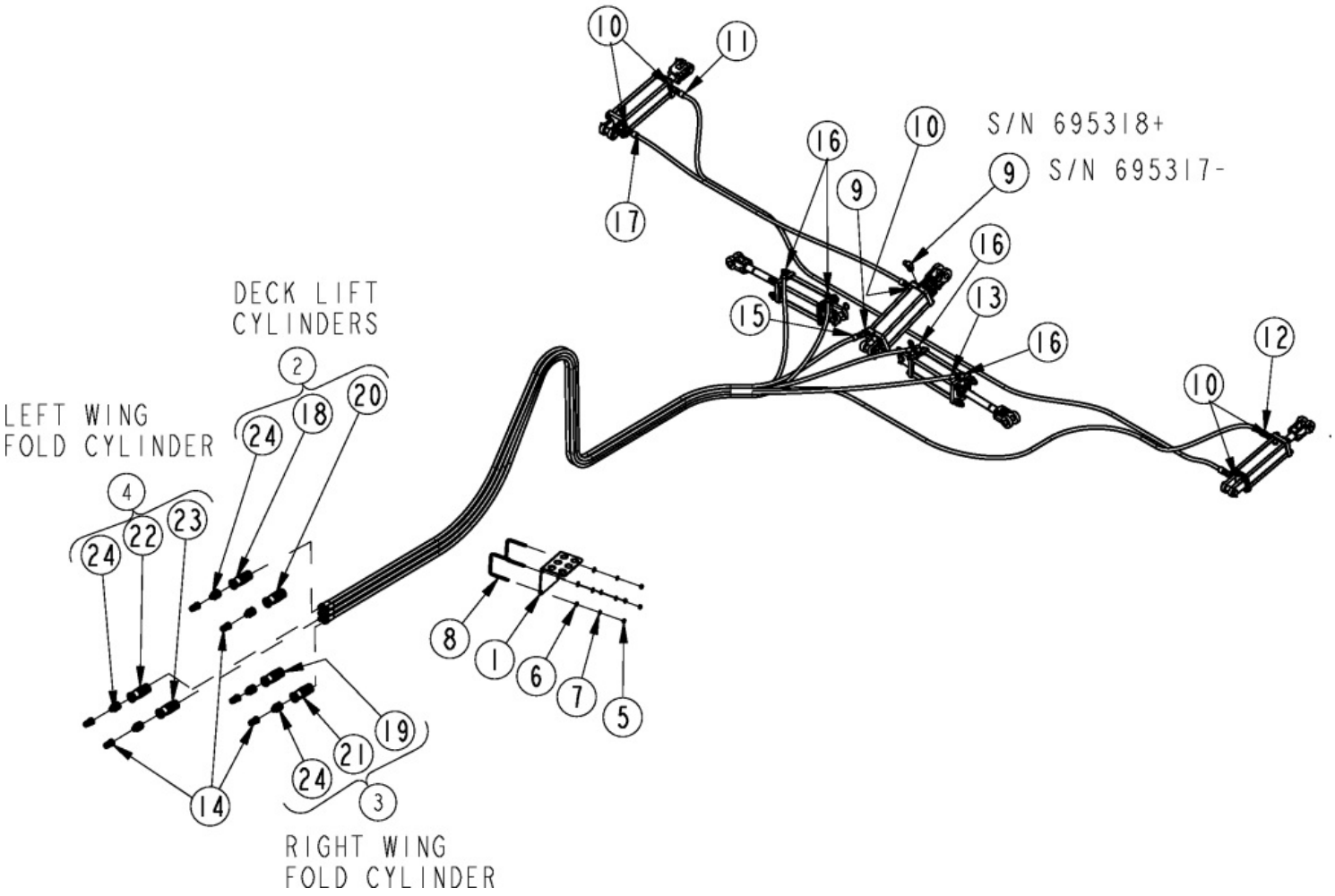

Hydraulic Cylinder Plumbing Components

Applies to Models: RCBM6615 S/N 944729-, RCB6615 S/N 944729-

Ref.	Part No.	Part Description	Comments
	DWG27844	Drawing Image Number	
1	330-836D	BOLT ON HOSE HOLDER	S/N 797272+
2	548-001S	HG PAIR - BLACK MORB-FORB	S/N 797272+ Black Lift Cylinder
3	548-002S	HG PAIR - RED MORB-FORB	S/N 797272+ Right Wing Cylinder
4	548-004S	HG PAIR - YELLOW MORB-FORB	S/N 797272+ Left Wing Cylinder
5	803-014C	NUT HEX 3/8-16 PLT	S/N 797272+
6	804-012C	WASHER FLAT 3/8 SAE PLT	S/N 797272+
7	804-013C	WASHER LOCK SPRING 3/8 PLT	S/N 797272+
8	806-138C	U-BOLT 3/8-16 X 4 1/32 X 3 3/4	S/N 797272+
9	811-063C	EL 3/4MJIC 3/4MORB	
10	811-088C	AD 3/4MORB 3/4MJIC	
11	811-094C	HH3/8R1 176 3/4FJIC	
12	811-101C	HH3/8R1 249 3/4FJIC 3/4MORB	
13	811-238C	HH3/8R1 189 9/16FJIC 3/4MORB	
14	811-394C	CP 3/4FORB MALE QD POPPET TYPE	
15	811-619C	HH3/8R1 168 3/4MORB 3/4FJIC	
16	841-284C	OREL 1/16 9/16MJIC 3/4MORB	
17	841-308C	1.2/8R1 084 3/4FJIC	
18	811-826C	HG HANDLE - BLACK EXT	S/N 797272+
19	811-827C	HG HANDLE - RED RET	S/N 797272+
20	811-913C	HG HANDLE - BLACK RET	S/N 797272+
21	811-914C	HG HANDLE - RED EXT	S/N 797272+
22	811-917C	HG HANDLE - YELLOW EXT	S/N 797272+
23	811-918C	HG HANDLE - YELLOW RET	S/N 797272+
24	811-919C	AD 3/4MORB 3/4FORB (HG)	S/N 797272+

Hydraulic Cylinders W/ Mounting Components

Applies to Models: RCBM6615 S/N 944729-, RCB6615 S/N 944729-

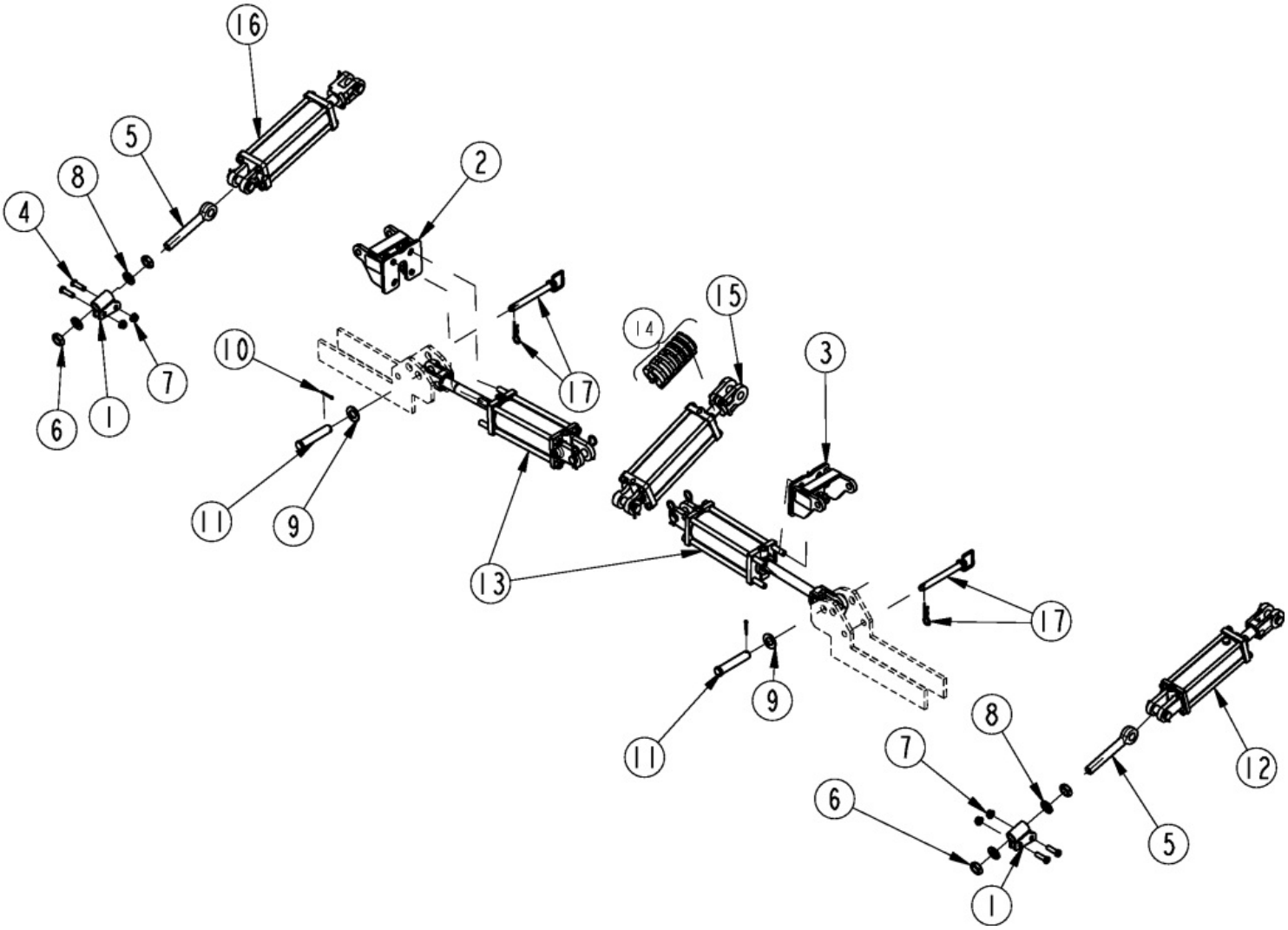

Hydraulic Cylinders W/ Mounting Components

Applies to Models: RCBM6615 S/N 944729-, RCB6615 S/N 944729-

Ref.	Part No.	Part Description	Comments
	DWG27848	Drawing Image Number	
1	330-230H	MOUNT TANDEM ADJ	
2	330-587S	TRANSPORT LOCK RH DUAL	
3	330-588S	TRANSPORT LOCK LH DUAL	
4	802-082C	HHCS 1/2-13X1 3/4 GR5 FTHD	
5	802-754C	EYE BOLT 1-8X7 1/2 LG PLT SP	
6	803-030C	NUT HEX JAM 1-8 PLT	
7	803-037C	NUT HEX WHIZ 1/2-13 PLT GR5	
8	804-027C	WASHER LOCK SPRING 1 PLT	
9	804-029C	WASHER FLAT 1 SAE	
10	805-104C	PIN COTTER 3/16 X 1 1/2 PLT	
11	805-131C	PIN CLVS 1.0X4.69 USBL	
12	810-632C	REP CYL 3X8X1.25 ROD (TIE)	
13	810-671C	CYL 3.5X8X1.25 ROD (TIE ROD)	
14	810-818C	STRK CNTRL SPCRS 1.125 TO 1.50	
15	810-830C	CYL REP 3.5X8X1.25 ROD (TIE)	S/N 695256+
15	810-175C	CYL REP 3.5X8X1.25 ROD (TIE)	S/N 695255- When Reording Complete Cylinder Order 810-830C
16	810-831C	CYL REP 3.25X8X1.25 ROD (TIE)	S/N 695256+
16	810-176C	CYL REP 3.25X8X1.25 ROD (TIE)	S/N 695255- When Reording Complete Cylinder Order 810-831C
17	805-425C	PIN HTCH .75X6.25 USBL W/PIN	

Decal Placement

Applies to Models: RCBM6615 S/N 944729-, RCB6615 S/N 944729-

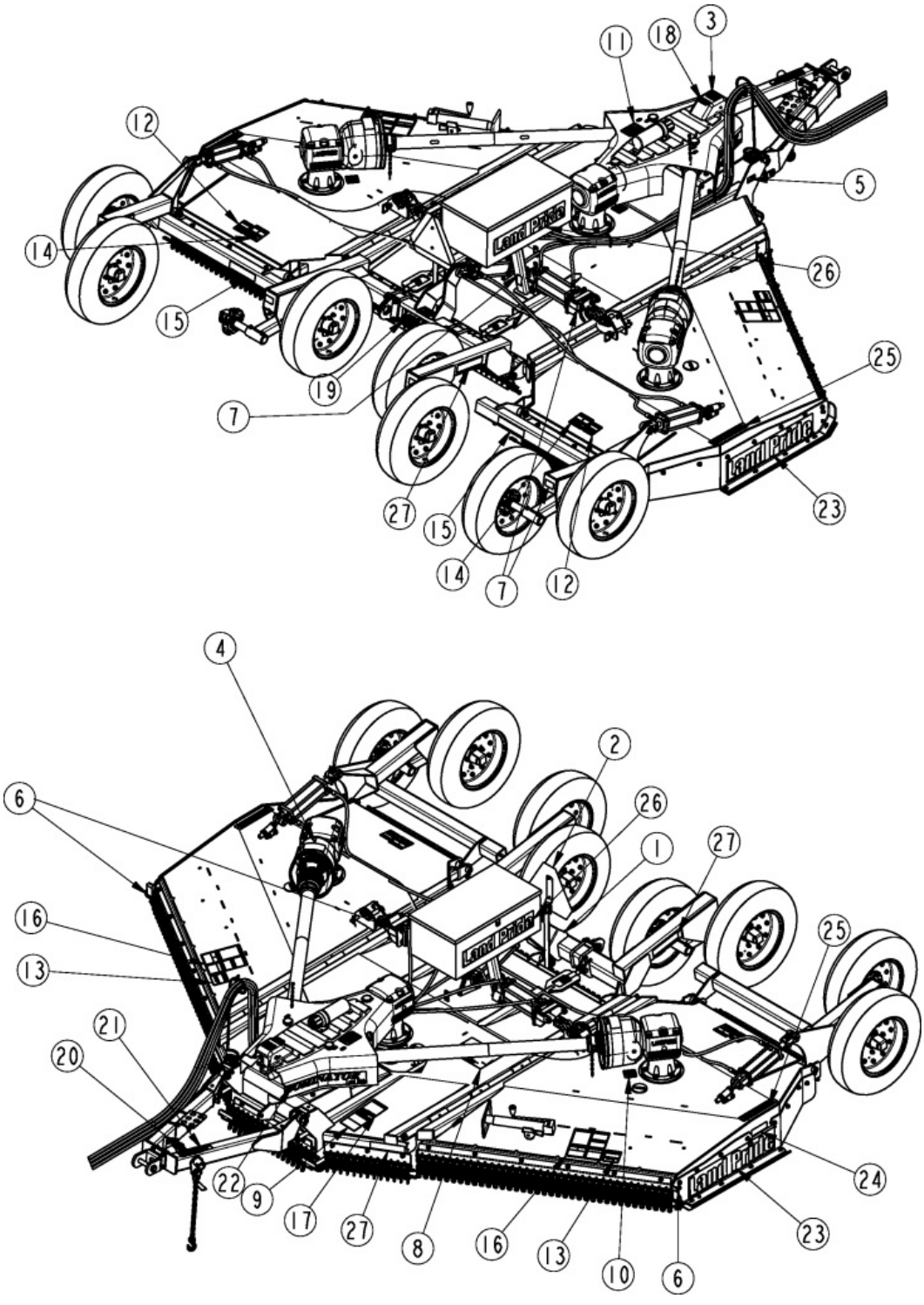

Decal Placement

Applies to Models: RCBM6615 S/N 944729-, RCB6615 S/N 944729-

Ref.	Part No.	Part Description	Comments
	DWG 27846	Drawing Image Number	
1	818-045C	DECAL WARNING PINCH PT/CRUSH	
2	818-055C	DECAL SLOW MOVING-GALV. BACKED	
3	818-130C	DECAL WARNING 540 RPM	
3	818-240C	DECAL WARNING 1000 RPM	
4	818-142C	DECAL DANGER PTO DRIVELINE EN	
5			
6	818-229C	DECAL AMBER REFLECTOR	
7	818-230C	DECAL RED REFLECTOR	
8	818-268C	DECAL BLADE ROTATION	
9	818-276C	DECAL WARNING OPERATING ANGLE	
10	818-543C	DECAL DANGER PD GUARD MISS SML	
11	818-552C	DECAL DANGER PTO DRIVELINE	
12	818-556C	DECAL DANGER THROWN OBJ CUTTER	
13	818-561C	DECAL DANGER RAISED WING HAZAR	
14	818-555C	DECAL DANGER ROTATE BLADE	
14	818-564C	RPBY 818-555C	Obsolete
15	838-614C	DECAL REFLECTOR RED 2X9	S/N 813017+
16	818-830C	DECAL SAFETY COMBO SUNWEST	
17	818-840C	DECAL WARNING ROLLOVER HAZARD	
18	848-872C	DECAL 7 YEAR GEARBOX WARRANTY	
19	848-161C	DECAL LANDPRIDE 13.25 BRWN/GLD	S/N _____+
19	838-965C	DECAL LANDPRIDE 16" BROWN/GOLD	
19	818-902C	RPBY 838-965C	(Obsolete) S/N _____-
20	838-094C	DECAL WARNING HYD PRESS LONG	
21	838-588C	FOLDING CUTTER SPEED WARNING	
22	838-636C	DECAL DOMINATOR GREEN	Beige & Green Unit
22	848-264C	DECAL DOMINATOR ORANGE	Orange Unit
22	838-585C	DECAL DOMINATOR	Red Unit
23	848-122C	DECAL LANDPRIDE 34" TAN/BROWN	S/N _____+
23	838-959C	RPBY 848-122C	(Obsolete) S/N _____-
24	848-088C	DECAL DANGER GUARD MISSING	
25	848-301C	DECAL RCB6615 GREEN	S/N _____-
25	848-303C	DECAL RCB6615 GOLD	S/N _____+
25	848-302C	DECAL RCBM6615 GREEN	S/N _____-
25	848-304C	DECAL RCBM6615 GOLD	S/N _____+
26	848-128C	DECAL LANDPRIDE 25-GOLD	S/N _____+
26	848-631C	RPBY 848-128C	(Obsolete) S/N _____-
26	848-676C	RPBY 848-128C	Obsolete
27	838-615C	DECAL REFLECTOR AMBER 2X9	S/N 813017+

Touch-up Paints - LP

Applies to Models: RCBM6615 S/N 944729-, RCB6615 S/N 944729-

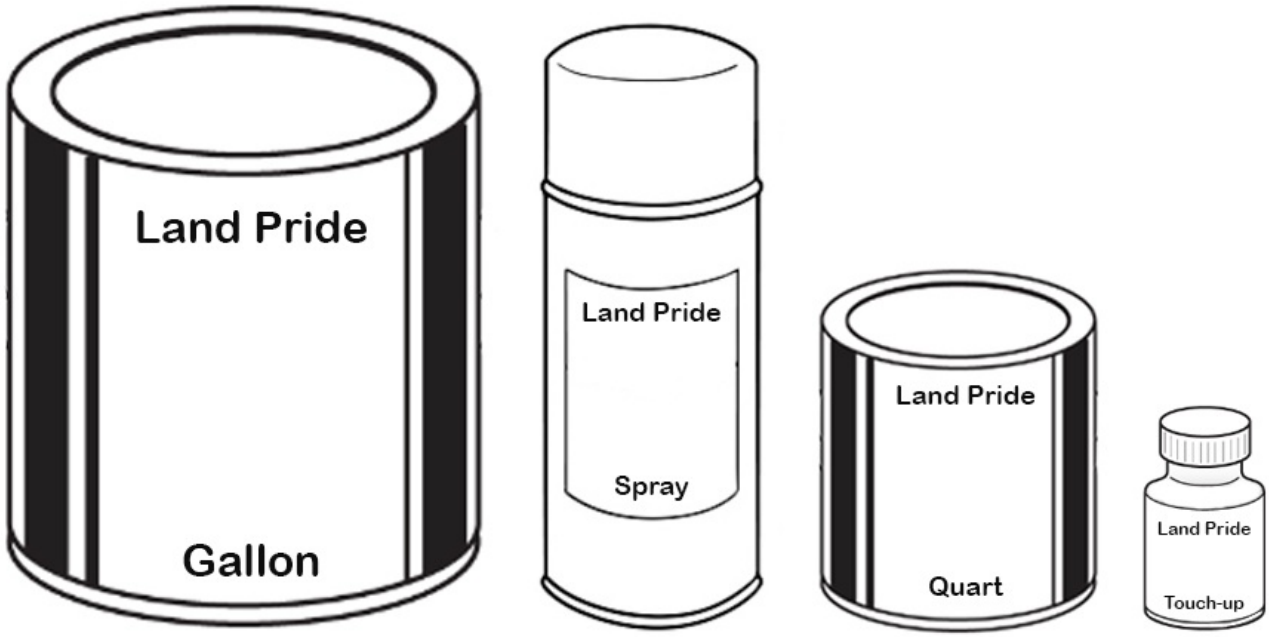

Touch-up Paints - LP

Applies to Models: RCBM6615 S/N 944729-, RCB6615 S/N 944729-

Ref.	Part No.	Part Description	Comments
	DWG 76585	Image No.	
	821-011C	PAINT LP BEIGE SPRAY CAN	Beige spray can
	821-070C	PAINT GP GLOSS BLACK SPRAY CAN	Black spray can
	821-054C	PAINT MED. RED SPRAY TRCK/CTR	Red spray can
	821-058C	PAINT GREEN SPRAY CUTTERS	Green spray can
	821-066C	PAINT ORANGE SPRAY CAN	Orange spray can
	821-067C	PAINT BLUE SPRAY CAN	Blue spray can
	821-080C	PAINT ALUMINUM/ZINC SPRAY CAN *	Aluminum/Zinc spray can
	821-011CTU	PAINT LP BEIGE TOUCH-UP 4OZ	Beige touch-up bottle with brush
	821-070CTU	PAINT GLOSS BLACK TOUCH-UP 4OZ	Black touch-up bottle with brush
	821-054CTU	PAINT MED RED TOUCH-UP 4OZ	Red touch-up bottle with brush
	821-058CTU	PAINT GREEN TOUCH-UP 4OZ	Green touch-up bottle with brush
	821-066CTU	PAINT ORANGE TOUCH-UP 4OZ	Orange touch-up bottle with brush
	821-067CTU	PAINT BLUE TOUCH-UP 5OZ	Blue touch-up bottle with brush
	821-080CTU	PAINT ALUMINUM/ZINC TOUCH UP *	Aluminum/Zinc touch-up bottle with brush
	821-011CQT	PAINT LP BEIGE QUART	Beige quart can
	821-070CQT	PAINT GP GLOSS BLACK QUART	Black quart can
	821-054CQT	PAINT MED RED QUART	Red quart can
	821-058CQT	PAINT GREEN QUART	Green quart can
	821-066CQT	PAINT ORANGE QUART	Orange quart can
	821-067CQT	PAINT BLUE QUART	Blue quart can
	821-080CQT	PAINT ALUMINUM/ZINC QUART *	Aluminum/Zinc quart can
	821-011CGL	PAINT LP BEIGE GALLON	Beige gallon can
	821-070CGL	PAINT GP GLOSS BLACK GALLON	Black gallon can
	821-054CGL	PAINT MED RED GALLON	Red gallon can
	821-058CGL	PAINT GREEN GALLON	Green gallon can
	821-066CGL	PAINT ORANGE GALLON	Orange gallon can
	821-067CGL	PAINT BLUE GALLON	Blue gallon can
	821-080CGL	PAINT ALUMINUM/ZINC GALLON	Aluminum/Zinc gallon can

Manual Winch Wing Deck

Applies to Models: RCBM6615 S/N 944729-, RCB6615 S/N 944729-

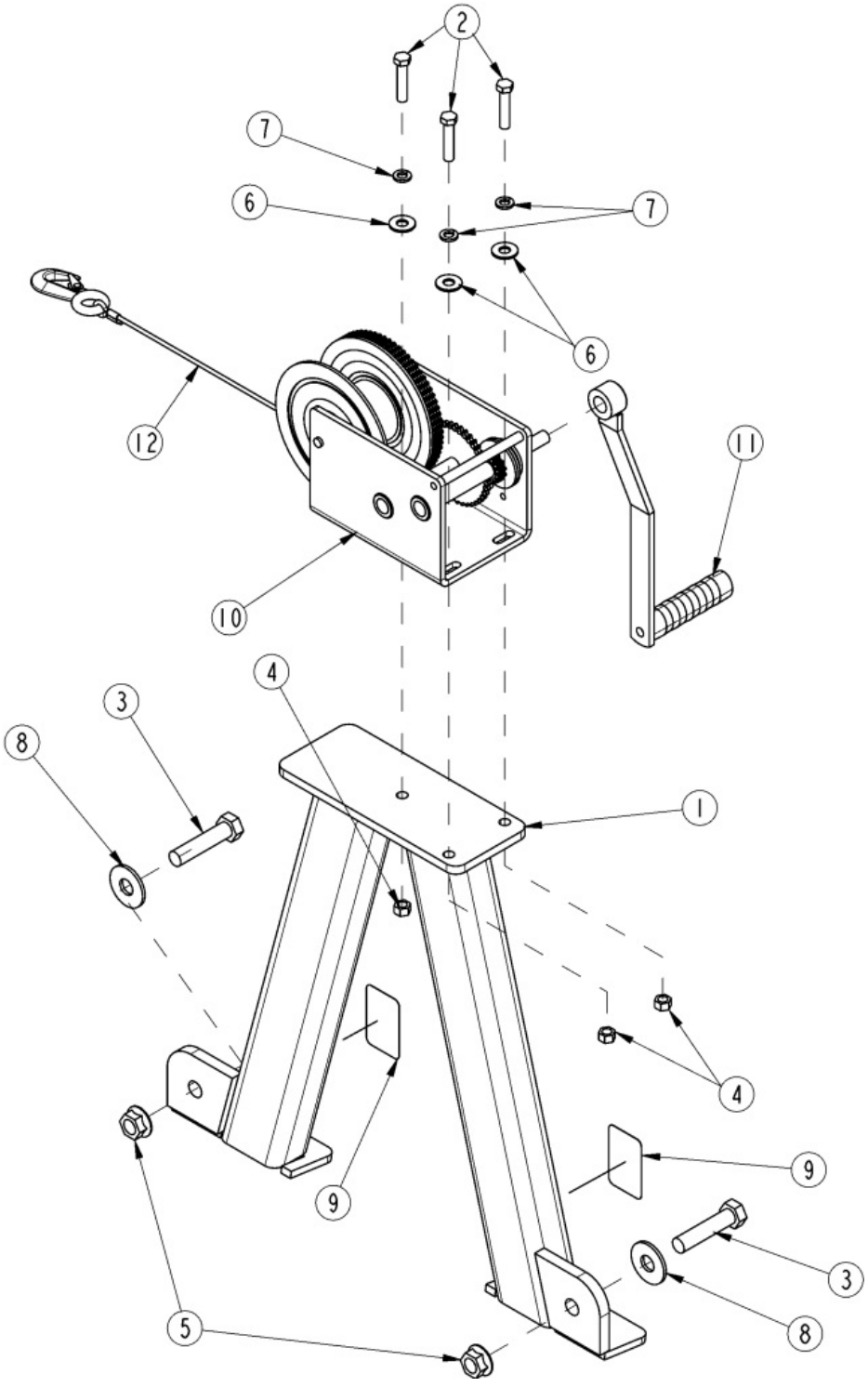

Manual Winch Wing Deck

Applies to Models: RCBM6615 S/N 944729-, RCB6615 S/N 944729-

Ref.	Part No.	Part Description	Comments
	DWG26943	Drawing Image Number	
	330-414A	MECHANICAL WINCH RC56 *	
1	330-413H	MECHANICAL WINCH	
2	802-023C	HHCS 3/8-16X1 3/4 GR5	
3	802-281C	HHCS 5/8-11X2 3/4 GR5	
4	803-013C	NUT LOCK 3/8-16 PLT	
5	803-263C	NUT HEX FLANGE LOCK 5/8-11 PLT	
6	804-011C	WASHER FLAT 3/8 USS PLT	
7	804-013C	WASHER LOCK SPRING 3/8 PLT	
8	804-019C	WASHER FLAT 5/8 USS PLT	
9	818-230C	DECAL RED REFLECTOR	
10	890-671C	BRAKE WINCH DLB2000	
11	890-679C	WINCH HANDLE 12" DBL2000	
12	890-680C	WINCH CABLE AND HOOK	

Tire Options

Applies to Models: RCBM6615 S/N 944729-, RCB6615 S/N 944729-

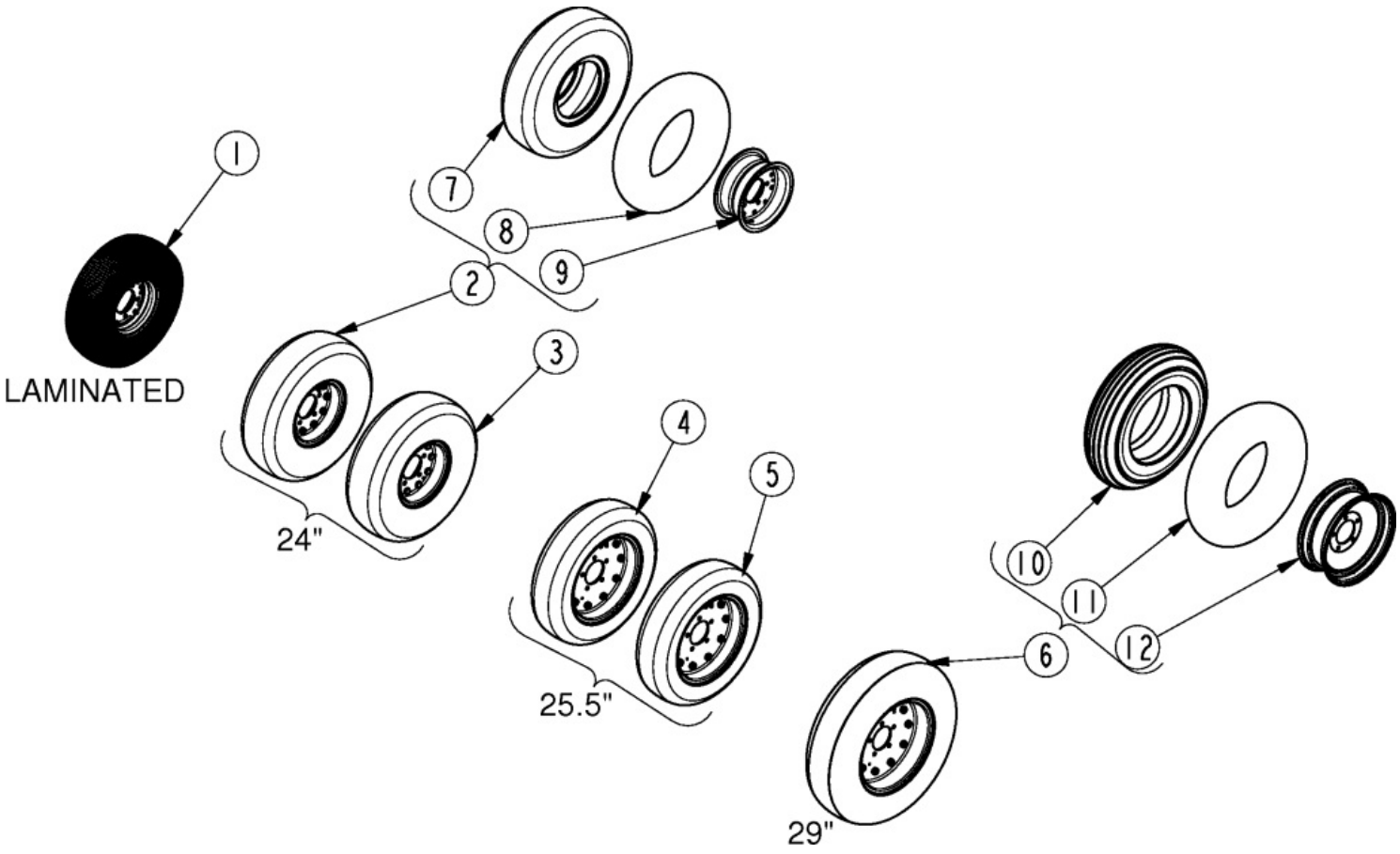

Tire Options

Applies to Models: RCBM6615 S/N 944729-, RCB6615 S/N 944729-

Ref.	Part No.	Part Description	Comments
	DWG35615	Drawing Image Number	
1	814-265C	TIRE & WHL LAM. 6X9X21(5-BOLT)	
2	814-285C	AC TIRE 24 X 7.7 2PC. 5-BOLT	
3	814-288C	AC TIRE FF 24X7.7 2PC 5-BOLT	
4	814-480C	NEW TIRE 25.5X8-14 20PLY	
5	814-478C	NEW TIRE FF 25.5X8-14 20PLY	
6	814-449C	TIRE, AC 29" 16 PLY 5 BOLT	
7	814-266C	TIRE 24X7.7-10	
8	814-268C	TUBE FOR 24X7.7-10	
9	814-296C	RIM 2PC 5BLT 10X6	
10	814-450C	TIRE H29X9.0X15 USED	
11	814-451C	TUBE FOR 814-204C/293C/449C	
12	814-461C	RIM 2PC 5BLT 15X6.5	

Part Number Index

Part Number	Page
0.121.7101.00	98, 100, 102, 104, 106, 108, 110, 112
0.252.7525.00	98, 100, 102, 104, 106, 108, 110, 112
0.285.7510.00	98, 100, 102, 104, 106, 108, 110, 112
0.288.7101.00	98, 100, 102, 104, 106, 108, 110, 112
0.305.0300.01	114, 116
0.305.1300.00	114, 116
0.305.2000.00	114, 116
0.305.3000.00	114, 116
0.709.7500.00	98, 100, 102, 104, 106, 116
0.712.7500.00	98, 100, 102, 104, 106
010063	118, 120
020061	118, 120
020110	118, 120
020162	118, 120
030193	118
030194	118
030412	120
030413	120
03-15316	72, 74, 80, 82
03-15570	72, 74, 80, 82
040121	118, 120
040124	118, 120
044321	68, 70, 92, 96
050008	118, 120
050012	118, 120
050013	118, 120
050014	118, 120
050015	118, 120
060020	118, 120
060051	118, 120
070057	118, 120
070058	118, 120
070140	118, 120
070141	118, 120
070142	118, 120
070151	118, 120
087276	68, 70, 92, 96
090003	118, 120
097133	68, 70, 92, 96
097140	68, 70, 92, 96
1.181.7101.00	98, 100, 102, 104, 106, 108, 110, 112
107542	88, 96
11-14988	72, 80, 82
11-15180	72, 80, 82
11-80005	72, 80, 82
120025	118, 120
121.028.1025.01	94
121.028.1031.01	94
122.580.023.1	90
122.580.511.1	90
123.386.190.01	94
123.486.343.01	94
125140	96
125142	96
125545	88
128300	128
130021	118, 120
130030	118, 120
130560	126, 128, 130, 132
13-10021	74
13-10022	74
13-15249	74
134950	128
134953	126, 128
135995	126
140046	118, 120
141.026.357.1	76, 78
141.028.195.1	90, 94
142.283.2509821	94
142.286.2519821	94
142.287.2199821	94
1422831949821	90
1422871029821	90
146.264.024.1	76, 78, 84
146.284.020.1	86, 90, 94
148000	130, 132
148202	130, 132
150.281.5197810	94
151.016.031.1	76
151.016.037.1	78, 84
151.016.896.1	78
151.018.016.1	86, 94
151.018.228.1	78, 84, 86, 94
151.018.241.1	90, 94
151.018.242.1	94
1522805450710	90
155.150.724	76, 78
159.280.168	94
165.000.548	78, 84, 86, 94
165.000.589	76, 78, 84, 86, 90, 94
168556	88
170.016.630.1	76, 78
180.014.022	78, 84, 86, 94
180.014.240	90, 94
180.016.025	90
180.016.130	76
180.016.780	78
180.016.790	94
180.018.004	90
180.018.251	90, 94
180.018.252	90, 94
180.018.393	90, 94
180.018.435	94
180.018.437	90
180.018.581	94
180.019.014	78, 84, 86, 94
180.019.018	78, 84, 86, 94
180.019.019	78, 84, 86, 94
180.019.115	78, 84, 86, 94
180.019.116.1	78, 84, 86, 94
180.019.340	78, 84, 86, 94
186562	126, 128, 130, 132
190.000.016	76, 78
190.000.032	78
190.000.035	94
190.000.047	78, 94
190.000.098	94
190.000.099	94
190.000.243	90, 94
190.000.271	94
190.000.932	94
190224	96
19-15121	74, 80, 82
19-15135	72, 80, 82

Part Number	Page
1M6010-ADI	122, 124
200-001D	36, 38, 40, 42, 44, 48
200003	118, 120
235005	130, 132
26-13387	82
26-15120	72, 74, 80
26-16033	72, 74, 80, 82
292675	126
294028	128
294719	126
294737	132
294738	128, 130
2A0016	122, 124
2A0024	122, 124
2A0132	122, 124
2M5416	122, 124
304011	68, 70, 92
304046	68, 70, 92, 96
312-075D	4
312-082D	4
312-089D	4
312209	68, 70, 92
312-808D	4
318-000D	66
318-005H	28
318-006H	26, 28
318-053L	26, 28
318-107D	52, 56, 60
318-108D	54, 58, 62
318-129D	66
318-190D	4
318-322D	6
318-337D	52, 56, 60
318-357H	30
318-358H	20
318-401H	6
318-478D	54, 58, 62
318-556H	26
318-586A	4
318-606D	56
318-617D	52, 56, 60
318-620K	56
318-633D	10
318-636D	52, 60
318-657D	64
318-696H	10, 14
318-696H81	10, 14
318-696H82	10, 14
318-696H83	10, 14
318-707K	52
318-728K	64
318-746D	6
318-766H	4
318-834H	20
318-917D	64
318-918D	64
318-924D	66
318-925D	66
318-927D	10, 14
318-928D	10
318-929D	58
318-930D	54, 62
318-931D	56
318-932D	52, 60
318-952D	66
318-965D	56
318-966D	52, 60
318-967D	58
318-968D	54, 62
321256	68
323524	92, 96
325027	68, 70, 92, 96
326-099D	52, 56, 60
326-535D	54, 58, 62
330-001D	6
330-050D	58
330-051D	54, 62
330-155K	60
330-179H	36
330-184H	40
330-185H	6
330-186H	6
330-186H81	6
330-186H82	6
330-186H83	6
330-187H	10
330-187H81	10
330-187H82	10
330-187H83	10
330-188H	10
330-188H81	10
330-188H82	10
330-188H83	10
330-189H	6
330-189H81	6
330-189H82	6
330-189H83	6
330-190H	10
330-190H81	10
330-190H82	10
330-190H83	10
330-191H	10
330-191H81	10
330-191H82	10
330-191H83	10
330-195H	32
330-196L	32
330-219S	10
330-219S81	10
330-219S82	10
330-219S83	10
330-220S	10
330-220S81	10
330-220S82	10
330-220S83	10
330-222H	24
330-223H	26, 28
330-225A	28
330-230H	136
330-234K	58
330-235K	54
330-236K	62
330-237K	56
330-238K	52
330-239K	60
330-271H	20, 22, 30
330-273K	56
330-274K	52
330-275K	60
330-276K	58
330-277K	54
330-278K	62
330-279A	56
330-280A	52
330-281A	60
330-282A	58
330-283A	54
330-284A	62
330-286K	6
330-286K82	6
330-286K83	6
330-289H	44, 46

Part Number	Page
330-291S	6
330-293H	48, 50
330-298H	48, 50
330-314A	64
330-315A	66
330-316K	64
330-317K	64
330-318K	66
330-319K	66
330-320K	66
330-321H	30
330-331D	36, 38, 40, 42, 44, 46, 48, 50
330-332A	30
330-333A	20
330-334A	26
330-335A	18
330-345H	36, 38
330-348H	18
330-413H	142
330-414A	142
330-415H	36, 38, 44, 46
330-449K	58
330-450K	54
330-451K	62
330-503H	40, 42
330-541H	40, 42
330-563D	20
330-564D	20
330-587S	136
330-588S	136
330-597D	54, 58, 62
330-607H	36, 38
330-608H	40, 42
330-612H	44, 48
330-616H	44, 48
330-648S	30
330-835D	14
330-836D	134
330-869A	34
330-870H	34
330-881S	34
330-938K	38, 42, 46, 50
330-974K	20
330-975H	20
331-099H	38
331-100H	42
331-120H	14
331-202H	46, 50
331-203H	14
331-203H81	14
331-203H82	14
331-203H83	14
331-204H	14
331-204H81	14
331-204H82	14
331-204H83	14
331-205H	14
331-205H81	14
331-205H82	14
331-205H83	14
331-206H	14
331-206H81	14
331-206H82	14
331-206H83	14
331-209S	14
331-209S81	14
331-209S82	14
331-209S83	14
331-210S	14
331-210S81	14
331-210S82	14
331-210S83	14
331-211H	30
331-543D	22
333645	70
334-045A	22
334-046H	22
334-048H	22
334-252K81	14
334-252K82	14
334-252K83	14
334-253K81	14
334-253K82	14
334-253K83	14
334-465H	46, 50
335603	88
339107	68
355155	68, 70
359474	68, 70, 92, 96
362428	68
362430	70
364915	68, 70
365305	68, 70, 92, 96
371708	96
371709	96
377436	92
377437	68, 70, 92
377442	68
380371	68, 70, 96
383333	96
383334	96
387767	92
387768	70
388957	68
389850	68
390257	68
39-10039	74
391409	70
391410	70
393173	88
393916	88
394874	92
395980	88, 92, 96
396295	92, 96
397493	92, 96
399469	96
3R2412	124
3R2440	124
3R3412	122
464265	126
464266	132
464267	130
491798	128
492278	126
492338	130, 132
492652	126, 128, 130, 132
492662	132
492664	132
492670	126
492676	128, 130
492677	128, 130
492700	126, 128, 130, 132
4R2106	124
4R2109	124
4R3106	122
4R3109	122
548-001S	134
548-002S	134
548-004S	134
55051-1817	72, 80, 82
5R2116	124
5R3116	122
639558	126

Part Number	Page
639560	132
639561	128, 130
68810-1003	74, 80
68810-1004	72
68810-1005	82
6R2164-ADI	124
6R3164-ADI	122
702352	68, 70, 92
7M5316	122, 124
8.0.9.00079	98, 100, 102, 104, 106, 108, 110, 112
8.0.9.00143	98, 100, 102, 104, 106, 108, 110, 112, 114, 116
8.0.9.01090	98, 100, 102, 104, 106, 108, 110, 112
8.1.1.00109	114, 116
8.1.1.00501	98, 100, 102, 104, 106, 108, 110, 112
8.2.2.00560	98, 100, 102, 104, 106, 108, 110, 112
8.4.7.01045	98, 100, 102, 104, 106, 108, 110, 112
8.4.7.02265	98, 100, 102, 104, 106, 108, 110, 112
8.5.1.00533	98, 100, 102, 104, 106, 108, 110, 112
8.5.2.00332	98, 100, 102, 104, 106, 108, 110, 112
8.5.2.01772	114, 116
8.6.5.00006	98, 100, 102, 104, 106, 108, 110, 112
8.6.5.00203	108, 110, 112
8.6.6.00201	114, 116
8.7.1.02348	98, 100, 102, 104, 106, 108, 110, 112, 114, 116
8.7.1.02349	98, 100, 102, 104, 106, 108, 110, 112
8.7.3.00331	98, 100, 102, 104, 106, 108, 110, 112, 114, 116
800-001C	10, 14, 20, 22, 46, 50
800-073C	36, 38, 40, 42, 44, 48
800-080C	10, 14, 24, 30, 36, 38, 40, 42, 44, 48
801-023C	126, 128
801-229C	46, 50
802-005C	6
802-015C	66
802-022C	10, 14
802-023C	122, 124, 142
802-053C	6, 18, 20, 22, 26, 28, 30
802-058C	6
802-065C	4, 6, 10, 14
802-070C	20
802-074C	20, 30
802-075C	22
802-079C	22, 58, 118, 120
802-082C	18, 20, 26, 28, 30, 36, 38, 40, 42, 44, 46, 48, 50, 136
802-091C	6
802-096C	24
802-099C	36, 38, 40, 42, 44, 46, 48, 50
802-106C	6
802-143C	24, 36, 38, 40, 42, 44, 46, 48, 50
802-155C	14
802-183C	34
802-196C	6
802-205C	20, 30
802-214C	10, 14, 52, 54, 56, 58, 60, 62, 64, 66
802-235C	20
802-277C	4
802-281C	34, 142
802-282C	6
802-314C	6, 10, 14
802-466C	10, 14
802-486C	88
802-552C	32
802-594C	20
802-729C	26
802-754C	32, 136
802-779C	36, 38, 40, 42, 44, 48
802-877C	26, 28
803-013C	24, 36, 38, 40, 42, 44, 46, 48, 50, 142
803-014C	10, 14, 134
803-019C	34, 36, 38, 40, 42, 44, 46, 48, 50
803-020C	126
803-022C	128, 130, 132
803-024C	36, 38, 44, 46
803-025C	32
803-029C	38, 42
803-030C	30, 32, 136
803-031C	30
803-037C	6, 10, 14, 18, 20, 26, 28, 30, 52, 54, 56, 58, 60, 62, 64, 66, 136
803-043C	6
803-053C	36, 40, 44, 48
803-168C	20
803-169C	36, 38, 40, 42, 44, 46, 48, 50
803-170C	4
803-181C	4, 20

Part Number	Page
803-198C	10, 16, 66
803-201C	22
803-209C	58
803-230C	6
803-234C	122, 124
803-255C	6
803-258C	20, 22, 26, 28, 30
803-263C	6, 34, 142
803-281C	88
803-299C	6, 10, 16
803-301C	20, 22, 30
803-304C	18, 20, 22, 26, 28, 30
803-310C	36, 38, 40, 42, 44, 48
803-316C	24
803-381C	36, 38, 40, 42, 44, 46, 48, 50
804-007C	6
804-008C	44
804-009C	6, 10, 16
804-010C	6, 10, 16
804-011C	58, 142
804-012C	6, 134
804-013C	10, 16, 22, 118, 120, 134, 142
804-016C	36, 38, 40, 42, 44, 46, 48, 50
804-017C	6, 34
804-019C	34, 142
804-021C	128
804-022C	6, 36, 38, 44, 46
804-025C	20, 26, 28
804-027C	32, 136
804-028C	20, 24, 30
804-029C	32, 36, 38, 44, 46, 136
804-055C	38, 42
804-088C	36, 48
804-147C	4
804-171C	20, 30
804-216C	36, 40, 44, 48
805-045C	6, 26, 28
805-058C	36, 38, 40, 42, 44, 46, 48, 50
805-083C	26, 28
805-104C	32, 36, 38, 44, 46, 136
805-105C	20, 22, 30
805-124C	122, 124
805-131C	136
805-246C	36, 38, 40, 42, 44, 48
805-292C	24, 36, 38, 40, 42, 44, 46, 48, 50
805-309C	6
805-374C	32, 36, 38, 44, 46
805-425C	136
806-138C	134
806-213C	36, 38, 44, 46
807-073C	6
807-271C	36, 38, 40, 42
810-173C	124
810-174C	122
810-175C	122, 136
810-176C	124, 136
810-632C	126, 136
810-671C	128, 136
810-818C	136
810-830C	130, 136
810-831C	132, 136
810-885C	128, 130
811-063C	134
811-088C	134
811-094C	134
811-101C	134
811-238C	134
811-394C	134
811-619C	134
811-826C	134
811-827C	134
811-913C	134
811-914C	134
811-917C	134
811-918C	134
811-919C	134
814-265C	144
814-266C	144
814-268C	144
814-285C	144
814-288C	144
814-296C	144
814-449C	144
814-450C	144
814-451C	144
814-461C	144
814-478C	144
814-480C	144
815-241C	44, 48
815-242C	38, 42
815-243C	36, 38, 40, 42, 44, 48
815-244C	36, 40, 44, 48
815-291C	36, 40
815-308C	40
815-425C	38
815-429C	42
815-430C	42
815-431C	42
815-432C	42
815-433C	46, 50
816-246C	66
816-456C	64
816-481C	6
816-497C	36, 38, 40, 42, 44, 48
816-606C	64
816-607C	64
816-608C	66
817-259C	6
818-045C	138
818-055C	6, 138
818-130C	138
818-142C	138
818-229C	138
818-230C	34, 138, 142
818-240C	138
818-268C	138
818-276C	138
818-540C	68, 70, 96
818-543C	138
818-552C	68, 70, 96, 138
818-555C	138

Part Number	Page
818-556C	138
818-561C	138
818-564C	138
818-830C	138
818-840C	138
818-902C	138
820-168C	4
820-169C	4
820-170C	4
820-478C	4
820-479C	4
820-480C	4
820-724C	4
820-725C	4
820-726C	4
821-011C	140
821-011CGL	140
821-011CQT	140
821-011CTU	140
821-054C	140
821-054CGL	140
821-054CQT	140
821-054CTU	140
821-058C	140
821-058CGL	140
821-058CQT	140
821-058CTU	140
821-066C	140
821-066CGL	140
821-066CQT	140
821-066CTU	140
821-067C	140
821-067CGL	140
821-067CQT	140
821-067CTU	140
821-070C	140
821-070CGL	140
821-070CQT	140
821-070CTU	140
821-080C	140
821-080CGL	140
821-080CQT	140
821-080CTU	140
822-020C	36, 38, 40, 42, 44, 48
822-021C	36, 38, 40, 42, 44, 48
822-033C	36, 38, 40, 42, 44, 48
822-034C	36, 38, 40, 42, 44, 48
826-112C	6, 68
826-247C	6, 70
826-320C	8, 12, 98
826-321C	12, 100
826-322C	12, 16, 102
826-323C	8, 104
826-324C	12, 16, 106
826-478C	8, 76
826-481C	12, 16, 90, 92
826-486C	8, 12, 16, 98, 100, 102, 104, 106, 108, 110, 112
826-497C	8, 114, 116
826-520C	8, 114, 120
826-521C	8, 116, 118
826-587C	68
826-603C	70
826-643C	6, 72
826-644C	6, 80
826-645C	6, 82
826-648C	12, 16
826-729C	8, 12, 16, 108
826-730C	12, 16, 110
826-731C	8, 112
826-793C	8, 74
826-812C	12, 16, 94, 96
826-818C	8, 78
826-848C	114, 116
838-094C	138
838-585C	138
838-588C	138
838-614C	138
838-615C	138
838-636C	138
838-959C	138
838-965C	138
840-273C	8, 12, 16
841-284C	134
841-308C	134
848-088C	138
848-122C	138
848-128C	138
848-161C	138
848-264C	138
848-301C	138
848-302C	138
848-303C	138
848-304C	138
848-631C	138
848-676C	138
848-872C	138
890-005C	30, 40, 42, 48, 50
890-153C	8
890-175C	52, 56, 60
890-182C	24
890-341C	52, 54, 56, 58, 60, 62
890-400C	52, 54, 58, 60, 62
890-401C	8
890-671C	142
890-672C	60, 62
890-679C	142
890-680C	142
890-786C	24
890-806C	26
890-836C	22
890-850C	22, 30
890-862C	20
890-970C	24, 38, 40, 42, 44, 46, 48, 50
891-177C	36, 38, 40, 42, 44, 46, 48, 50
891-236C	60, 62
891-999C	46, 50
90-24406	72
90-26654	74
91-25023	80
92-24406	72, 80
92-25075	82
93-24406	72
93-25023	74, 80
93-25075	82
94-26654	74
96-24406	72, 80
96-25075	82
96-26654	74
97-24406	72

Part Number	Page
97-25023	80
97-25075	82
97-26654	74
98-24406	72, 80
98-25075	82
98-26654	74
990-208R	60, 62
99-24406	72, 74, 80, 82
A.305.500	114
A.305.501	116
A.709.500	98, 100, 102, 104, 106, 108, 110, 112, 114, 116
A.712.500	98, 100, 102, 104, 106, 108, 110, 112
DWG 10846	122
DWG 18548	68
DWG 18549	70
DWG 21167	98, 102, 104
DWG 21171	100
DWG 23957	84
DWG 24722	4
DWG 24726	106
DWG 26544	58
DWG 26557	28
DWG 26568	18
DWG 26569	20
DWG 26570	26
DWG 26571	30
DWG 26706	120
DWG 26707	118
DWG 26959	114
DWG 26960	116
DWG 27837	10
DWG 27839	6
DWG 27840	32
DWG 27846	138
DWG 27884	126
DWG 27885	128
DWG 30185	72
DWG 30187	80
DWG 33229	130
DWG 33230	132
DWG 33987	108
DWG 33988	110
DWG 33989	112
DWG 35531	14
DWG 37502	96
DWG 37510	78
DWG 37553	94
DWG 37646	22
DWG 70947	74
DWG 76585	140
DWG 78304	124
DWG23952	76
DWG23953	90
DWG23958	86
DWG25919	92
DWG25961	88
DWG26541	64
DWG26542	66
DWG26543	56
DWG26545	52
DWG26547	54
DWG26548	60
DWG26549	62
DWG26556	24
DWG26943	142
DWG27719	44
DWG27720	48
DWG27728	36
DWG27729	40
DWG27844	134
DWG27848	136
DWG30189	82
DWG33273	34
DWG35219	46
DWG35220	50
DWG35227	42
DWG35228	38
DWG35615	144
N/A	114, 116, 122, 124, 126, 128, 130, 132
U0.125.0532.00	98, 100, 102, 104, 106, 108, 110, 112
U0.125.1301.00	98, 100, 106
U0.125.1303.00	98, 100, 102, 104, 108, 110, 112
U0.125.2050.00	98, 100, 102, 104, 106, 108, 110, 112
U0.125.3003.00	98, 100, 102, 104, 106, 108, 110, 112
U0.125.5003.00	102, 104, 106
U0.125.5005.00	98, 100
U0.125.5053.00	108, 110
U0.125.5061.00	112
U0.125.6003.00	102, 104, 106
U0.125.6004.00	98, 100
U0.125.6053.00	108, 110
U0.125.6061.00	112
U0.125.7003.00	98, 100, 104, 106
U0.125.7100.00	98, 100, 102, 104, 106, 108, 110, 112

This Page Intentionally Left Blank

Great Plains Manufacturing, Inc.
Corporate Office: P.O. Box 5060
Salina, Kansas 67402-5060 USA

www.landpride.com