Table of Contents Part Number Index

Tree/Post Puller

AP-STP15

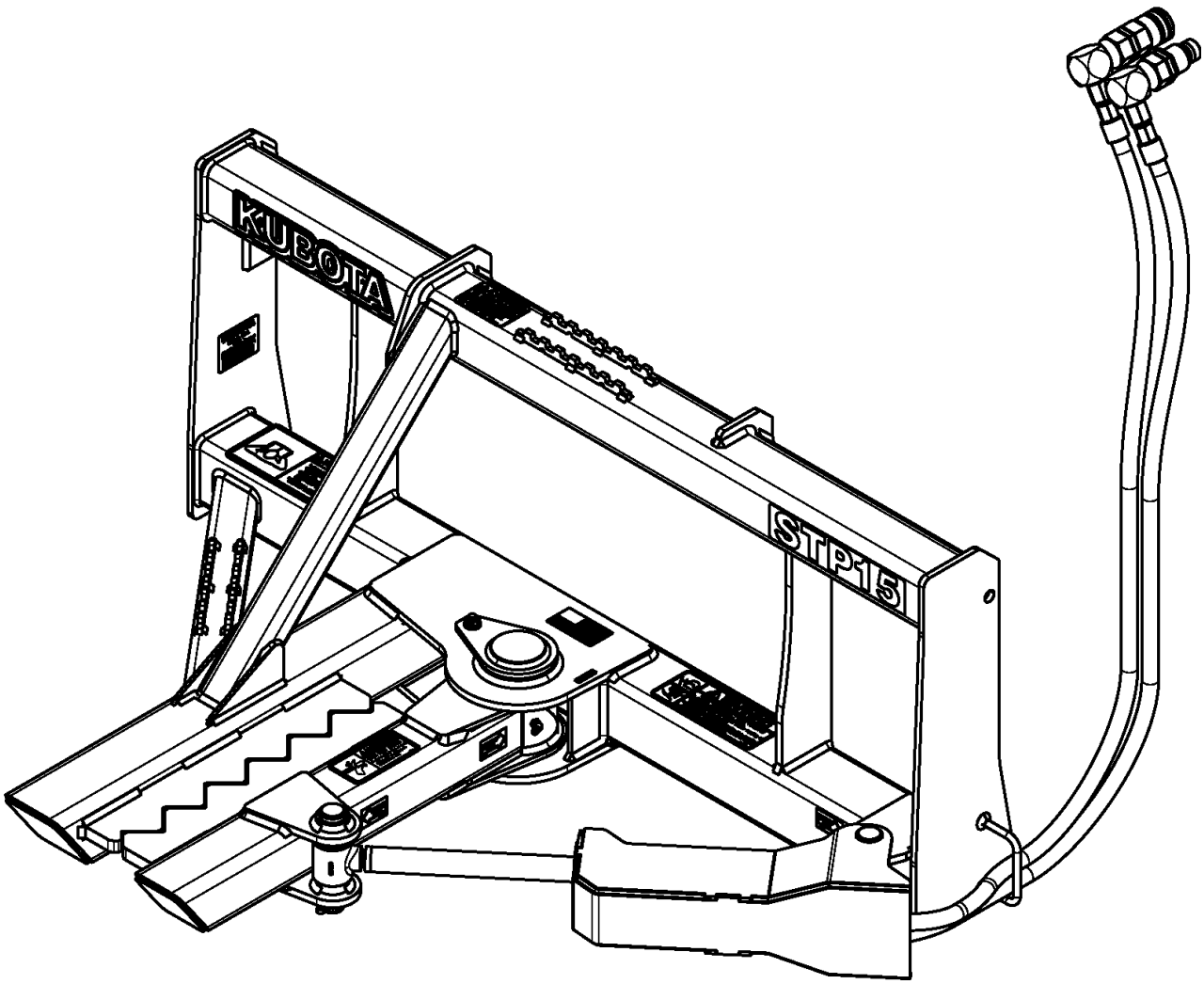

37688

328-222PK
Parts Manual

Kubota®

Read the Operator's Manual entirely. When you see this symbol, the subsequent instructions and warnings are serious - follow without exception. Your life and the lives of others depend on it!

© Copyright 2016 Printed 10/27/16

Cover photo may show optional equipment not supplied with standard unit.

Table of Contents

Section 1: Introduction.....4
Using This Manual.....4
Manual Replacement Information.....4
Manual Revisions.....4
Touch-up Paint.....4
Hardware Legend.....5
Replacement Hardware.....5
Serial Numbers.....5
Part Number Service Coding.....5
Section 2: Frame.....6
Frame & Pincher Arm.....6
Section 3: Hydraulics.....8
Hydraulic Assembly.....8
Hydraulic Cylinder (851-334C).....10
Section 4: Labels.....12
Label Placement.....12

Part Number Index.....14

© Copyright 2016. All rights reserved.

Kubota provides this publication “as is” without warranty of any kind, either expressed or implied. While every precaution has been taken in the preparation of this manual, Kubota assumes no responsibility for errors or omissions. Neither is any liability assumed for damages resulting from the use of the information contained herein. Kubota reserves the right to revise and improve its products as it sees fit. This publication describes the state of this product at the time of its publication, and may not reflect the product in the future. The illustrations in this manual are not intended for safe and proper assembly or disassembly of equipment. The illustrations are intended for ordering parts only.

Kubota is registered trademark.

All other brands and product names are trademarks or registered trademarks of their respective holders.

Printed in the United States of America.

Alphabetized Table of Contents

F

Frame & Pincher Arm.....6

H

Hydraulic Assembly.....8
Hydraulic Cylinder (851-334C).....10

L

Label Placement.....12

General Information

Using This Manual

This manual is divided into sections. The first section contains General Information. The remaining sections divide the machine into segments (i.e. Frames, Drives, Hydraulics, etc.) which illustrate and list all parts. A Parts Number Index is located at the back of the book.

The Kubota parts in this manual are specially designed for this machine and should be replaced with Kubota parts only.

The information in this manual is current at time of printing. Some parts may change to assure top performance.

Right-hand and left-hand as used in this manual are determined by facing the direction the machine will travel while in use.

Below is an example of two facing pages from a parts manual. Familiarize yourself with the type of information contained on these pages.

Manual Replacement Information

Replacement manuals are available. Refer to our website at www.kubota.com for additional information. Our website continues to provide the most up-to-date manuals available.

Touch-up Paint

Repaint parts where paint is worn or scratched to prevent rust. Kubota touch-up paints are available through your local Kubota dealer. Part numbers and color descriptions are listed below.

Part No.	Part Description
821-070C	GP Gloss black enamel spray can
821-070CTU	GP Gloss black enamel bottle with brush
821-070CQT	GP Gloss black enamel quart
821-070CGL	GP Gloss black enamel gallon

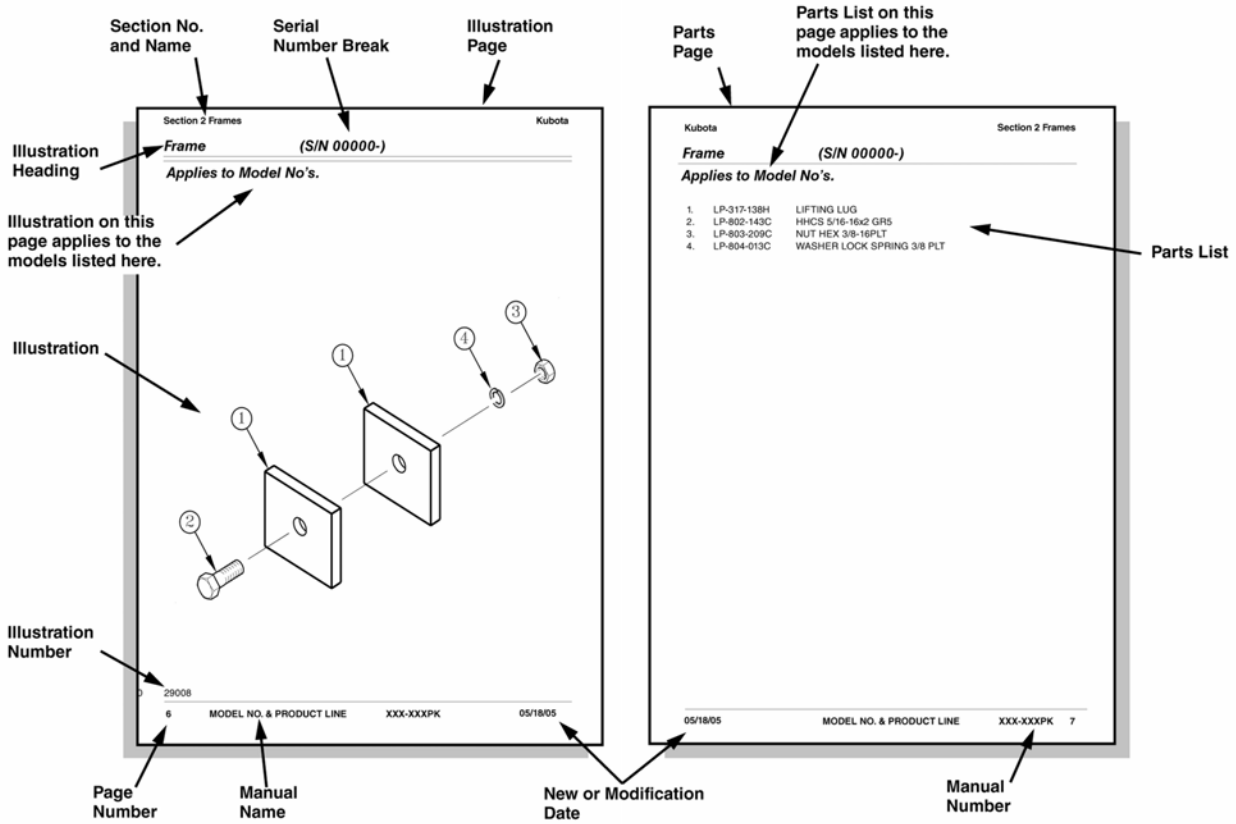

General Information

Hardware Legend

AR	As Required
BLADE	Blade Bolt
C	Cap Screw
CP	Cotter Pin
CPHSSS	Cup Point Hex Socket Set Screw
CPSHSS	Cup Point Square Head Set Screw
CPSQHSS	Cup Point Square Head Set Screw
CRFCHMS3	Cross Recess Flat Countersunk Head Machine Screw
CRPHMS	Cross Recess Pan Head Machine Screw
CRPHTFS	Cross Recess Pan Head Thread Forming
CRRHMS	Cross Recess Round Head Machine Screw
CRTHMS	Cross Recess Truss Head Machine Screw
CSNB	Countersunk Square Neck Bolt
FHMS	Flat Head Machine Screw
FTC	Full Thread Cap Screw
H	Hex Nut
HCLN	Hex Center Lock Nut
HFLCS	Hex Flange Lock Cap Screw
HFS	Hex Flange Screw
HFSLN	Hex Flange Serrated Lock Nut
HFSS	Hex Flange Serrated Screw
HHCS	Hex Head Cap Screw or Metric Bolt
HSBHCS	Hex Socket Button Head Cap Screw
HSFCHCS	Hex Socket Flat Countersunk Head Cap Screw
HSHCS	Hex Socket Head Cap Screw
HSSS	Hex Socket Head Screw
HTLN	Hex Top Lock Nut
HWHCS	Hex Washer Head Cap Screw

HWHMS	Hex Washer Head Machine Screw
HXBHCS	Hex Socket Button Head Cap Screw
J	Hex Jam Nut
JIC	37 Degree Tapered Thread
L	Helical Spring Lock Washer
LUG	Lug Bolt
NFC	National Fine Cap Screw
NPSM	National Pipe Straight Mechanical
NPTF	National Pipe Taper Fuel
P	Wide Plain Washer
PHMS	Pan Head Machine Screw
PLOW	Plow Bolt
RHMS	Round Head Machine Screw
RHSNB	Round Head Square Neck Bolt
SCREW LEVELING	Leveling Screw
SCREW THUMB	Thumb Screw
SCREW WELD	Weld Screw
SFCHMS	Slotted Flat Countersunk Head Machine Screw
SFHMS	Slotted Fillister Head Machine Screw
SP	Special
SP SCREW	Special Screw
SQHSS	Square Head Set Screw
SRHMS	Slotted Round Head Machine Screw
SSS	Socket Set Screw
STCS	Self Tapping Cap Screw
STHMS	Slotted Truss Head Machine Screw
WHEEL	Wheel Studs and Hub Long Bolts
WING	Wing Bolt

Replacement Hardware

The **Hardware Legend** above lists hardware abbreviations used in the parts list. All bolts and nuts are Grade 5 unless otherwise noted. The use of improper grades of hardware can result in personal injury, damage to equipment, or loss of property.

Part Number Service Coding

Within the parts list some part numbers are coded for revisions and interchangeability. See notations in revision column.

Serial Numbers

Always use the serial and model number when ordering parts. Refer to the Operator's Manual for serial number plate location.

(S/N 20001+)	Includes serial numbers 20001 and above (to the latest number)
(S/N 10001 to 20000)	Includes serial numbers between and including 10001 and 20000
(S/N 10000-)	Includes serial numbers 10000 and below (to the earliest number)

Frame & Pincher Arm

Applies to AP-STP15

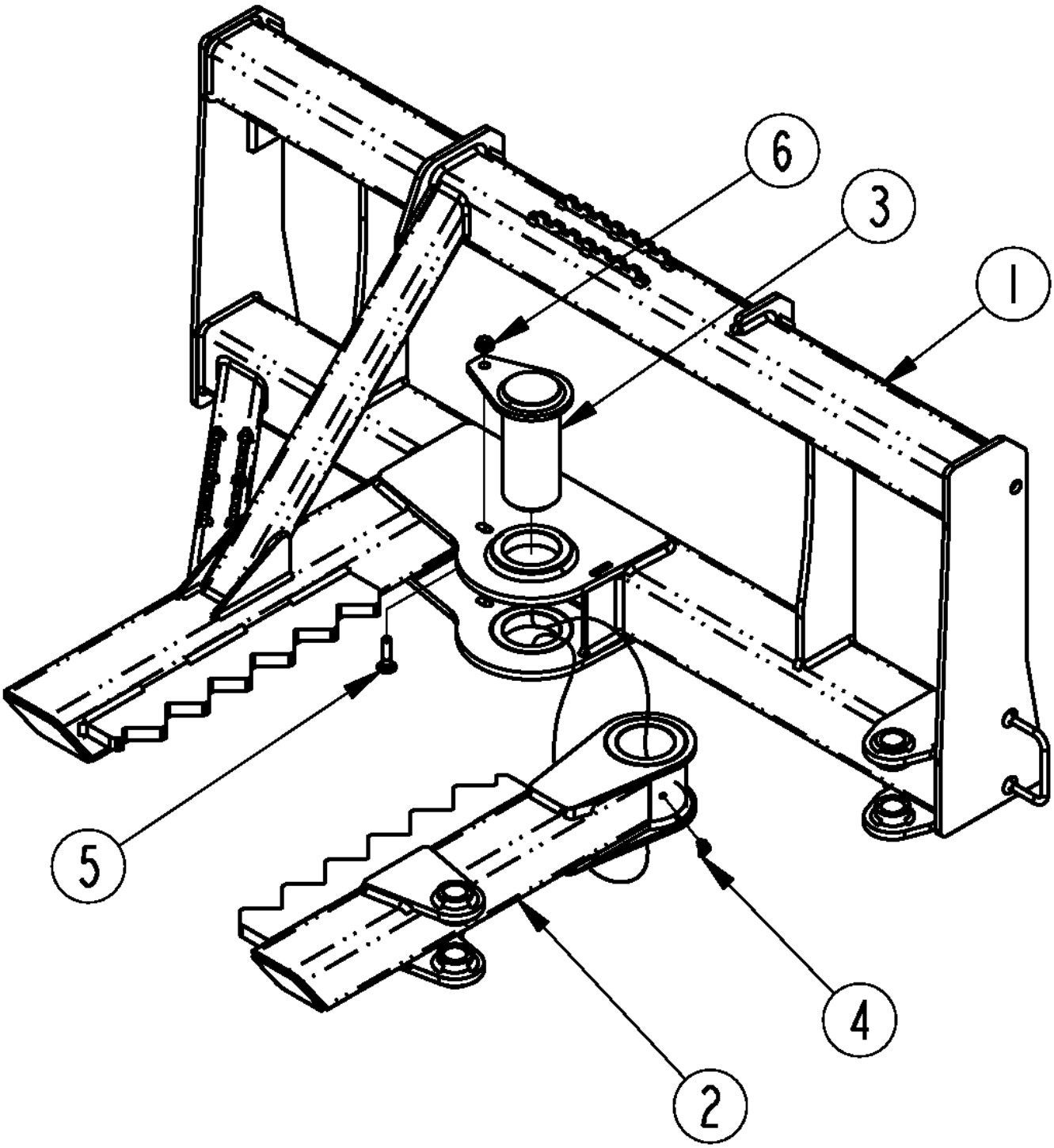

37301

Frame & Pincher Arm

Applies to AP-STP15

Ref.	Part No.	Part Description	Comments	Revision
	Dwg 37301	Drawing Image Number		
1.	328-216H	WMT, STP15 FRAME		
2.	328-217H	WMT, PINCER ARM		
3.	328-221H	WMT, MAIN PVT PIN		
4.	800-136C	ZERK 1/4-28 X 45 DEG SELF-TAP		
5.	802-453C	RHSNB 3/8-16X1 1/2 GR5		
6.	803-198C	NUT HEX WHIZ 3/8-16 PLT		

Hydraulic Assembly

Applies to AP-STP15

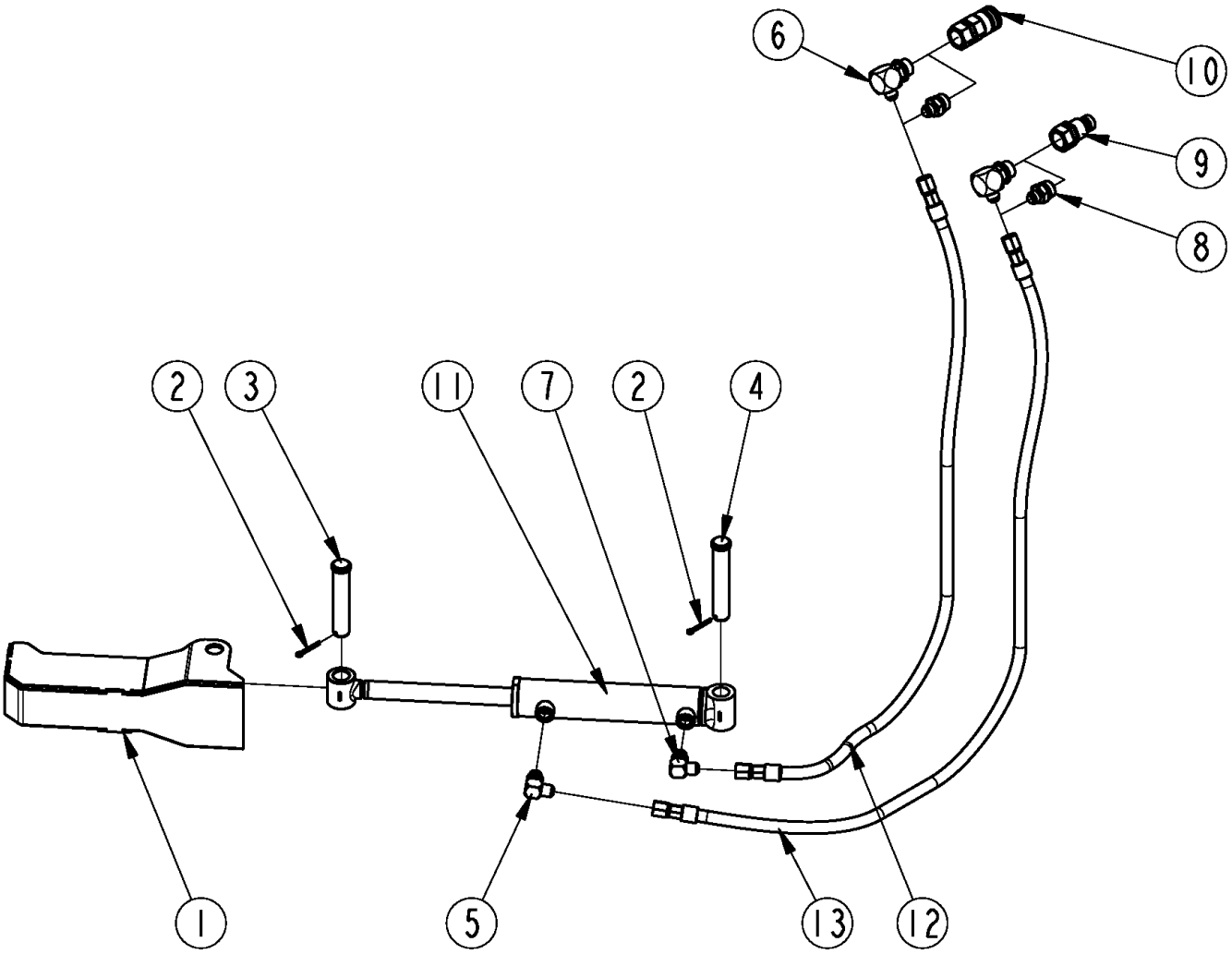

37302

Hydraulic Assembly

Applies to AP-STP15

Ref.	Part No.	Part Description	Comments	Revision
	Dwg 37302	Drawing Image Number		
1.	328-223H	SHIELD, STP15 CYL		
2.	805-104C	PIN COTTER 3/16 X 1 1/2 PLT		
3.	805-131C	PIN CLVS 1.0X4.69 USBL		
4.	805-527C	PIN CLVS 1.0X5.19 USBL GR5		
5.	811-063C	EL 3/4MJIC 3/4MORB		
6.	811-091C	EL 3/4MJIC 1 1/16MORB		
7.	811-153C	OREL 1/16 3/4MJIC 3/4MORB		
8.	811-205C	AD 3/4MJIC 1 1/16MORB		
9.	811-744C	CP 1 1/16FORB MALE QUICK		
10.	811-745C	CP 1 1/16FORB FEMALE QUICK		
11.	851-334C	CYL, 2X8X1.12 ROD WLD		
12.	851-335C	HH1/2R2 055 3/4FJIC TC		
13.	851-336C	HH1/2R2 061 3/4FJIC TC		

Hydraulic Cylinder (851-334C)

Applies to AP-STP15

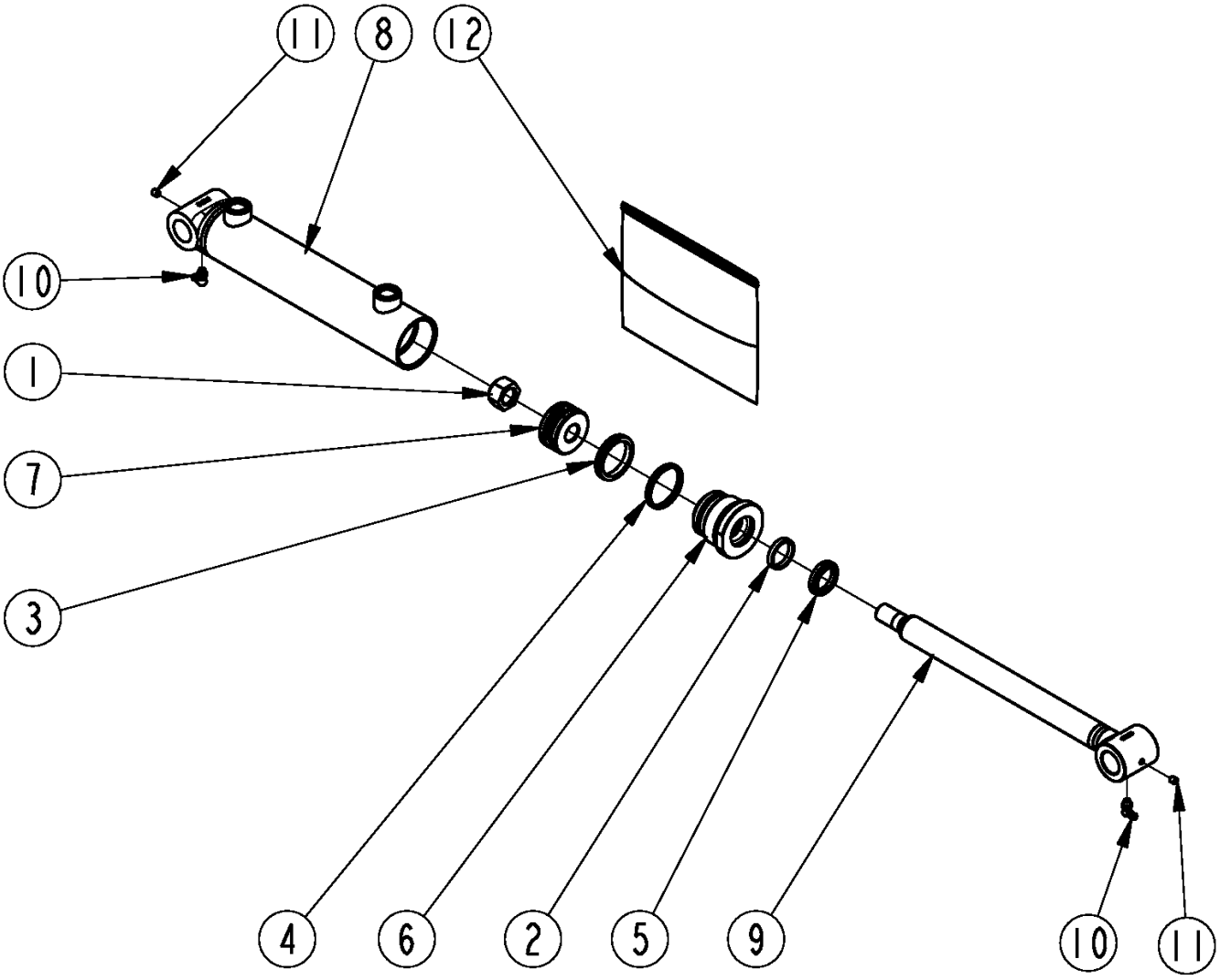

37303

Hydraulic Cylinder (851-334C)

Applies to AP-STP15

Ref.	Part No.	Part Description	Comments	Revision
	Dwg 37303	Drawing Image Number		
	851-334C	CYL, 2X8X1.12 ROD WLD *		
1.	130556	MON PISTON NUT		
2.	n/a	MON SEAL HALLITE 605 ROD 1.13	AVAILABLE IN SEAL KIT # 12	
3.	n/a	MON SEAL PSP PISTON RING 2.00	AVAILABLE IN SEAL KIT # 12	
4.	n/a	MON SEAL DUAL 2.00-.208	AVAILABLE IN SEAL KIT # 12	
5.	n/a	MON SEAL WIPER ROD 1.125 SNAP	AVAILABLE IN SEAL KIT # 12	
6.	258510	MON CYL HEAD 2.00-1.125-THD		
7.	294789	MON PISTON 2.00-0.75 PSP		
8.	470900	MON TUBE WMT 2.00-8.00-WX		
9.	496900	MON ROD WMT 1.12-8.00-.75-WX		
10.	800-073C	GREASE ZERK 1/4-28 X 90-DEG		
11.	801-045C	SCREW SET 1/4-28X1/4 KNL CUP		
12.	850-039C	MON SEAL KIT 644338		

Label Placement

Applies to AP-STP15

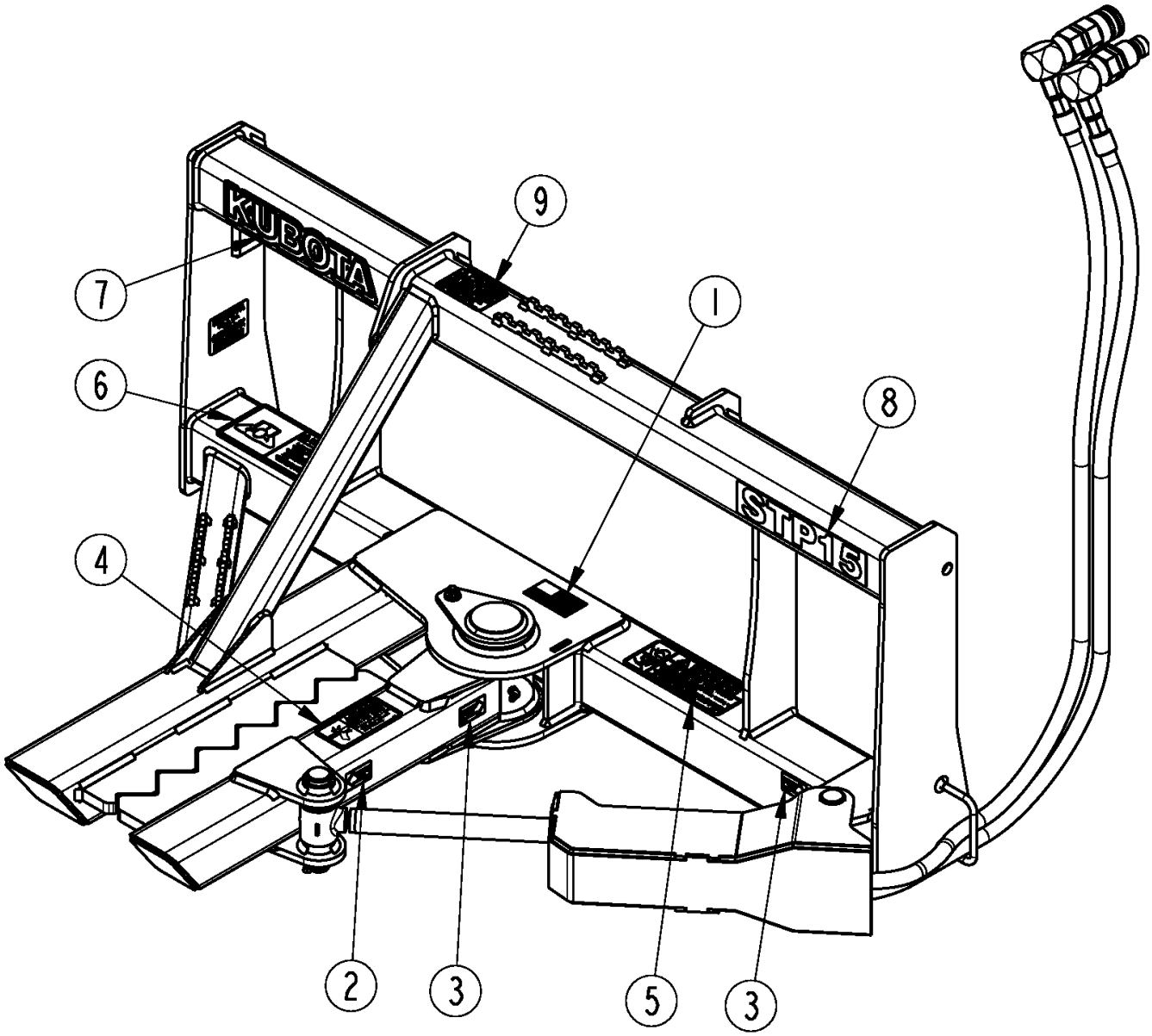

37689

Label Placement

Applies to AP-STP15

Ref.	Part No.	Part Description	Comments	Revision
	Dwg 37689	Drawing Image Number		
1.	818-190C	DECAL FLAG		
2.	818-349C	DECAL GREASE 10 HRS LH		
3.	818-402C	DECAL GREASE 10 HRS RH		
4.	818-798C	DECAL WARNING PINCH POINT GEN		
5.	838-094C	DECAL WARNING HYD PRESS LONG		
6.	838-293C	DECAL WARNING READ MANUAL		
7.	858-398C	DECAL KUBOTA 10"		
8.	858-491C	DECAL STP15 WHITE		
9.	858-696C	DECAL, CAUTION 2000 ROC MAX		

Part Number Index

The Part Number Index is a numeric index of all part numbers included in this manual. The index shows what page(s) the part is used on.

Part Number	Page
130556	11
258510	11
294789	11
328-216H	7
328-217H	7
328-221H	7
328-223H	9
470900	11
496900	11
800-073C	11
800-136C	7
801-045C	11
802-453C	7
803-198C	7
805-104C	9
805-131C	9
805-527C	9
811-063C	9
811-091C	9
811-153C	9
811-205C	9
811-744C	9
811-745C	9
818-190C	13
818-349C	13
818-402C	13
818-798C	13
838-094C	13
838-293C	13
850-039C	11
851-334C	9, 11
851-335C	9
851-336C	9
858-398C	13
858-491C	13
858-696C	13
Dwg 37301	7
Dwg 37302	9
Dwg 37303	11
Dwg 37689	13
n/a	11

This Page Intentionally Left Blank

KUBOTA TRACTOR CORPORATION
3401 Del Amo Blvd., Torrance, CA 90503, U.S.A.
Telephone: (310)370-3370

Western Division: 1175 S. Guild Ave., Lodi, CA 95240
Telephone: (209)334-9910

Central Division: 4855 FAA Blvd., Fort Worth, TX 76155
Telephone: (817)571-0900

Northern Division: 6300 at One Kubota Way, Groveport, OH 43125
Telephone: (614)835-1100

Southeast Division: 1025 Northbrook Parkway, Suwanee, GA 30024
Telephone: (770)995-8855

www.kubota.com