Table of Contents

Skid Steer Rotary Cutters

AP-SC4060 & AP-SC4072

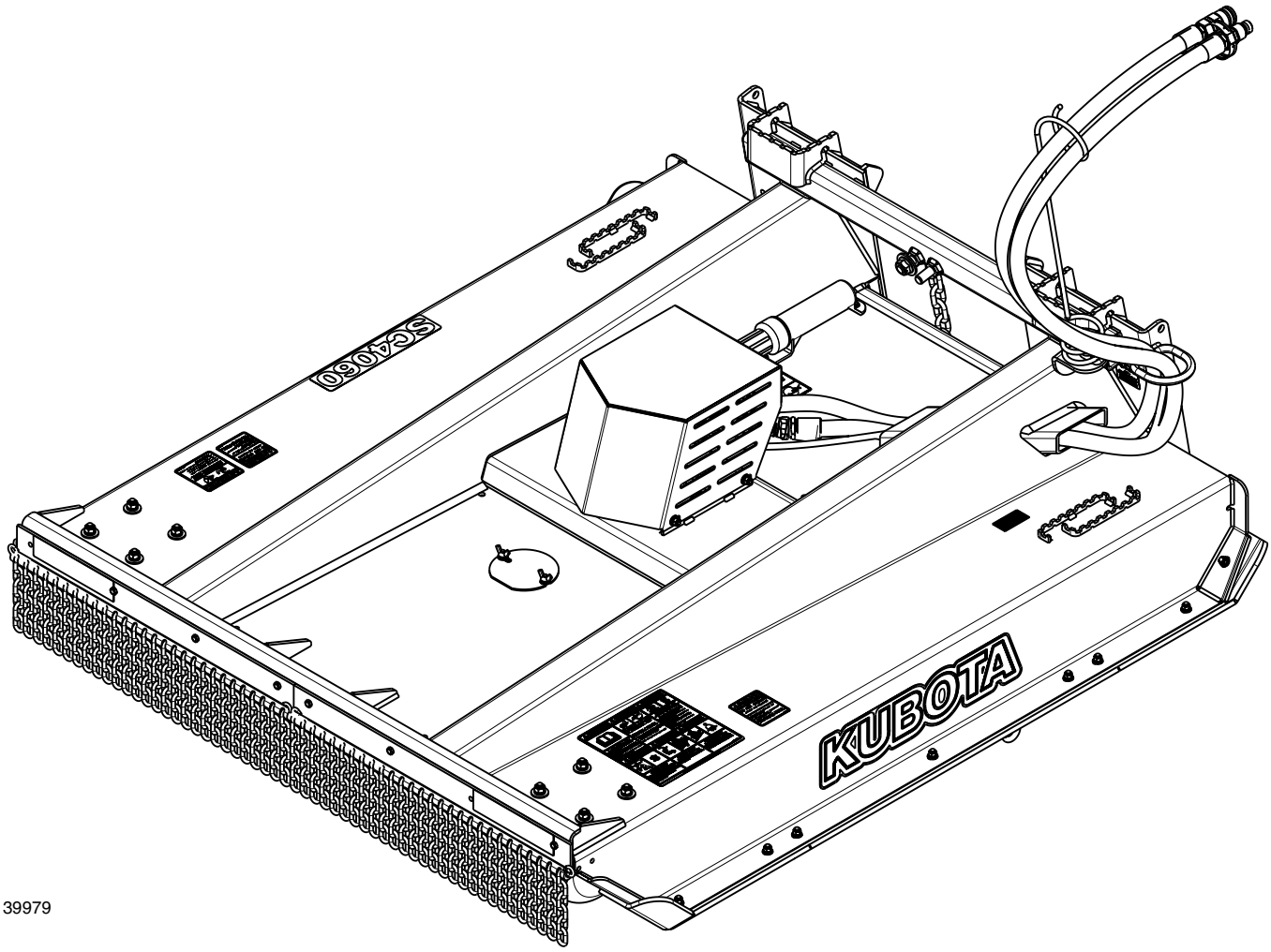

39979

326-765MK
Operator's Manual

Kubota®

Read the Operator's Manual entirely. When you see this symbol, the subsequent instructions and warnings are serious - follow without exception. Your life and the lives of others depend on it!

Cover photo may show optional equipment not supplied with standard unit.

For an Operator's Manual and Decal Kit in French Language, please see your Kubota dealer.

Printed 4/3/24

Machine Identification

Record your machine details in the log below. If you replace this manual, be sure to transfer this information to the new manual.

If you, or the dealer, have added Options not originally ordered with the machine, or removed Options that were originally ordered, the weights and measurements are no longer accurate for your machine. Update the record by adding the machine weight and measurements provided in the Specifications & Capacities Section of this manual with the Option(s) weight and measurements.

Model Number	
Serial Number	
Machine Height	
Machine Length	
Machine Width	
Machine Weight	
Delivery Date	
First Operation	
Accessories	

Dealer Contact Information

Name: _____

Street: _____

City/State: _____

Telephone: _____

Email: _____

California Proposition 65

WARNING: Cancer and reproductive harm - www.P65Warnings.ca.gov

Important Safety Information 1
Safety at All Times 1
Look for the Safety Alert Symbol 1
Safety Labels 6
Introduction 9
Application 9
Using This Manual 9
Terminology 9
Owner Assistance 9
Serial Number 9
Further Assistance 9
Section 1: Assembly & Set-up 10
Skid Steer Requirements 10
Dealer Preparations 10
Uncrating 10
Torque Requirements 10
Skid Steer Shutdown Procedure 11
Front Chain Guards Assembly 11
SC40 Motor And Hose Assembly 12
Hitch Hook-Up 13
Hydraulic Hose Hook-up 14
Front Roller Assembly (Optional) 14
Case Drain Assembly (Optional) 15
Pressure Gauge Assembly (Optional) 16
Protective Door Assembly (Optional) 17
Section 2: Adjustments 18
Height Adjustment Safety Chain 18
Blade Rotation Change 19
Equipment Clearances 19
Section 3: Operating Procedures 20
Operating Checklist 20
Safety Information 20
Transporting 21
Cutting Instructions 22
General Operating Instructions 24
Skid Steer Operating Instructions 24
Rotary Cutter Operating Instructions 24
Section 4: Options & Accessories 26
Front Roller Bundle (Option) 26
Pressure Gauge Bundle (Option) 26
Case Drain Bundle (Option) 26
Narrow Skid Shoe Bundles (Accessory) 26
Motor and Hose Bundles (Option) 27
Polycarbonate Protective Door (Option) 27
Large Flat Face Couplers & Adapters (Accessory) 27
Section 5: Maintenance & Lubrication 28
Maintenance 28
Hydraulic System 28
Cutter Blade Maintenance 29
Skid Shoe Maintenance 30
Long-Term Storage 31
Lubrication Points 32
Front Rollers 32
Motor Spindle Hub 32
Section 6: Specifications & Capacities 33
Section 7: Features & Benefits 35
Section 8: Troubleshooting 36
Section 9: Torque Values Chart 37
Section 10: Legal Disclaimer & Warranty . . . 38

© Copyright 2024 All rights Reserved

Kubota provides this publication “as is” without warranty of any kind, either expressed or implied. While every precaution has been taken in the preparation of this manual, Kubota assumes no responsibility for errors or omissions. Neither is any liability assumed for damages resulting from the use of the information contained herein. Kubota reserves the right to revise and improve its products as it sees fit. This publication describes the state of this product at the time of its publication, and may not reflect the product in the future.

Kubota is a registered trademark.

All other brands and product names are trademarks or registered trademarks of their respective holders.

Printed in the United States of America.

See previous page for Table of Contents.

Parts Manual QR Locator

The QR (Quick Reference) code on the left will take you to the Parts Manual for this equipment. Download the appropriate app on your smart phone. Scan the QR code and take a picture.

Dealer QR Locator

The QR code to the left will link you to available dealers for Kubota products. Refer to Parts Manual QR Locator on this page for detailed instructions.

Listed below are common practices that may or may not be applicable to the products described in this manual.

Safety at All Times

Careful operation is your best assurance against an accident.

All operators, no matter how much experience they may have, should carefully read this manual and other related manuals before operating the power machine and this attachment.

- ▲ Thoroughly read and understand the “Safety Label” section. Read all instructions noted on them.
- ▲ Do not operate the equipment while under the influence of drugs or alcohol, as they impair your ability to safely and properly operate the equipment.
- ▲ Operator should be familiar with all functions of the skid steer and attachment and be able to handle emergencies quickly.
- ▲ Make sure all guards and shields appropriate for the operation are in place and secured before operating the attachment.
- ▲ Keep all bystanders away from equipment and work area.
- ▲ Start skid steer from the driver’s seat with steering levers and hydraulic controls in neutral.
- ▲ Operate skid steer and controls from the driver’s seat only.
- ▲ Never dismount from a moving skid steer or leave the skid steer unattended with the engine running.
- ▲ Do not allow anyone to stand between the attachment and skid steer while connecting to the attachment.
- ▲ Keep hands, feet, and clothing away from power-driven parts.
- ▲ While transporting and operating equipment, watch out for objects overhead and along the sides such as fences, trees, buildings, wires, etc.
- ▲ Store attachment in an area where children normally do not play. When needed, secure attachment against falling with support blocks.

Look for the Safety Alert Symbol

The SAFETY ALERT SYMBOL indicates there is a potential hazard to personal safety and extra precaution must be taken. When you see this symbol, be alert and carefully read the message that follows it. Hazard control, and accident prevention are dependent upon the awareness, concern, prudence, and proper training of personnel involved in the operation, transport, maintenance, and storage of equipment.

Be Aware of Signal Words

A signal word designates a degree or level of hazard seriousness. They are:

DANGER: Indicates a hazardous situation that, if not avoided, will result in death or serious injury.

WARNING: Indicates a hazardous situation that, if not avoided, could result in death or serious injury.

CAUTION: Indicates a hazardous situation that, if not avoided, may result in minor or moderate injury.

Be Aware of Special Notices

Special notices are intended to point out important and helpful information that should be followed. They are usually placed inside a box. They are:

IMPORTANT: Indicates that equipment or property damage could result if instructions are not followed.

NOTE: Indicates supplementary explanations that will be helpful when using the equipment.

Safety Precautions for Children

Tragedy can occur if the operator is not alert to the presence of children. Children generally are attracted to attachments and their work.

- ▲ Never assume children will remain where you last saw them.
- ▲ Keep children out of the work area and under the watchful eye of a responsible adult.
- ▲ Be alert and shut the attachment and skid steer/track loader down if children enter the work area.
- ▲ Never carry children on the power machine or attachment. There is not a safe place for them to ride. They may fall off and be run over or interfere with the control of the power machine.
- ▲ Never allow children to operate the power machine, even under adult supervision.
- ▲ Never allow children to play on the power machine or attachment.
- ▲ Use extra caution when backing up. Before the power machine starts to move, look down and behind to make sure the area is clear.

Skid Steer Shutdown And Storage

- ▲ Reduce engine speed and shut-off all power to the attachment.
- ▲ Park on solid, level ground and lower attachment until it is flat on the ground or on non-concrete support blocks.
- ▲ Turn off engine. Do not remove ignition key at this time.
- ▲ Turn ignition key to the “RUN” position. Relieve all hydraulic pressure by moving both joysticks.
- ▲ Turn ignition key to Off and remove to prevent unauthorized starting.
- ▲ If included, raise seat bar and move controls until both lock.
- ▲ Wait for all components to stop before leaving operator’s seat.
- ▲ Use steps, grab-handles and anti-slip surfaces when stepping on and off the skid steer.

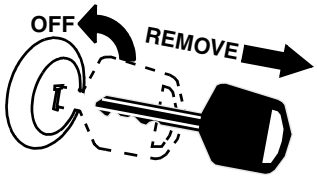

Listed below are common practices that may or may not be applicable to the products described in this manual.

Dig Safe - Avoid Underground Utilities

- ▲ USA: Call 811
  CAN:
  http://www.clickbeforeyoudig.com
- ▲ Always contact your local utility companies (electrical, telephone, gas, water, sewer, and others) before digging so that they may mark the location of any underground services in the area.
- ▲ Be sure to ask how close you can work to the marks they positioned.

Towing Safely

- ▲ Comply with federal, state, and local laws.
- ▲ Use towing vehicle and trailer of adequate size and capacity. Secure equipment towed on a trailer with chocks, tie downs, and chains.
- ▲ **IMPORTANT:** Do not tow a load that is more than double the weight of the vehicle towing the load.
- ▲ Sudden braking can cause a towed trailer to swerve unexpectedly. Reduce speed if trailer is not equipped with brakes.

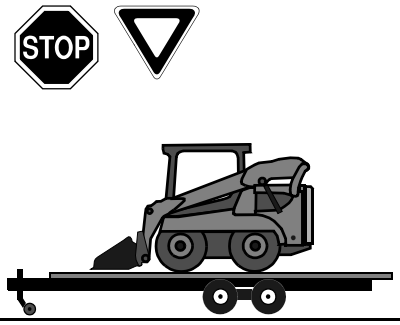

Transport Safely

- ▲ Comply with federal, state, and local laws.
- ▲ Avoid contact with any overhead utility lines or electrically charged conductors.
- ▲ Always drive with attachment on the end of the loader arms low to the ground.
- ▲ Follow recommendations in the power machine Operator's Manual when driving uphill or downhill and when parking on an incline.
- ▲ Never travel at a speed which does not allow adequate control of the load, steering, and stopping. Some rough terrains require a slower speed.

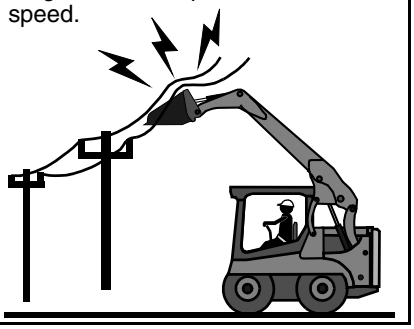

Tire Safety

- ▲ Tire changing can be dangerous and must be performed by trained personnel using the correct tools and equipment.
- ▲ Always properly match the wheel size to the properly sized tire.
- ▲ Always maintain correct tire pressure. Do not inflate tires above recommended pressures shown in the Operator's Manual.
- ▲ When inflating tires, use a clip-on chuck and extension hose long enough to allow you to stand to one side and NOT in front of or over the tire assembly. Use a safety cage if available.
- ▲ Securely support the attachment when changing a wheel.
- ▲ When removing and installing wheels, use wheel handling equipment adequate for the weight involved.
- ▲ Make sure wheel bolts have been tightened to the specified torque.

Practice Safe Maintenance

- ▲ Understand procedure before doing work. Refer to the Operator's Manual for additional information.
- ▲ Work on a level surface in a clean, dry area that is well-lit.
- ▲ Lower attachment to the ground and follow all shutdown procedures before leaving the operator's seat to perform maintenance.
- ▲ Do not work under any hydraulically supported equipment. It can settle, suddenly leak down, or be lowered accidentally. If it is necessary to work under the equipment, securely support it with stands or suitable blocking beforehand.
- ▲ Use properly grounded electrical outlets and tools.
- ▲ Use correct tools and equipment for the job that are in good condition.
- ▲ Allow equipment to cool before working on it.
- ▲ Disconnect battery ground cable (-) before servicing or adjusting electrical systems or before welding on equipment.
- ▲ Inspect all parts. Make certain that parts are in good condition & installed properly.
- ▲ Replace parts on this attachment with genuine Kubota parts only. Do not alter this attachment in a way which will adversely affect its performance.
- ▲ Do not grease or oil attachment while it is in operation.
- ▲ Remove buildup of grease, oil, or debris.
- ▲ Always make sure any material and waste products from the repair and maintenance of the attachment are properly collected and disposed.
- ▲ Remove all tools and unused parts from the equipment before operation.

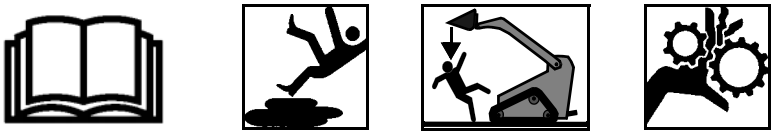

These are common practices that may or may not be applicable to the products described in this manual.

Prepare for Emergencies

- ▲ Be prepared if a fire starts.
- ▲ Keep a first aid kit and fire extinguisher handy.
- ▲ Keep emergency numbers for doctor, ambulance, hospital, and fire department near phone.

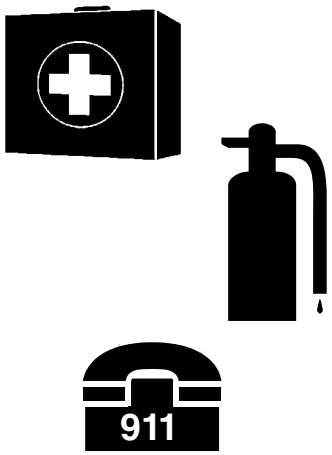

Wear Personal Protective Equipment (PPE)

- ▲ Wear protective clothing and equipment appropriate for the job such as safety shoes, safety, glasses, hard hat, dust mask, and ear plugs.
- ▲ Clothing should fit snug without fringes and pull strings to avoid entanglement with moving parts.
- ▲ Prolonged exposure to loud noise can cause hearing impairment or hearing loss. Wear suitable hearing protection such as earmuffs or earplugs.
- ▲ Operating a machine safely requires the operator's full attention. Avoid wearing headphones while operating equipment.

Avoid High Pressure Fluids

- ▲ Escaping fluid under pressure will penetrate the skin or eyes causing serious injury.
- ▲ Relieve all residual pressure before disconnecting hydraulic lines or performing work on the hydraulic system.
- ▲ Make sure all hydraulic fluid connections are properly tightened/torqued and all hydraulic hoses and lines are in good condition before applying pressure to the system.
- ▲ Use a piece of cardboard or wood, NOT BODY PARTS, to check for suspected leaks.
- ▲ Wear protective gloves and safety glasses or goggles when working with hydraulic systems.
- ▲ **DO NOT DELAY.** If an accident occurs, seek immediate emergency medical care or gangrene may result.

Use Safety Lights and Devices

- ▲ A slow moving power machine can create a hazard when driven on public roads. They are difficult to see, especially at night.
- ▲ Flashing warning lights and turn signals are recommended whenever driving on public roads.
- ▲ For tractors and other agriculture equipment, a Slow Moving Vehicle (SMV) sign is required when traveling on public roads.

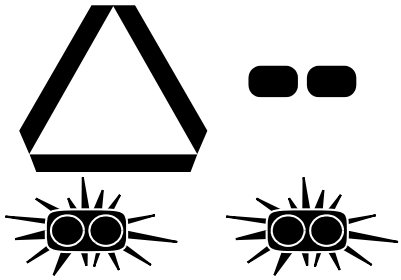

Use Seat Belt and ROPS

- ▲ Land Pride recommends the use of a CAB or roll-over-protective-structures (ROPS) and seat belt in almost all power machines. Combination of a CAB or ROPS and seat belt will reduce the risk of serious injury or death if the power machine should be upset.
- ▲ If ROPS is in the locked-up position, fasten seat belt snugly and securely to help protect the operator against serious injury or death from falling and/or machine overturn.

Keep Riders Off Machinery

- ▲ Never carry riders on the power machine or attachment.
- ▲ Riders obstruct operator's view and interfere with the control of the power machine.
- ▲ Riders can be struck by objects or thrown from the equipment.
- ▲ Never use the power machine or attachment to lift or transport riders.

Listed below are common practices that may or may not be applicable to the products described in this manual.

Avoid Crystalline Silica (Quartz) Dust

Because crystalline silica is a basic component of sand and granite, many activities at construction sites produce dust containing crystalline silica. Trenching, sawing, and boring of material containing crystalline silica can produce dust containing crystalline silica particles. This dust can cause serious injury to the lungs (silicosis).

There are guidelines which should be followed if crystalline silica (quartz) is present in the dust.

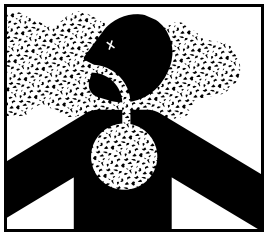

- ▲ Be aware of and follow OSHA (or other local, State, or Federal) guidelines for exposure to airborne crystalline silica.
- ▲ Know the work operations where exposure to crystalline silica may occur.
- ▲ Participate in air monitoring or training programs offered by the employer.
- ▲ Be aware of and use optional equipment controls such as water sprays, local exhaust ventilation, and enclosed cabs with positive pressure air conditioning if the machine has such equipment. Otherwise respirators shall be worn.
- ▲ Where respirators are required, wear a respirator approved for protection against crystalline silica containing dust. Do not alter respirator in any way. Workers who use tight-fitting respirators can not have beards/ mustaches which interfere with the respirator seal to the face.
- ▲ If possible, change into disposable or washable work clothes at the work site; shower and change into clean clothing before leaving the work site.
- ▲ Do not eat, drink, use tobacco products, or apply cosmetics in areas where there is dust containing crystalline silica.
- ▲ Store food, drink, and personal belongings away from the work area.
- ▲ Wash hands and face before eating, drinking, smoking, or applying cosmetics after leaving the exposure area.

Handle Chemicals Properly

- ▲ Protective clothing should be worn.
- ▲ Handle all chemicals with care.
- ▲ Follow instructions on container label.
- ▲ Agricultural chemicals can be dangerous. Improper use can seriously injure persons, animals, plants, soil, and property.
- ▲ Inhaling smoke from any type of chemical fire can be a serious health hazard.
- ▲ Store or dispose of unused chemicals as specified by the chemical manufacturer.

This page left blank intentionally.

Safety Labels

Your Rotary Cutter comes equipped with all safety labels in place. They are designed to help you safely operate your attachment. Read and follow their directions.

1. *Keep all safety labels clean and legible.*
2. *Refer to this section for proper label placement. Replace all damaged or missing labels. Order new labels from your nearest Kubota dealer. To find your nearest dealer, visit our dealer locator at www.landpride.com.*
3. *Some new equipment installed during repair requires safety labels to be affixed to the replaced component as specified by Kubota. When ordering new components make sure the correct safety labels are included in the request.*
4. *Refer to this section for proper label placement.*
   To install new labels:
   a. *Clean surface area where label is to be placed.*
   b. *Spray soapy water onto the cleaned area.*
   c. *Peel backing from label and press label firmly onto the surface.*
   d. *Squeeze out air bubbles with edge of a credit card or with a similar type of straight edge.*

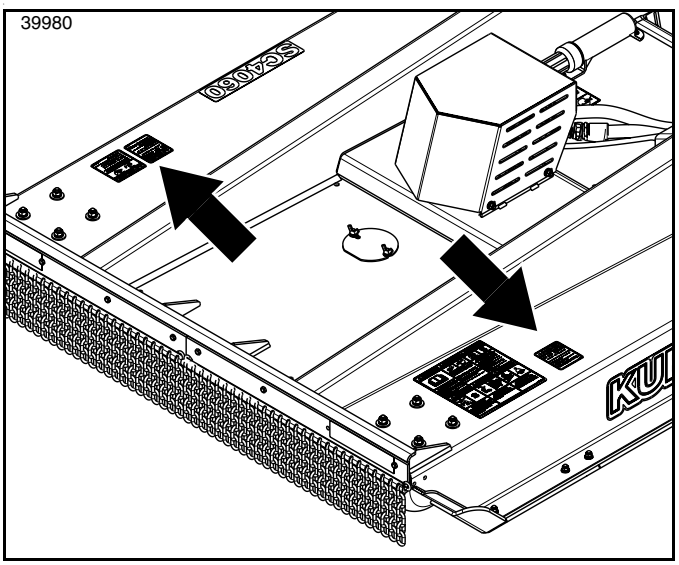

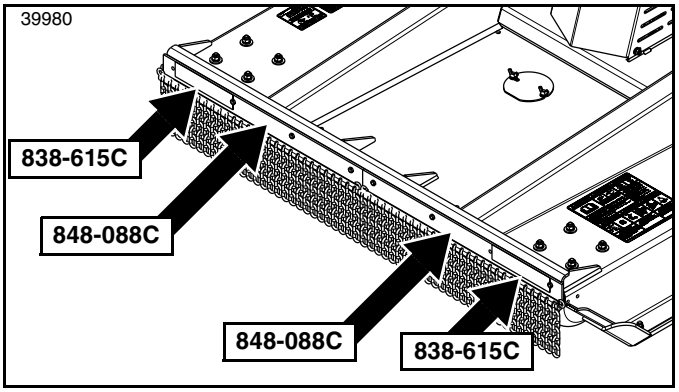

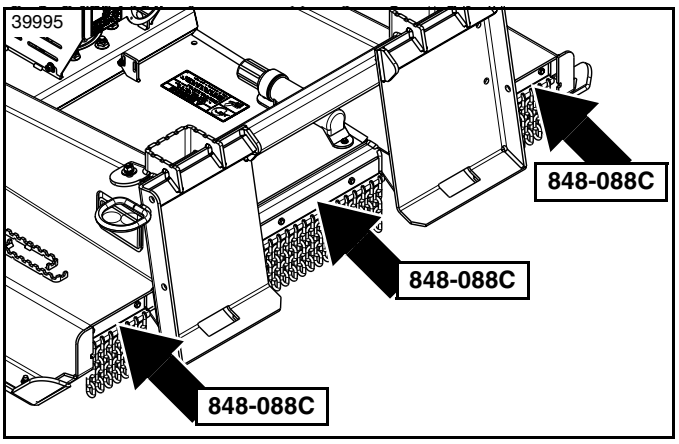

70397

858-843C

Danger: Missing Guards, Polycarbonate Door, and/or Check Chain Safety Hazard

2 Places: On both sides of the deck

73138

838-615C

Amber Reflector: 2" x 9"

2 Places: On both ends of the front chain guard

70252

848-088C (5 Places)

Danger: Guard Missing Hazard, Do Not Operate

2 Places: Reference middle illustration. Behind the two front chain guards

3 places: Reference bottom illustration. Behind the three rear chain guards

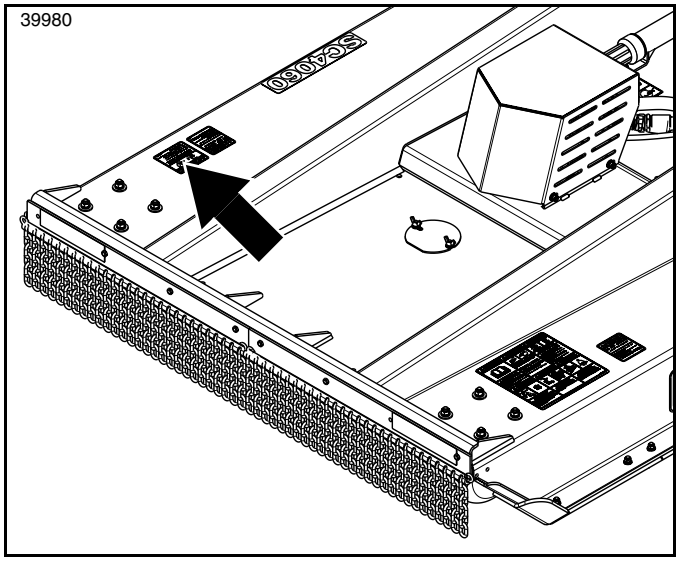

70266

818-555C

Danger: Rotating Blade Hazard

1 Place: On the right-hand side of the deck

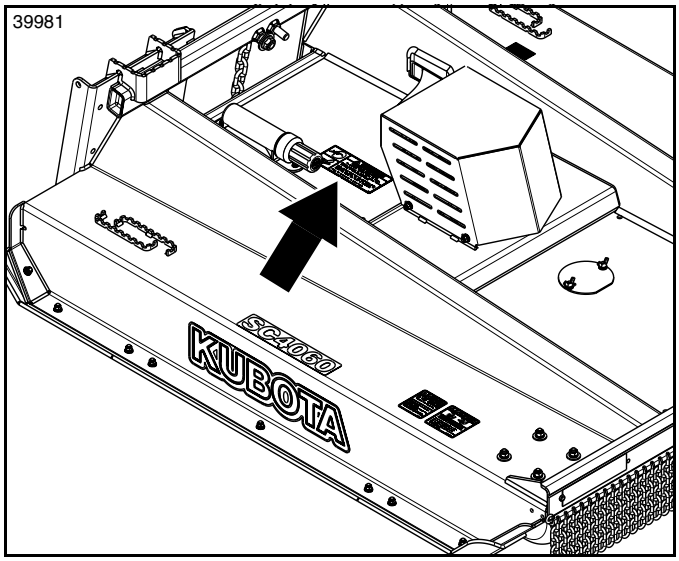

70659

818-831C

Warning: High Pressure Fluid Hazard

1 Place:

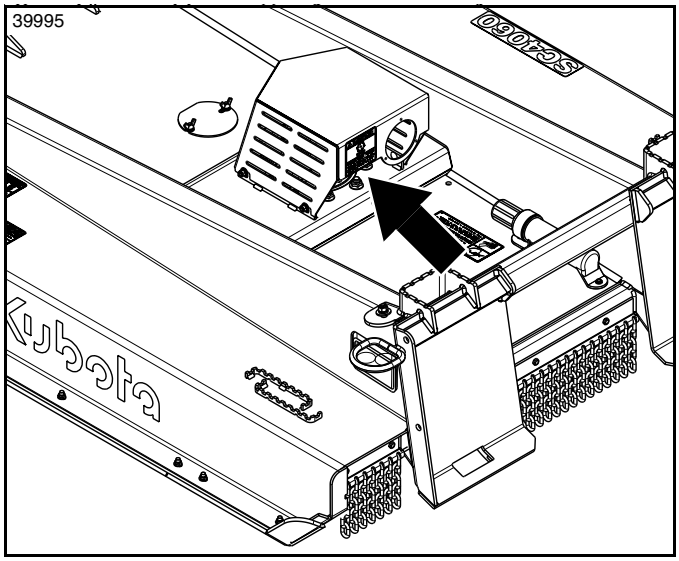

76601

844-317C

Danger: Rotating Blades Hazard

1 Place: On the hydraulic motor cover

72929

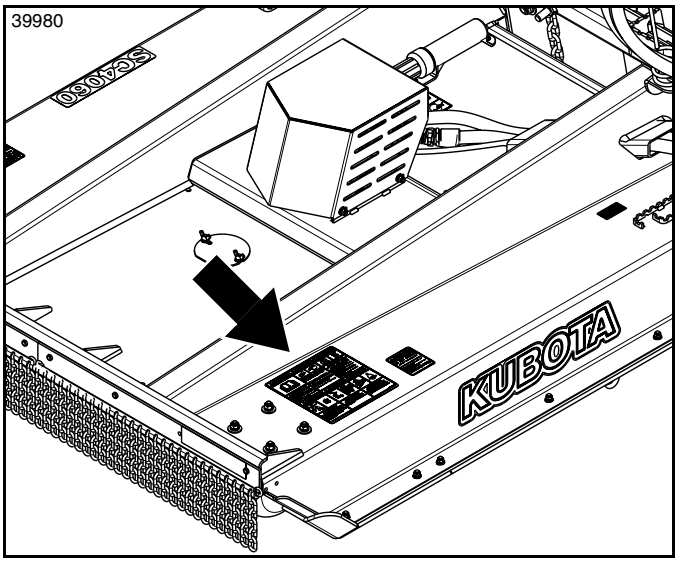

844-191C

Danger/Warning Safety Combo: List of Safety Hazards

1 Place:

Kubota welcomes you to the growing family of new product owners. This Skid Steer Rotary Cutter has been designed with care and built by skilled workers using quality materials. Proper assembly, maintenance, and safe operating practices will help you get years of satisfactory use from this product.

Application

SC4060 & SC4072 construction grade cutters are designed with the commercial or high use consumer in mind. The SC40 cutter features a rigid mounting system, 1/4" (6 mm) thick deck, 3 swinging blades and a solid blade carrier allowing it to cut and shred brush or trees up to 4" (10 cm) in diameter. The strong, reinforced leading edge of the SC40 cutter allows the operator to push trees and brush over without damaging the unit. The 2" (5 cm) to 18" (46 cm) cut height range makes this cutter ideal for clearing right-of-ways along road sides, pipelines or under electrical transmission lines with the speed and efficiency needed by today's contractors. Farmers, ranchers and land developers will also benefit from this unit when clearing pastures or new development areas. The SC40 cutter utilizes the power, compact size and the go anywhere ability of a skid steer or CTL to access over grown areas where a tractor and rotary cutter cannot go. The front roller option along with the aggressive taper on the standard full length skid shoes prevent the cutter from digging in or getting hung up in the soft ground usually found under heavy brush.

See **"Specifications & Capacities"** on page 33 and **"Features & Benefits"** on page 35 for additional information and performance enhancing options.

Using This Manual

- This Operator's Manual is designed to help familiarize you with safety, assembly, operation, adjustments, troubleshooting, and maintenance. Read this manual and follow the recommendations to help ensure safe and efficient operation.
- The information contained within this manual was current at the time of printing. Some parts may change slightly to assure you of the best performance.
- To order a new Operator's or Parts Manual, contact your authorized dealer. Manuals can also be downloaded, free-of-charge, from our website at www.landpride.com
- Store your Operator's Manual in the dry storage tube. See Figure 1 for location of storage tube.

Terminology

"Right" or "left" as used in this manual is determined by the direction the operator faces while sitting looking forward in the operator's seat unless otherwise stated.

Owner Assistance

The dealer should complete the Online Warranty Registration at the time of purchase. This information is necessary to provide you with quality customer service.

The parts on your Rotary Cutter have been specially designed by Kubota/Land Pride and should only be replaced with genuine Kubota parts. Contact a Kubota dealer if customer service or repair parts are required. Your Kubota dealer has trained personnel, repair parts, and equipment needed to service the attachment.

Serial Number

For quick reference and prompt service, record model and serial number on the inside cover page and again on the warranty page. Always provide model number and serial number when ordering parts and in all correspondences with your Kubota dealer. For location of your serial number plate, see Figure 1.

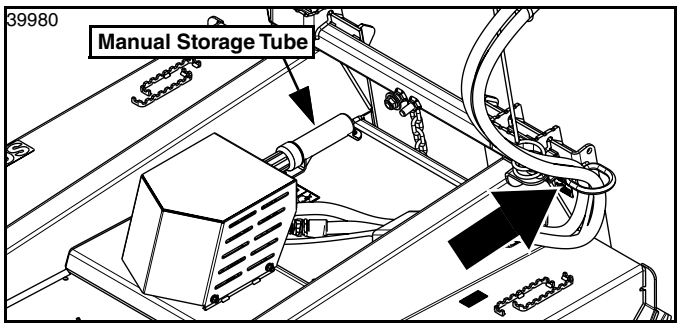

Serial Number Plate Location
Figure 1

Further Assistance

Your Kubota dealer wants you to be satisfied with your new attachment. If for any reason you do not understand any part of this manual or are not satisfied with the service received, the following actions are suggested:

1. Discuss any problems you have with your attachment with your dealership service personnel so they can address the problem.
2. If you are still not satisfied, seek out the owner or general manager of the dealership, explain the question/problem, and request assistance.
3. For further assistance write to:

Kubota by Land Pride
Service Department

1525 East North Street
P.O. Box 5060
Salina, Ks. 67402-5060

E-mail address
lpservicedept@landpride.com

Skid Steer Requirements

The Rotary Cutter is designed to attach to skid steer loaders and track loaders with the following minimum requirements:

Hitch type . . . . . SAE approved skid steer quick attach
SAE Lift Capacity . . . . . 2000 lbs (907.2 kg)
Hydraulic Pressure Rating . . . . . .1500 - 3500 psi (10.3-24.1 MPa)
Standard Volume Motor . . 15-26 gpm (56.8-98.4 lpm)
High Volume Motor . . . . .27-43 gpm (102.2-162.8 lpm)
Case Drain . . . . . Optional
Skid Steer Weight. . . . . See warning below
Protective Operator Door[1] . . . . . Polycarbonate

Notes:

1. A polycarbonate door can be purchased from your nearest Kubota dealer. Refer to **"Polycarbonate Protective Door (Option)"** on page 27.

WARNING

To avoid serious injury or death:

- *Lightweight power machines may need weight added to the rear to maintain steering control and prevent forward and/or side tipping. Consult your power machine Operator's Manual to determine proper weight requirements and maximum limitations.*
- *To protect the operator from thrown objects, the skid steer or track loader MUST be equipped with a polycarbonate protective door, and the operator MUST wear eye protection such as safety glasses or goggles.*
- *Consult your skid steer's manual for operating capacity, lifting capacity, and operating specifications. Exceeding rated capacities and specifications can result in a roll-over or other serious hazard.*
- *Allow only persons to operate this attachment who have fully read and comprehended this manual, and who have been properly trained in the safe operation of this attachment. Serious injury or death can result from failure to read, understand, and follow instructions provided in this manual.*

Dealer Preparations

Read and understand the Operator's Manual for this cutter. An understanding of how it works will aid in the assembly and setup of your cutter.

This Rotary Cutter has been partially assembled at the factory. However, some assembly will be necessary.

It is best to go through the **"Pre-Assembly Checklist"** on this page before assembling the cutter. Speed up your assembly task and make the job safer by having all the needed parts and equipment readily at hand.

Ensure that the intended skid steer conforms to the requirements stated under the heading **"Skid Steer Requirements"** on this page.

Uncrating

WARNING

To avoid serious injury or death:

Always secure cutter with an overhead crane, fork lift, or other suitable lifting device before removing hardware bags, shipping components, bands, lag screws, or hitch pins. The cutter can suddenly fall.

1. Secure deck with an overhead crane, fork lift, or other suitable means before cutting shipping support bands and unbolting cutter from shipping crate.
2. Cut bands securing parts bags to the shipping crate.
3. Remove bolts securing hitch to the shipping crate.
4. Cut center band securing hitch to shipping crate.
5. Carefully lift cutter from crate and lower onto its skids or onto support stands capable of supporting the cutter.
6. Remove remaining components from crate. Discard crate.

Torque Requirements

See **"Torque Values Chart"** on page 37 to determine correct torque values when tightening hardware. See **"Additional Torque Values"** at bottom of chart.

Pre-Assembly Checklist

✔	Check
☐	Have a forklift or hoist with properly sized chains and safety stands capable of lifting and supporting the equipment on hand.
☐	Make sure miscellaneous assembly of tools are on hand: Hammer, tape measure, spirit level, and an assortment of wrenches and power tools.
☐	Have a minimum of 2 people on hand while assembling.
☐	Check power machine to see if auxiliary weights are needed. See Specifications on page 33 for unit weights.
☐	Make sure loose parts bag/box is shipped with the cutter.
☐	All hardware from the factory has been installed. If a part or fastener is temporarily removed for assembly, remember where it goes. Keep parts separated.
☐	Make sure all components have been installed correctly. If removing, keep the part and its hardware together. Remember how to reassemble the part. If unsure, use the Parts Manual to assist. To acquire an Operator's or Parts Manual, refer to "Using This Manual" on page 9.
☐	Make sure all safety labels are legible and correctly located. Reflectors must be visible when machine is in transport position. Replace damaged safety labels and reflectors. Refer to Page 6.
☐	Make sure the front rollers ar lubricated. Refer to "Front Rollers" on page 32.
☐	Check fluid level in the motor spindle hub. Refer to "Motor Spindle Hub" on page 32.

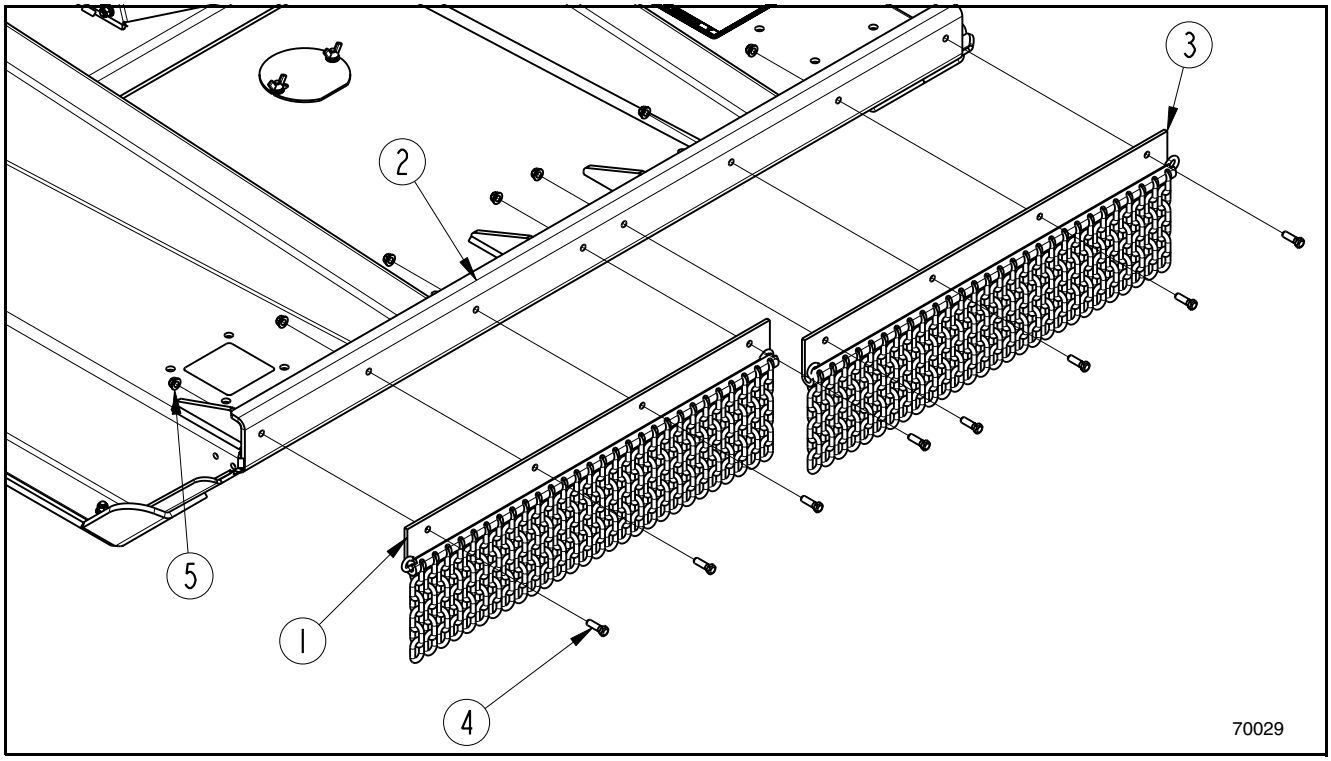

SC4060 & SC4072 Front Chain Guard Assembly
Figure 1-1

Skid Steer Shutdown Procedure

The following are basic skid steer shutdown procedures. Follow these procedures and any additional shutdown procedures provided in your skid steer Operator's Manual before leaving the operator's seat.

1. Reduce engine speed and shut-off all power to the attachment.
2. Park on solid, level ground and lower attachment until it is flat on the ground or on non-concrete support blocks.
3. Turn off engine. Do not remove ignition key at this time.
4. Turn ignition key to the "RUN" position and relieve all hydraulic pressure by moving both joysticks.
5. Turn ignition key off and remove to prevent unauthorized starting.
6. If included, raise seat bar and move controls until both lock.
7. Wait for all components to come to a complete stop before leaving the operator's seat.
8. Use steps, grab-handles and anti-slip surfaces when stepping on and off the skid steer or attachment.

Front Chain Guards Assembly

***Refer to* Figure 1-1:**

DANGER

To avoid serious injury or death:

Rotary Cutters have the ability to discharge objects at high speeds; therefore, the use of front & rear safety guards is mandatory with this cutter. Stop blade rotation if bystanders are in or around the area. It is recommended that a safety shield be placed between the operator and cutter on an open air tractor.

1. Install front chain guard (#1) as shown with four 3/8"-16X1 1/4" bolts (#4).
2. Insert 3/8"-16X1 1/4" bolts (#4) through chain guard (#1) and through the cutter's front bar (#2).
3. Secure 3/8"-16X1 1/4" bolts (#4) with four flanged locknuts (#5)
4. Repeat steps 1 through 3 for chain guard (#3)
5. Tighten nuts to correct torque.

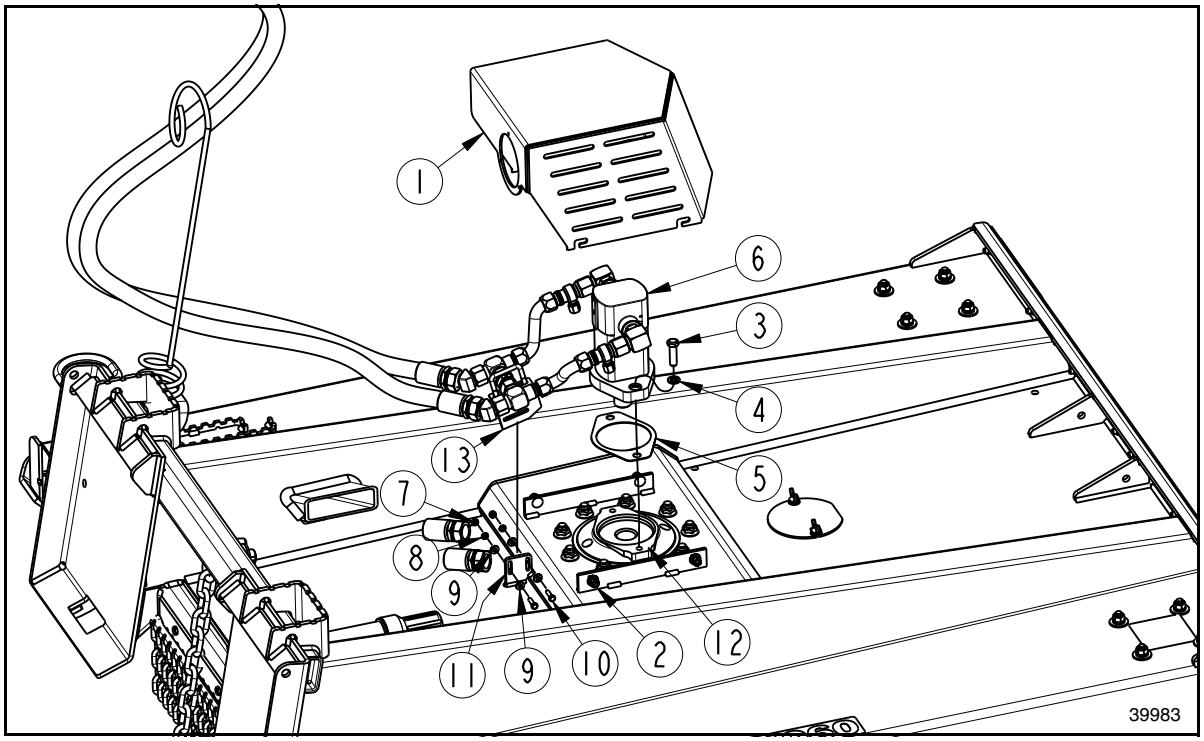

SC4060 & SC4072 Motor and Hose Assembly
Figure 1-2

SC40 Motor And Hose Assembly

Your skid steer Rotary Cutter is factory supplied with one of two motors mounted to the deck. Make sure you check gpm rating on the hydraulic motor decal to verify it matches your skid steer's gpm rating. Skip assembly instructions below if the motor gpm rating matches your skid steer.

See **"Motor and Hose Bundles (Option)"** on page 27 to properly select a motor that matches your skid steer. Contact your Kubota dealer to order the motor.

Refer to Figure 1-2:

1. Loosen four 3/8"-16 hex nuts (#2). Removing the hex nuts is not necessary.
2. Remove the motor shroud (#1) by pushing it toward the front of the unit then lifting it upward.
3. Remove two 1/2"-13X1 3/4" bolts (#3) and lock washers (#4).
4. Remove 1/4"-20X1" bolts (#10), hex nuts (#7) & washers (#8 & 9) from hose clamp support (#11).
5. Remove existing motor and hose assembly (#6). Clean old gasket (#5) from gearbox flange (#12).
6. Place new gasket (#5) onto gearbox flange (#12).
7. Gently lower new motor and hose assembly (#6) onto gasket (#5) with hoses extending toward the hitch plate.

IMPORTANT: Route hydraulic hoses through designated areas as shown in Figure 1-3.

8. Secure new hydraulic motor assembly with two 1/2"-13X1 3/4" bolts (#3) and lock washers (#4). Tighten to correct torque.
9. Re-attach hose clamp (#13) to hose clamp support (#11) with 1/4"-20X1" bolts (#10), hex nuts (#7) & washers (#8 & 9). Tighten to correct torque.
10. Place the motor shroud back in its designated place and pull back to lock it in place. Tighten hex nuts (#2) to correct torque.

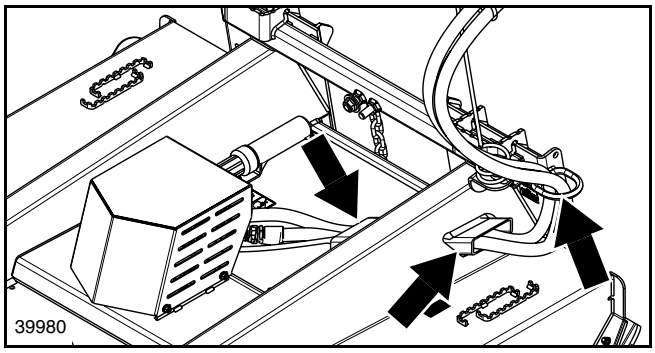

SC4060 & SC4072 Hose Routing
Figure 1-3

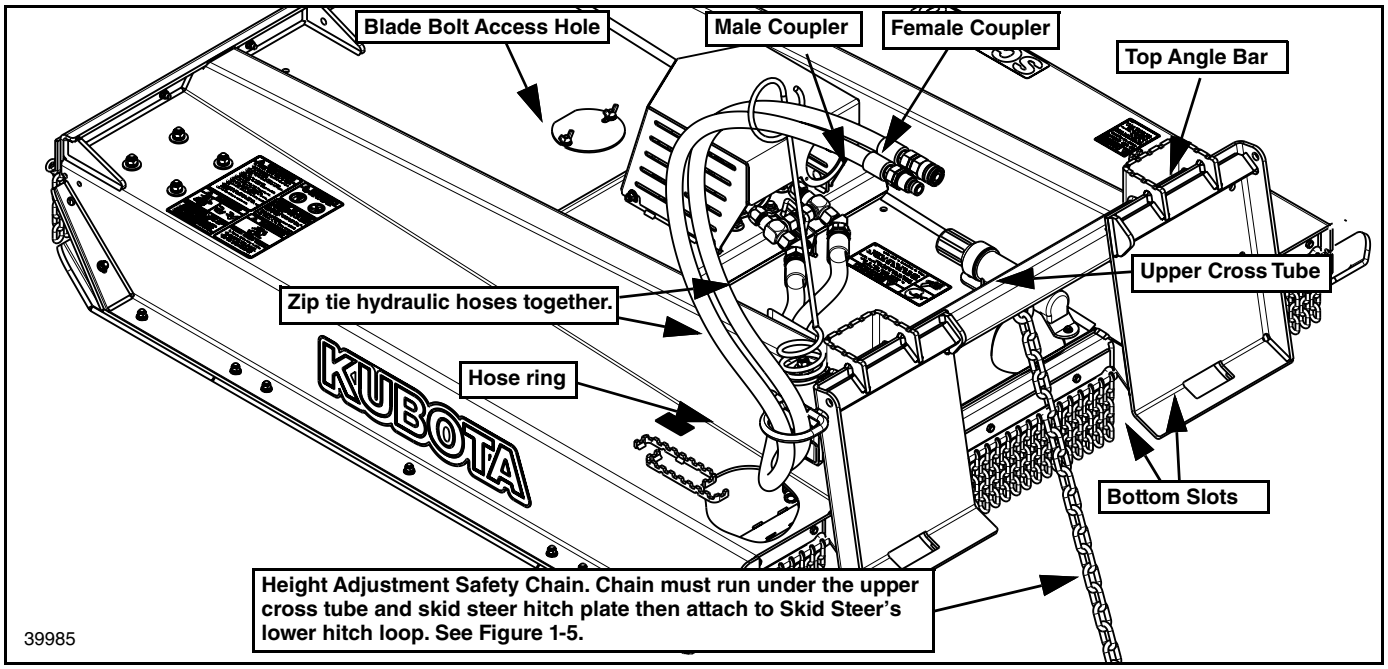

Skid Steer Hook-Up
Figure 1-4

Hitch Hook-Up

Refer to Figure 1-4:

⚠ DANGER

To avoid serious injury or death:

A crushing hazard exists when connecting and disconnecting the attachment. Do not allow anyone to stand between attachment and power machine while approaching or backing away from the attachment. Do not operate hydraulic controls while someone is near the power machine and/or attachment.

1. Make sure hydraulic hoses and height adjustment safety chain do not interfere with hitch hook-up.
2. Drive skid steer slowly to the Rotary Cutter making sure the front hitch plate of the skid steer is parallel with the Rotary Cutter hitch.
3. Tilt top of skid steer hitch plate slightly forward.
4. Place top of skid steer hitch plate directly under the Rotary Cutter top angle bar.
5. Slowly lift skid steer hitch until it fully contacts the Rotary Cutter top angle bar.
6. Slowly rotate skid steer hitch plate back.
7. Push lock handles of the skid steer down ensuring the pins go through the bottom slots of the Rotary Cutter's hitch and the handles lock down.
8. Run the height adjustment safety chain under the upper cross tube and under the skid steer hitch plate (See Figure 1-5). Attach to skid steer's lower hitch loop (See Figure 2-2 on page 18).
9. For additional information on how to adjust the safety chain see **"Height Adjustment Safety Chain"** on page 18.

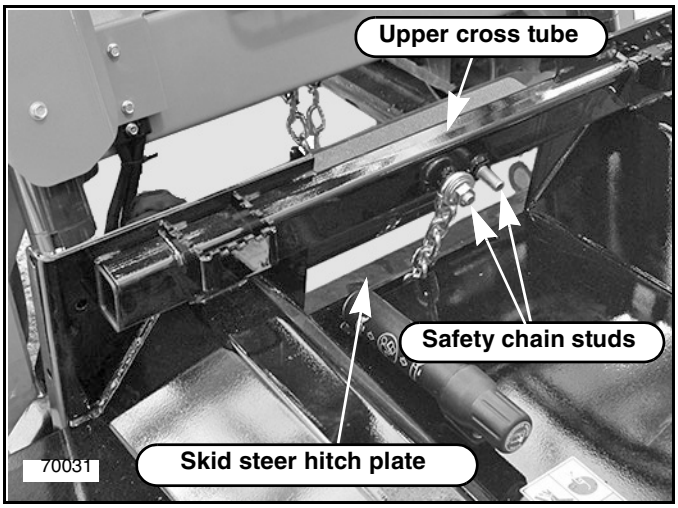

Height Adjustment Safety Chain (Kubota SVL Shown)
Figure 1-5

IMPORTANT: Some skid steers have two hitch loops and require two safety chains. The upper cross tube has two safety chain studs to accommodate a second chain.

IMPORTANT: The safety chain must run under the upper cross tube and the skid steer hitch plate or damage can occur.

Hydraulic Hose Hook-up

Refer to Figure 1-4 on page 13:

IMPORTANT: Customer to select best way to route hydraulic hoses. Make sure hoses will not contact the skid steer wheels or tracks. See **"Equipment Clearances"** on page 19 for detailed instructions on how to check for clearances.

Refer to Figure 1-6:

1. If attaching to a Kubota SVL or SSV machine, be sure to route hydraulic hoses through hose loop (#1) on the left side of the cutter hitch as shown.

NOTE: Use of Kubota's SVL Hose Stay is not recommended for this attachment.

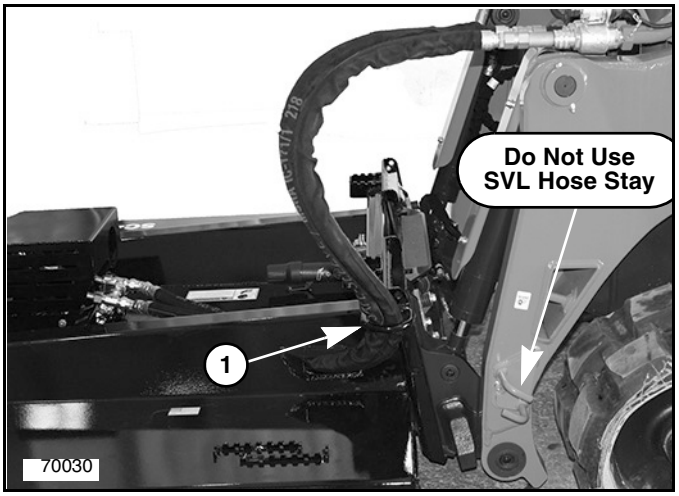

Hose Route For Kubota SVL or SSV Machine (SVL Shown)
Figure 1-6

Refer to Figure 1-4 on page 13:

2. Thread hoses through any hose holders that may be helpful on the machine operating the cutter. See your skid steer Operator's Manual for instruction on how to use these hose holders.
3. Connect male and female couplers on the cutter to the appropriate skid steer flat faced couplers.
4. Operate skid steer to check blade rotation. The SC40 is designed to have cutter blades rotate clockwise or counter clockwise.
5. Zip tie hydraulic hoses together every 2 feet (61 cm) from male and female couplers.

Front Roller Assembly (Optional)

Refer to Figure 1-7:

1. Raise the cutter and secure with support blocks.
2. Insert four 1/2"-13X1 1/2" carriage bolts (#5) through the square holes in the front roller assembly's mounting plate (#4) and through the holes in the cutter deck as shown.
3. Secure carriage bolts (#5) with flat washers (#3), lock washers (#2) and 1/2-13 hex nuts (#1). Hand tighten.
4. Make sure that the roller assembly (#4) is lined up straight. Tighten hex nuts (#1) to correct torque.
5. Repeat steps 2 through 4 for the second roller assembly.
6. Raise the cutter off of the support blocks and set back on the ground.

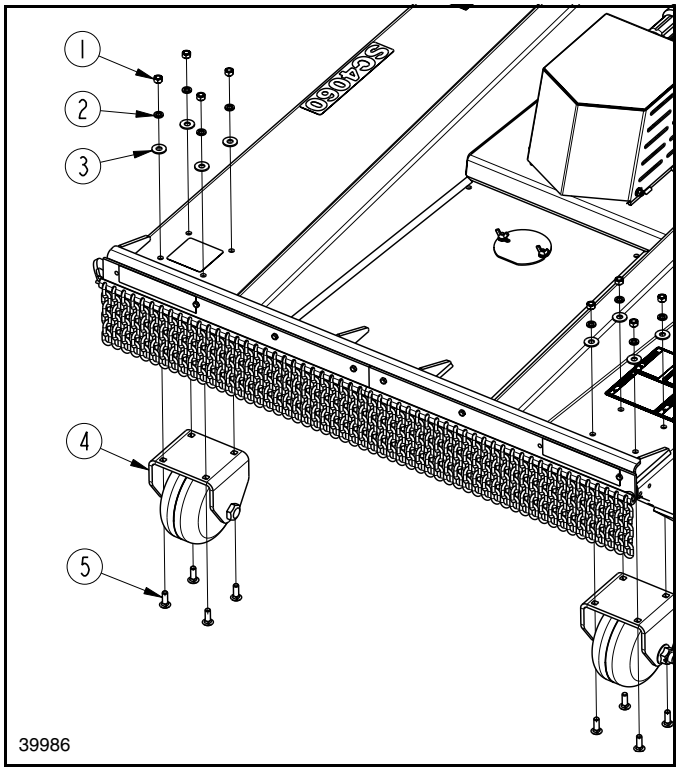

Front Roller Wheel Assembly
Figure 1-7

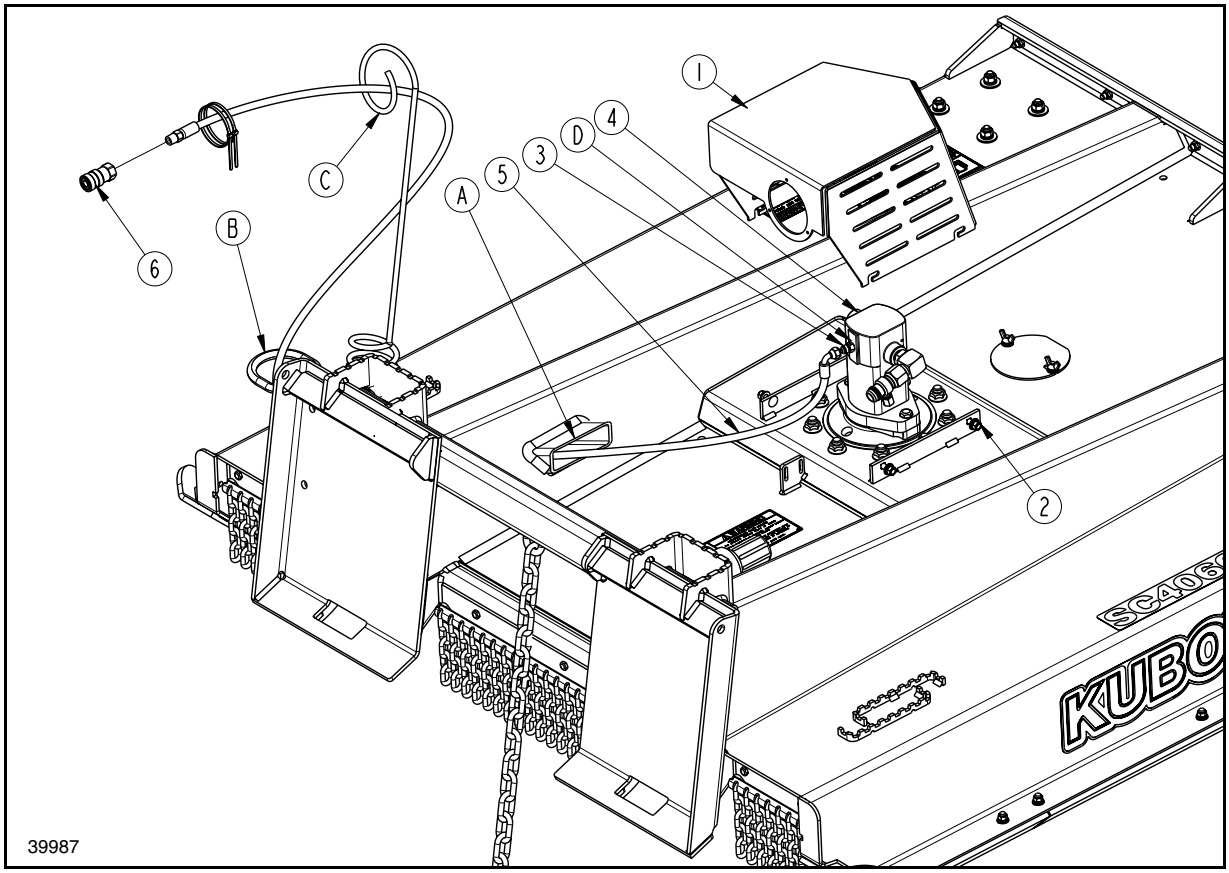

Case Drain Assembly
Figure 1-8

Case Drain Assembly (Optional)

Refer to Figure 1-8:

1. Loosen four 3/8"-16 hex nuts (#2). Removing the hex nuts is not necessary.
2. Remove motor shroud (#1) by pushing it toward the front of the unit then lifting it upward.
3. Remove plug from hole (D) in hydraulic motor (#4).
4. Attach adapter fitting (#3) to hole (D) in hydraulic motor (#4) as shown and tighten.
5. Route hydraulic hose (#5) through designated areas (A, B, & C) as shown.
6. Attach female end of hydraulic hose (#5) to adapter fitting (#3) and tighten.
7. Place the motor shroud back in its designated place and pull back to lock it in place. Tighten hex nuts (#2) to the correct torque.
8. Attach flat faced coupler (#6) to the male end of hydraulic hose (#5) and tighten.
9. Connect coupler (#6) to case drain reservoir on skid steer as shown on Figure 1-6 on page 14.
10. Zip tie the case drain hydraulic hose to the two existing hoses.

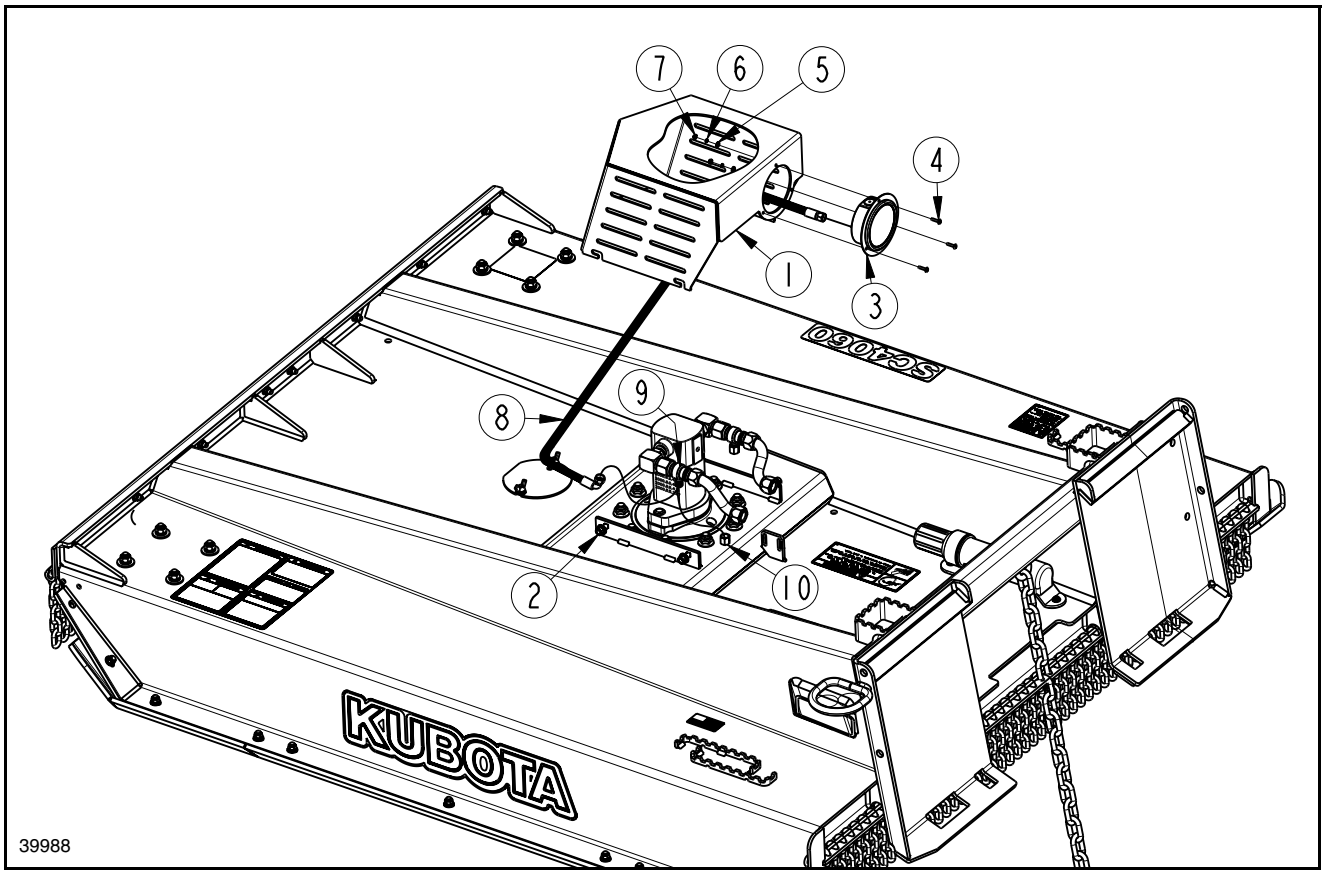

Pressure Gauge Assembly
Figure 1-9

Pressure Gauge Assembly (Optional)

Refer to Figure 1-9:

1. Loosen four 3/8"-16 hex nuts (#2). Removing the hex nuts is not necessary.
2. Remove the motor shroud (#1) by pushing it toward the front of the unit then lifting it upward.
3. Remove 9/16" cap (#10) from tee fitting (#9).
4. Attach curved end of hydraulic hose (#8) to tee fitting (#9) and tighten.
5. Route hydraulic hose (#8) through the hole in motor shroud (#1) that is designated for the pressure gauge (#3).
6. Attach hydraulic hose (#8) to the pressure gauge (#3) and tighten.
7. Attach the pressure gauge (#3) using three 8-32 X 3/4" round head screws (#4). Put the screws through the holes in the pressure gauge and motor shroud and fasten them with three flat washers (#5), lock washers (#6) and 8-32 hex nuts (#7). Tighten the hex nuts.
8. Place the motor shroud back in its designated place and pull back to lock it in place. Tighten hex nuts (#2) to correct torque.

Protective Door Assembly (Optional)

Refer to Figure 1-10:

WARNING

To avoid serious injury or death:

Do not drill holes in the ROPS (Roll Over Protection System) to attach this Operator Protective Door. Drilling unapproved holes in the ROPS can weaken the structure.

For your safety, do not use this cutter without an installed OEM Polycarbonate Protective Operator Door. If the skid steer/track loader is not equipped with a polycarbonate door, an optional door may be purchased with the cutter.

Refer to the instructions below when installing Kubota's optional polycarbonate door.

1. Cut notches in protective door as needed to provide clearance around u-bolts and skid steer frame.
2. Install the polycarbonate door to the skid steer's hand hold with two u-bolts (#3), flat bars (#2), and four nuts (#1) as shown. Tighten nuts to correct torque.

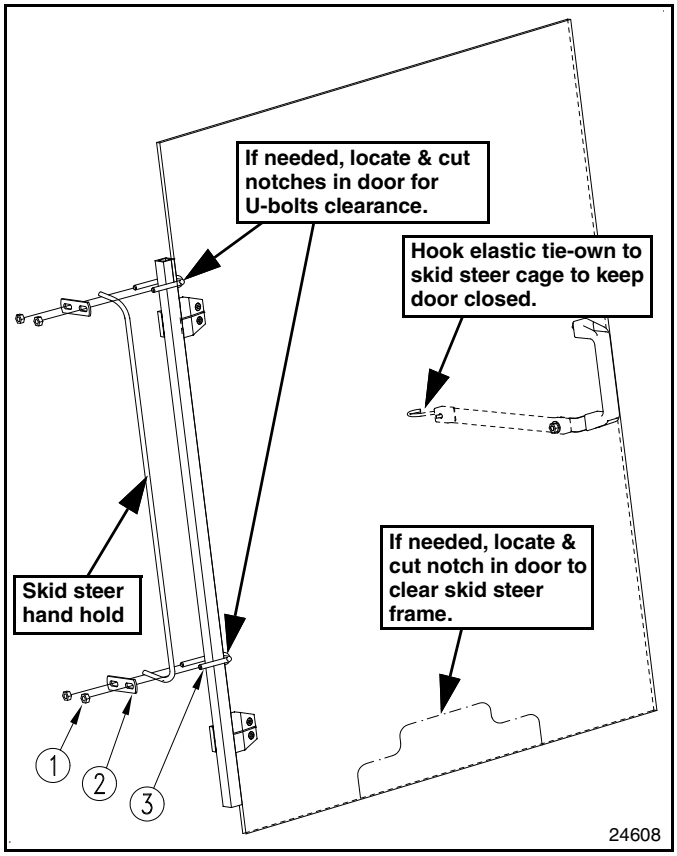

Polycarbonate Protective Door Assembly
Figure 1-10

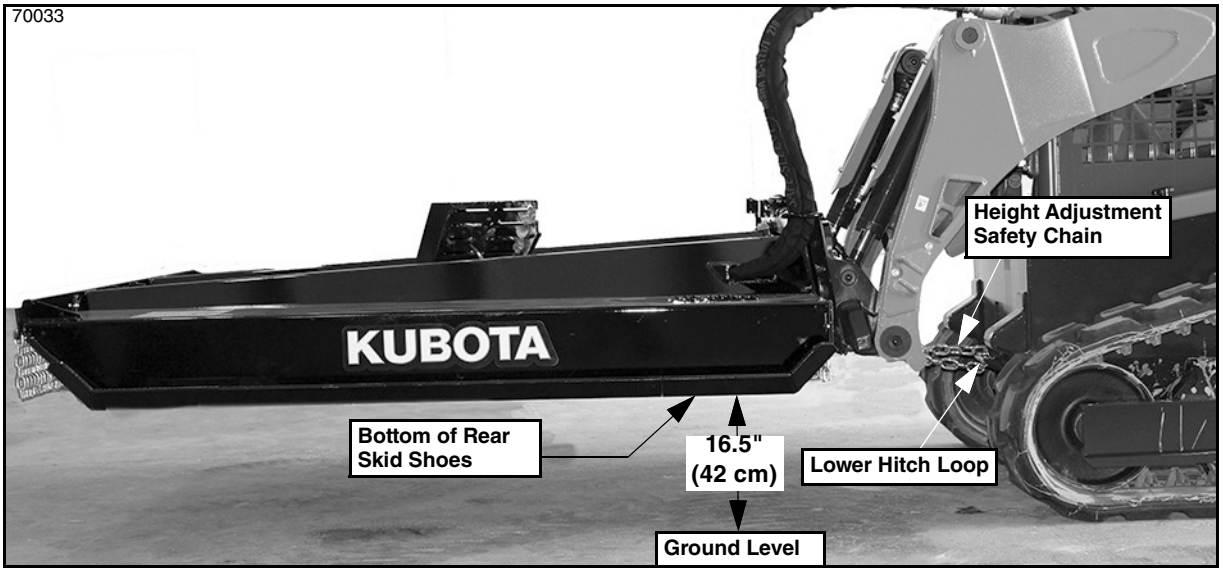

Nominal Cutting Height (SVL shown)
Figure 2-1

Height Adjustment Safety Chain

⚠ DANGER

To avoid serious injury or death:

- *Do not operate cutter with skid shoes any higher than 16.5" (42 cm) off the ground. Always use height adjusting safety chain to limit cutting height. Raising cutter too high will throw debris at the operator.*
- *Do not tilt hitch plate to raise front of cutter higher than the rear. Raising front of cutter can cause serious bodily injury and/or death.*
- *Always secure equipment with solid, non-concrete supports before working under it. Never go under equipment supported by concrete blocks or hydraulics. Concrete can break, hydraulic lines can burst, and/or hydraulic controls can be actuated even when power to the hydraulics is off.*

Refer to Figure 2-1:

For safety, the cutter skid shoes should not be raised higher than 16.5" (42 cm) off the ground or 18" (46 cm) maximum cutting height.

NOTE: Two people may be required to install and adjust the height adjustment safety chain.

1. Raise cutter's rear skid shoes slightly less than 16.5" (42 cm) off the ground. Secure the cutter with support blocks.
2. Run height adjustment safety chain under the upper cross tube and skid steer hitch plate to the skid steer lower hitch loop. Thread chain through the hitch loop and back toward the hitch plate. Connect quick link coupler to a chain loop as shown in Figure 2-2.

NOTE: When attaching the Rotary Cutter to a Kubota SVL machine, height adjustment safety chain (#2) should be looped around SVL tie-down bar (#1) and adjusted so that the cutter cannot be raised over 16.5" (42 cm) off the ground as shown in Figure 2-2 below.

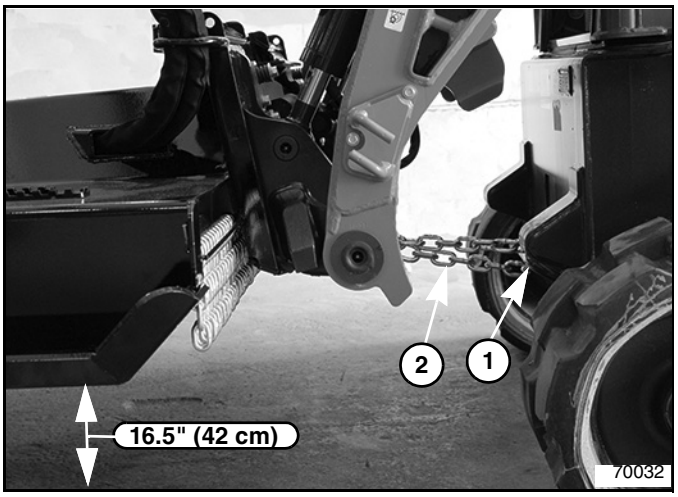

SC40 Height Adjustment (SVL Shown)
Figure 2-2

3. Raise cutter up until the safety chain is tight. Check height of rear skid shoes.
4. If rear skid shoes are more than 16.5" (42 cm) above ground level, lower cutter and make necessary adjustments to the safety chain to limit rear skid shoe height to 16.5" (42 cm) maximum.
5. Tighten quick link coupler nut to secure safety chain.

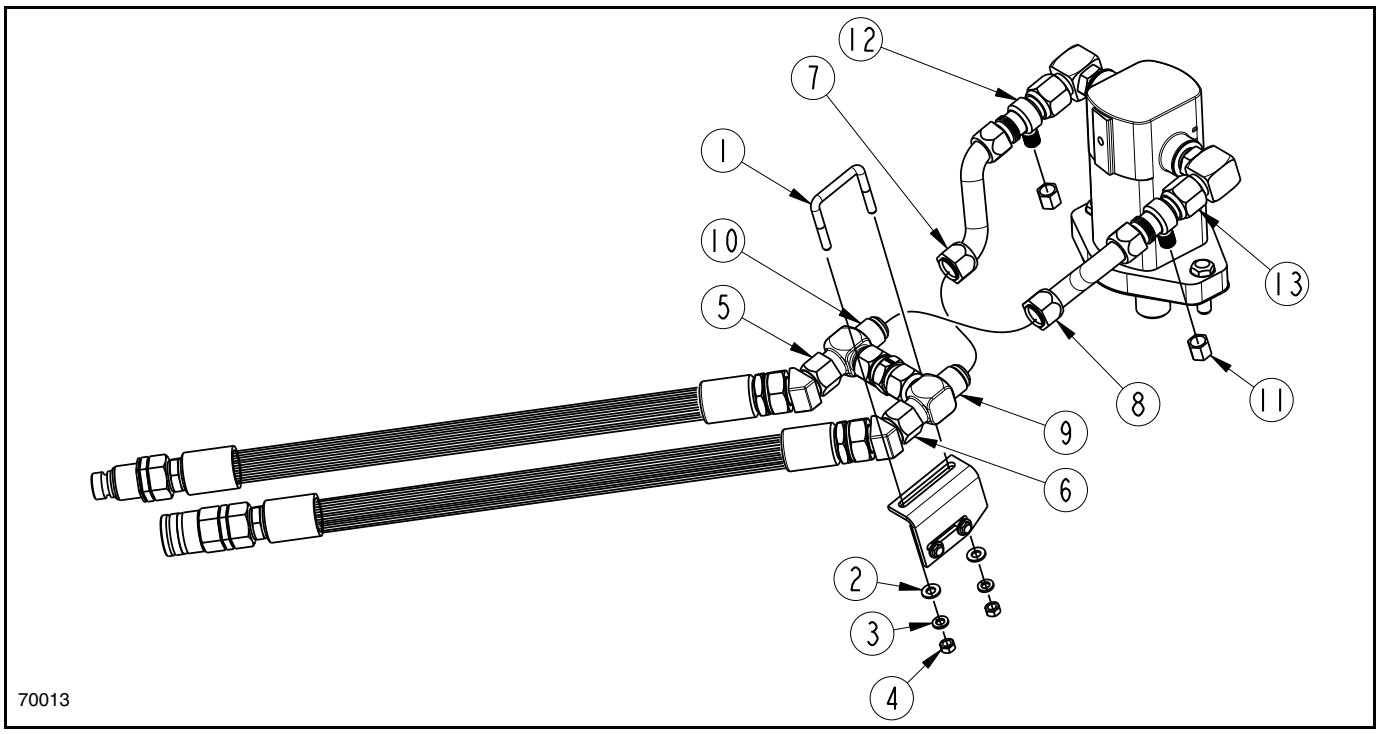

Blade Rotation Change
Figure 2-3

Blade Rotation Change

The SC40 cutter has the capability to switch blade rotation directions. This will help utilize the dual sided blades. Once the blades get dull you can switch blade rotation and use the other side of the blades.

Refer to Figure 2-3:

1. Remove 5/16" hex nuts (#4), lock washers (#3) and flat washers (#2). Remove U-bolt (#1).
2. Loosen nuts (#5 & 6). Do not take apart.
3. Loosen nuts (#7 & 8) and remove from hydraulic fittings.
4. Rotate hose fittings (#9 & 10), along with the hoses attached to them, 180 degrees so that fitting (#10) attaches to hose nut (#8) and fitting (#9) attaches to hose nut (#7).
5. Tighten nuts (#5, 6, 7 & 8)
6. Re-install U-bolt (#1) with flat washers (#2), lock washers (#3) and nuts (#4). Tighten to correct torque.
7. Continue to step 8 if you have a pressure gauge option. Otherwise blade rotation change is complete.
8. Remove cap (#11) from fitting (#13) as shown.
9. Remove pressure gauge hose from fitting (#12) and attach the hose to fitting (#13).
10. Attach cap (#11) to fitting (#12).
11. Tighten the cap and pressure gauge hose.

Equipment Clearances

Visually inspect hydraulic hoses for possible pinch points and length. Make any necessary adjustments before putting equipment into service.

1. If necessary, have someone stand nearby that can motion for the operator to stop if a problem develops while checking for clearances.
2. With deck lowered to its minimum cutting height, slowly tilt the hitch plate back raising the front of the cutter while watching for interferences between skid steer, skid steer wheels, and cutter. Make sure hydraulic hoses are long enough and do not become pinched through the full range of motion.
3. With hydraulic cylinders still retracted, slowly raise cutter up while continuing to watch for interferences between skid steer, skid steer wheels, and cutter until height adjustment safety chain limit is reached.
4. Slowly tilt the hitch plate forward until the front of the deck is touching the ground.
5. Tilt hitch plate back until the deck looks parallel with the ground.
6. Slowly lower deck down while retracting hydraulic cylinders on end of loader arms until deck is level and resting on the ground.
7. Be sure to make any necessary corrections to the hydraulic hoses before putting cutter into service.

Operating Checklist

Hazard control and accident prevention are dependent upon the awareness, concern, prudence, and proper training involved in the operation, transport, storage and maintenance of the Rotary Cutter. Therefore, it is absolutely essential that no one operates the Rotary Cutter unless they have read, fully understood, and are totally familiar with the Operator's Manual. Make sure the operator has paid particular attention to:

- **Important Safety Information,** page 1
- **Section 1: Assembly & Set-up,** page 10
- **Section 2: Adjustments,** page 18
- **Section 3: Operating Procedures,** page 20
- **Section 5: Maintenance & Lubrication,** page 28

Perform the following inspections before using your Rotary Cutter.

Operating Checklist

✔	Check	Ref.
	Make sure guards and shields are in place and secure.	1
	Inspect hydraulic hoses and replace if they are worn, damaged, or leak. Replace with genuine OEM parts.	3
	Check fluid levels in motor spindle hub and grease all fittings. Refer to "Lubrication Points".	32
	Check Rotary Cutter initially and periodically for loose bolts & nuts. See "Torque Values Chart".	37

Safety Information

DANGER

To avoid serious injury or death:

- *Rotary Cutters have the ability to discharge objects at high speeds; therefore, the use of front & rear safety guards is mandatory with this cutter. Stop blade rotation if bystanders are in or around the area. It is recommended that a safety shield be placed between the operator and cutter on an open air tractor.*
- *Keep bystanders clear while cutter is operating. Shut cutter and power machine down if a bystander is in or around the area. People can be hurt by thrown objects, rotating blades, being run over, etc.*
- *Always disengage auxiliary hydraulics to the cutter, shutdown the power machine, and wait for cutter blades to spool down to a stop before allowing anyone to clean, service, preform maintenance, or be near the cutter. Refer to power machine shutdown procedures provided in this manual.*
- *Clear area to be cut of debris and other unforeseen removable objects before cutting. Mark non-removable hazards such as tree stumps, post stubs, protruding objects, rocks, drop-offs, holes, etc. with a visible flag.*
- *All guards and shields must be installed and in good working condition while operating the attachment.*
- *Do not use cutter as a fan. Cutting blades are not properly designed or guarded for this use.*
- *Do not operate cutter with skid shoes any higher than 16.5" (42 cm) off the ground. Always use height adjusting safety chain to limit cutting height. Raising cutter too high will throw debris at the operator.*
- *Lifting cutter up without the height adjusting safety chain installed can result in the cutter making contact with an electrical power line and causing electrocution.*
- *Keep attachment and/or loader arms away from overhead electrical power lines. Place an orange warning sign under overhead lines indicating type of danger above.*
- *Do not operate cutter after dark without working lights. The equipment can hit unseen objects or be hit by other vehicles. The operator can loose control of the tractor and cutter causing a wreck or roll-over.*

WARNING

To avoid serious injury or death:

- *Allow only persons to operate this implement who have fully read and comprehended this manual, and who are properly trained in the safe operation of this implement.*
- *Make sure controls are all in the neutral position or park before starting the power machine.*
- *Always shut skid steer down using "Skid Steer Shut Down Procedure" provided in this manual before dismounting to maintain and/or make adjustments to the skid steer cutter.*
- *Never carry riders on the attachment or power machine. Riders can obstruct the operator's view, interfere with controls, be pinched by moving components, become entangled in rotating components, struck by objects, thrown about, fall off and be run over, etc.*
- *Hydraulic fluid under high pressure will penetrate the skin or eyes causing serious injury. Wear protective gloves and safety glasses or goggles when working with hydraulic systems. Use a piece of cardboard or wood, rather than hands, when searching for leaks. If an accident occurs, seek immediate emergency medical care or gangrene may result. DO NOT DELAY.*
- *Do not operate a hammer or mulching equipment on an open cab machine or on a machine with a tempered front glass window/door. The operator MUST use a polycarbonate front door/window when operating a hammer or mulching equipment.*
- *To protect the operator from thrown objects, the skid steer or track loader MUST be equipped with a polycarbonate protective door, and the operator MUST wear eye protection such as safety glasses or goggles.*
- *Use caution when entering and exiting the skid steer. Maintain three points of contact. Be careful not to become entangled in hydraulic hoses while entering or exiting the skid steer operator station.*
- *Do not operate and/or travel across inclines where the tractor and/or implement can rollover. Consult your*

tractor's manual for acceptable inclines the tractor is capable of traveling across.

- *Do not travel too fast. The rougher the terrain, the slower you must travel. Always travel at a speed slow enough to be able to adjust the deck height before running it into the ground. Also, travel slow enough to stop before running or turning into obstacles ahead and on either side.*
- *Do not use this attachment to lift, carry, push or tow other equipment or objects. It is not properly designed or guarded for this use. The operator could lose control resulting in equipment damage and/or tipping hazard.*
- *Do not use this attachment to pull and/or pry fence posts, stumps, roots, rocks, or other objects out of the ground. It is not properly designed or guarded for this use.*
- *Do not use this attachment as a lifting device for people or as a work platform. It is not properly designed or guarded for this use.*
- *Do not operate cutter with blades that are out-of-balance, bent, excessively worn, excessively nicked, or with blade bolts that are excessively worn. Damaged components can break at high speeds and be ejected in a hazardous manner.*
- *Do not alter attachment or replace parts on the attachment with other brands. Other brands may not fit properly or meet OEM (Original Equipment Manufacturer) specifications. They can weaken the integrity and impair the safety, function, performance, and life of the attachment. Replace parts only with genuine OEM parts.*
- *Do not exceed rated cutting capacity of your cutter. See specifications & capacities for specified cutting capacity. Exceeding rated cutting capacity can damage drive components, cutter blades, and deck components.*
- *Cutter deck can be slippery especially when wet. Always step on anti-slip surfaces when possible. Never hurry. Make sure you have secure footing and hand hold when walking on the deck.*
- *Buildup of debris around moving components and gearboxes is a fire hazard. Keep rotating parts and gearboxes free from debris.*
- *Make sure hydraulic hoses are properly routed without twists to prevent becoming stretched, pinched, or kinked. A damaged hydraulic hose can burst and leak hydraulic fluid.*
- *Avoid catching hydraulic hoses on brush, posts, tree limbs, and other protrusions that could damage and/or break them.*

IMPORTANT: Do not over angle hitch plate forward. Over angling can cause damage to deck and hitch.

The Rotary Cutter should be operated with front roller wheels on the ground and deck rear slightly higher off the ground than deck front. As the operator travels over uneven terrain, the skid steer hitch plate tilt angle and lift arm height may need some readjusting to maintain correct deck positioning.

Transporting

WARNING

To avoid serious injury or death:

When traveling on public roadways, travel in such a way that faster moving vehicles may pass safely. Use hazard lights, clean reflectors, and a slow moving vehicle sign that is visible from the back to warn operators in other vehicles of your presence. Always comply with all federal, state, and local laws.

1. Be sure to reduce ground speed when turning; and, leave enough clearance so the Rotary Cutter does not contact obstacles such as buildings, trees, or fences.
2. Select a safe ground travel speed that is 20 mph or less when transporting from one area to another. When traveling on roadways, transport in such a way that faster moving vehicles may pass you safely.
3. Decrease transport speed when traveling over rough or hilly terrain.
4. When transporting skid steer and Rotary Cutter on a trailer:
   - Use towing vehicle and trailer of adequate capacity.
   - Always drive up a ramp with heavy end uphill.
   - Engage skid steer park brake and remove ignition switch key once it is loaded.
   - Secure skid steer loader and attachment using tie-downs and chains.

Cutting Instructions

WARNING

To avoid serious injury or death:

- *Do not operate cutter with the front of the deck angled down more than 30 degrees. Exceeding this angle will result in objects being thrown from under the deck.*

IMPORTANT: Do not over angle hitch plate forward. Over angling can cause damage to deck and hitch.

NOTE: Your cutter is equipped with free swinging cutting blades to reduce shock loads to the cutter when striking an obstacle.

25616

DO NOT OPERATE WITH SKID STEER FRONT WHEELS OFF THE GROUND
Figure 3-1

IMPORTANT: Refer to Figure 3-1: Do not operate cutter or navigate turns with front wheels of skid steer off the ground. Operating in above fashion will cause damage to deck & hitch.

IMPORTANT: Refer to Figure 3-2 on page 23: The deck is open in the front and rear. Swinging the deck side to side without raising it off the ground high enough to clear all obstacles can damage the deck.

The Skid Cutter should be operated in one of two ways.

a. When cutting grass, weeds, or light brush on level to rolling terrain, operate with the deck rear slightly higher than the deck front.

b. When cutting grass, weeds, or light brush on a steep bank, engage blades and travel straight forward toward the bank until the cutter deck is hanging over the bank. Stop traveling and tilt top of hitch plate forward to lower the front of the cutter. Continue to tilt the hitch plate and lower/raise loader arms until the cutter is parallel with the bank slope. Do not operate cutter angled more than 30 degrees down. Once a satisfactory cut has been made, disengage blades, tilt top of hitch plate back to level the cutter deck, raise/lower loader arms as need, and back away from the bank.

1. Thoroughly inspect the area to be cut for debris and unforeseen objects. Mark any potential hazards.
2. Set skid steer hydraulic lift arms and hitch angle to position the deck front at the preferred cutting height and the deck rear slightly higher.
3. Start the skid steer and engage hydraulic motor. Allow several seconds for cutter blades to become aligned properly. If deck continues to vibrate after several seconds, stop motor and inspect blades.
4. It is important to maintain correct hydraulic motor speed. Loss of motor speed will allow the blades to hinge back and result in ragged, uneven cutting.
5. Ground speed depends on two things: the density of material being cut and size of skid steer. Never run fast enough to overload the skid steer or cutter.
6. This cutter was designed to cut grass and medium brush cutting on gently sloping or slightly contoured right-of-ways, pastures, set aside acres, and row crop fields.Always travel straight forward or backward while cutting. Never swing deck side to side without first raising the deck off the ground. Make sure the deck is high enough to clear all obstacles before turning or swinging the deck side to side.

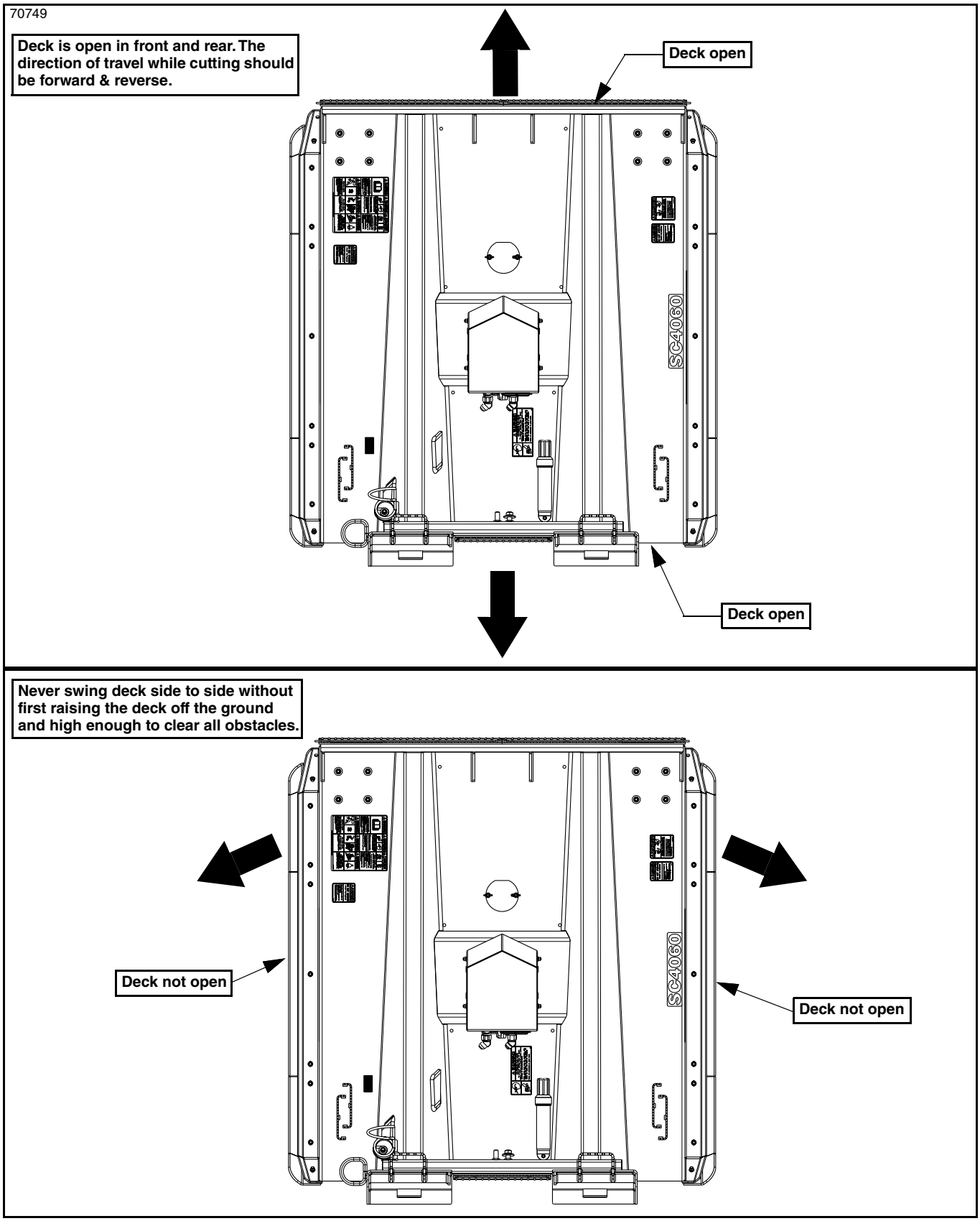

Special Cutter Operating Instructions
Figure 3-2

General Operating Instructions

It is absolutely essential that you read and understand both the Operator's Manual for your Kubota skid steer Rotary Cutter and the Operator's Manual for the skid steer unit you intend to attach it to before attempting to operate or cut with this combination of equipment. You must be able to read, comprehend, and adhere to all safety warnings and decals in order to avoid personal injury, fatalities, injury to others, or costly damage to property and equipment. We highly recommend that you be a skilled and competent skid steer operator prior to attaching and attempting to use the skid steer Rotary Cutter. If there is any part of the information above or safe operating procedures you do not understand, please contact your nearest authorized dealer for a full explanation and training session if necessary.

Skid Steer Operating Instructions

WARNING

To avoid serious injury or death:

To protect the operator from thrown objects, the skid steer or track loader MUST be equipped with a polycarbonate protective door, and the operator MUST wear eye protection such as safety glasses or goggles.

Assuming you have met all of the requirements and taken them seriously, it is time to take the next step and that is accomplished by dressing appropriately for the task. You will need to put on protective eye wear such as safety glasses, goggles, or a face shield. A hard hat, steel toed safety shoes, gloves, and hearing protection are also highly recommended. Never wear loose fitting clothing and you may want to put on a respirator or filter mask to avoid breathing in dust, pollen, or agriculturally used toxins that may be present.

The next step is a static or non-running pre-inspection of the skid steer unit. You will want to make sure that the skid steer is equipped with a fully functioning ROPS (Roll Over Protection System) which does include seat belts and an operator safety enclosure. The cab must also be equipped with a Polycarbonate Operator Protective Door, which may have been supplied with the skid steer unit. Kubota does offer a polycarbonate operator protective door with the SC4060 and SC4072 if one is not provided by your skid steer supplier. If the skid steer is to be operated on local roadways, it must be equipped with appropriate Slow Moving Vehicle (SMV) and other required lighting packages so as to make it compliant with state and local department of transportation requirements. The cutter drive motor must be matched to the output of the hydraulic capacity of the skid steer. Failure to do this could result in serious over-speeding of the cutting unit possibly resulting in serious injury, fatalities, or property damage. The universal quick-hitch mount should be in good working order and latches should be located to the open position.

There should be no evidence of hydraulic leaks in and around the auxiliary hydraulic couplers. There must be a readily accessible attaching point for the Rotary Cutter lift-limit chain on the lower front portion of the chassis frame. Finally make sure that all shields and safety features are in place and fully functional.

The next step is to perform a running check of the skid steer unit. As you get onto the skid steer and into the operator' compartment always use factory provided hand-holds and don't grab the steering or control levers to ease or stabilize your entry. Fasten your seat belt once you are seated and begin to mentally orient yourself with the position of all controls, switches, pedals, levers, and their related functions. Once you are sure that the park brake is on, no people or animals are in close proximity, all control levers, pedals, and hydraulic systems are in neutral position, go ahead and start the engine. With the engine now running and the throttle at approximately one third, test all controls to make sure they are fully functioning. If at any time there is an equipment failure, shut the unit down and make immediate and full repairs.

If attachment is to be operated in reverse, make sure visibility to the rear of the power unit is appropriate for the attachment.

Rotary Cutter Operating Instructions

Assuming all systems with the skid steer are "go" and fully functioning, it is time to connect to the SC4060 or SC4072 Rotary Cutter. This is done by maneuvering the skid steer mounting plate into position under the universal quick hitch top angle bar. Once this is accomplished and the mower is fully supported by the skid steer lift arms, lower mower to a point approximately two inches above ground. Turn the engine off, set the parking brake, and climb out of the skid steer. Lock the latch handles down to engage the hitch pins. Connect the hydraulic hoses to the appropriate auxiliary hydraulic outlets and case drain making sure to keep connectors clean. (Note: Hydraulic flow direction on all skid steers is not the same. Make sure hoses are connected properly or blades will rotate at a much slower speed.) Connect the height limiting safety chain to the chassis attaching point and restrict cutting height to no more that eighteen inches. This completes the attachment of the cutter to the skid steer.

The next step is to complete a pre-operation check of the cutter. Make sure all guards, safety shields, safety chains, and deflectors are in place. All hardware must be in place and appropriately tightened. Damaged, severely worn, or defective parts must be replaced prior to operation.

It is important that you inspect the area where you will be cutting and clear it of hazards and foreign objects before you start mowing. Never assume the area is clear. Cut only in areas you are familiar with and are free of foreign objects. Extremely tall grass should be cut twice to detect potential hazards. In the event you do strike an object, stop the cutter and tractor immediately to inspect and make any necessary repairs to the cutter before resuming operation. Remove or clearly mark the struck object to prevent hitting it again.It really pays to inspect a new area and to develop a safe plan before cutting.

No one, including people and animals, should be allowed within 100 yards (90 m) of this cutter when in operation. If someone does approach, shut the cutter down immediately. The blades on this cutter should never be allowed to come in contact with objects such as wire, cable, rope, or chains that might become entangled. These types of entangled objects can become extremely hazardous by rotating outside of the cutter deck housing resulting in serious injury or death. Always inspect the area before you mow.

The best mowing results will be achieved at speeds between 2 mph to 5 mph (3.2 to 8.0 km/h) as ground and mowing conditions dictate. If you are mowing in particularly tall or dense brush, you may want to make two passes with the first pass being higher and the second pass made as a cross-cut at the desired cut height. The pressure gauge option enables the operator to determine the ground speed obtainable without stalling the cutter. When operating with a pressure gauge the pressure reading should be up to within 500 psi (34.5 Bar) of the skid steer's output. Example: skid steer output = 3500 psi (341.3 Bar), if the operator adjusts the ground speed so the pressure gauge reading is up to 3000 psi then the cutter will not stall. If the ground speed causes the pressure to increase to 3500 psi (341.3 Bar) the cutter will stall and the blades will stop rotating. Conversely, if the pressure reading is less than 3000 psi, (306.8 Bar) the operator can increase their ground speed if desired. If you are mowing without the benefit of the front rollers, you will probably need to slow down significantly especially over uneven terrain or furrows. Driving too fast over uneven ground will cause the unit to undulate in a forward pitching motion. The best advice is to drive slow but keep engine speed and blade tip speed high. Once you get the feel of it you can increase speed and productivity.

When you do need to stop, make sure you set the park brake, shut the skid steer engine off, and allow time for the blades to stop rotating before you climb down. With a little practice we are confident you will soon achieve safe and excellent results with your new Kubota SC4060 or SC4072 skid steer Rotary Cutter.

Front Roller Bundle (Option)

Refer to Figure 4-1:

Front Roller Bundle 326-646A

The front mounted rollers will aid in the forward motion of the cutter and help protect against running the cutter frame into the ground. The rollers will also help in lengthening the life of the cutter's skid shoes.

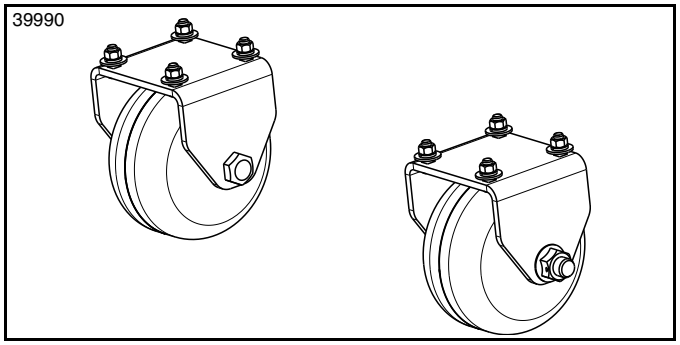

Front Roller Bundle
Figure 4-1

Pressure Gauge Bundle (Option)

Refer to Figure 4-2:

Pressure Gauge Bundle 326-867A

Kubota offers an optional motor pressure gauge that allows for the operator to ensure that the motor is operating at optimal psi.

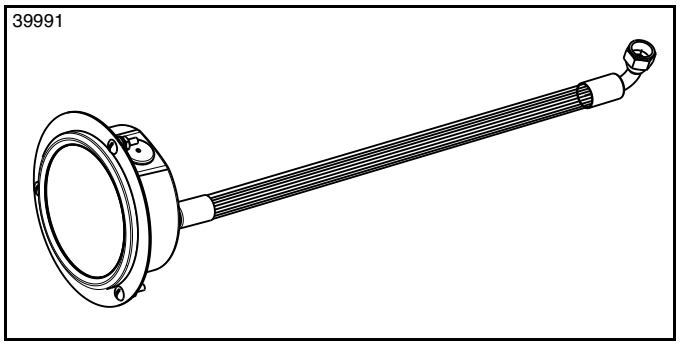

Pressure Gauge Bundle
Figure 4-2

Case Drain Bundle (Option)

Refer to Figure 4-3:

Case Drain Bundle 60" 326-863A
Case Drain Bundle 72" 326-864A

Kubota offers a case drain bundle for the SC4060 and SC4072 to protect the hydraulic motor and seals from excessive pressure.

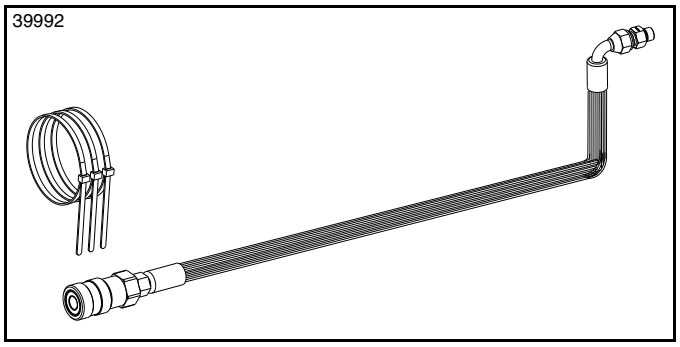

Case Drain Bundle
Figure 4-3

Narrow Skid Shoe Bundles (Accessory)

Refer to Figure 4-4:

Skid Shoe Bundle SC4060 . . . . . 327-295A
Skid Shoe Bundle SC4072 . . . . . .327-294A

Kubota offers the narrow skid shoe bundles complete with mounting hardware for the SC4060 and SC4072. The skid shoes allows the cutter to fit in narrow spaces primarily for transport.

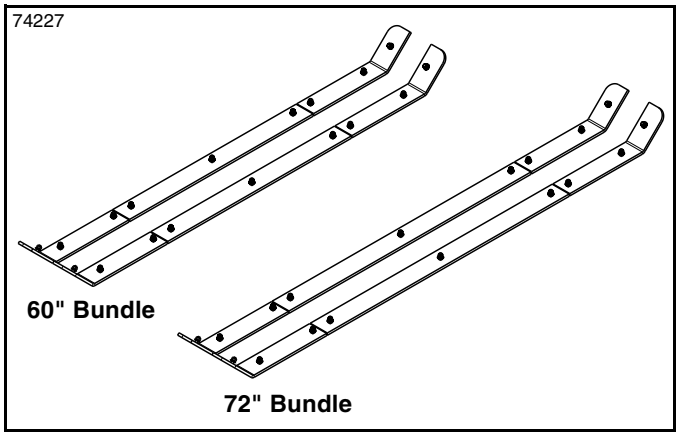

Narrow Skid Shoes
Figure 4-4

Motor and Hose Bundles (Option)

Refer to Figure 4-5:

SC4060

15-26 GPM Motor and Hose Bundle 326-846A
27-43 GPM Motor and Hose Bundle 326-848A

SC4072

15-26 GPM Motor and Hose Bundle 326-860A
27-43 GPM Motor and Hose Bundle 326-861A

To meet your skid steer requirements, Kubota offers two motor and hose assemblies for the SC4060 and SC4072. The bundles are interchangeable and do not require adapter kits. Compare your motor's gpm rating located on an attached decal with the gpm ratings above:

If your cutter's motor and hose assembly is not compatible with your skid steer, you should replace it with one of the assemblies above.

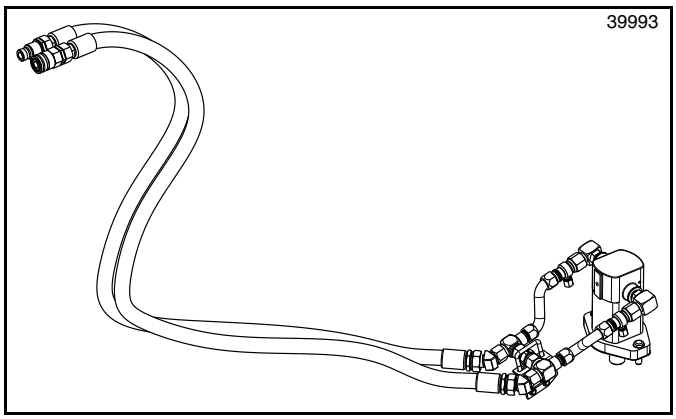

Hydraulic Motor and Hose Bundle
Figure 4-5

Polycarbonate Protective Door (Option)

Refer to Figure 4-6:

Polycarbonate Protective Door. 326-024A

The skid steer or track loader **MUST** be equipped with an OEM Polycarbonate Operator Protective Door for shielding against flying debris when attached to a Rotary Cutter. Kubota offers a universal polycarbonate door shield that attaches to your skid steer hand hold with two u-bolts. Some notching in the shield may be required to fit your particular skid steer model. See **"Protective Door Assembly (Optional)"** on page 17 for additional information.

The owner may choose to use a polycarbonate protective door provided by their skid steer supplier. Kubota offers a Operator Protective Door Kit #S6686 which can be used with the Kubota SVL. See your nearest Kubota dealer if purchasing this kit.

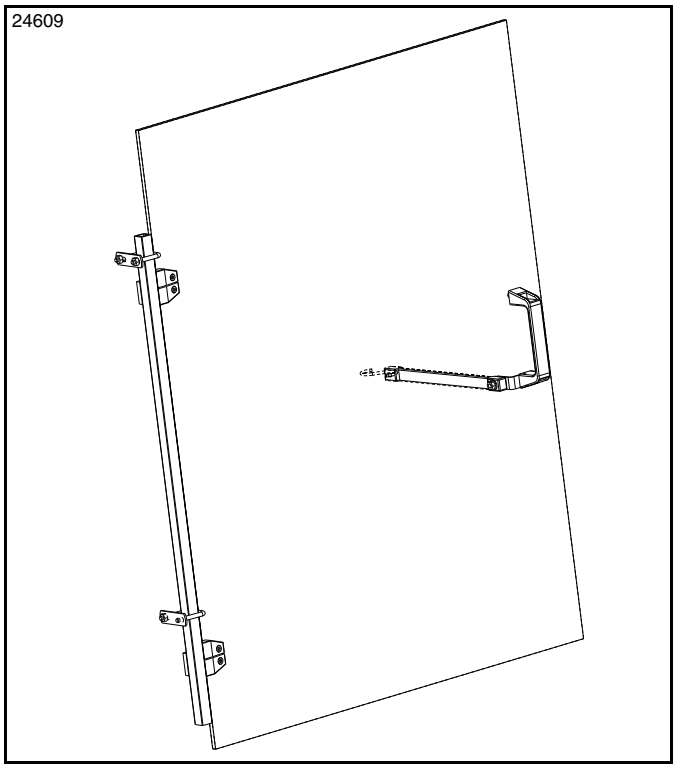

Polycarbonate Protective Door
Figure 4-6

Large Flat Face Couplers & Adapters (Accessory)

Refer to Figure 4-7:

Large Flat Face Couplers w/ Adaptors. . . 326-960A

Kubota offers large flat face couplers with adaptors should the skid steer require these couplers to complete the hydraulic hook-up.

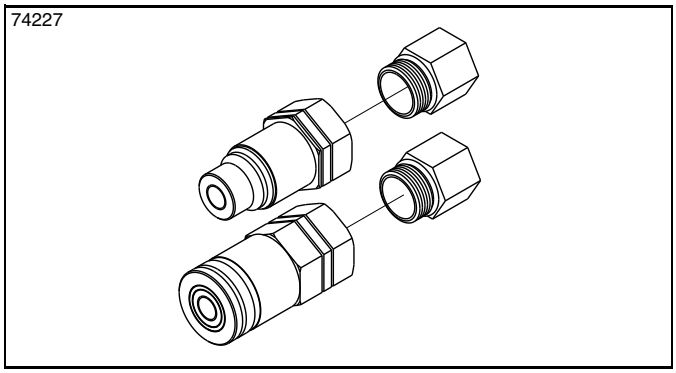

Large Flat Face Couplers With Adaptors
Figure 4-7

Maintenance

Proper servicing and adjustment are key to the long life of any attachment. With careful inspection and routine maintenance, you can avoid costly downtime and repair.

Check all bolts after using unit for several hours to be sure they are tight. Replace any worn, damaged, or illegible safety labels by obtaining new labels from your Kubota dealer.

The parts on your cutter have been specially designed and should only be replaced with genuine Kubota parts. Do not alter the cutter in a way which will adversely affect its performance.

DANGER

To avoid serious injury or death:

- *Do not go near or under raised loader arms without first securing loader arms in the raised position with an approved lift-arm support.*
- *Always secure equipment with solid, non-concrete supports before working under it. Never go under equipment supported by concrete blocks or hydraulics. Concrete can break, hydraulic lines can burst, and/or hydraulic controls can be actuated even when power to the hydraulics is off.*

WARNING

To avoid serious injury or death:

- *Always shut power machine down using the "Shutdown Procedure" provided in this manual before servicing, adjusting, cleaning, or maintaining the attachment.*
- *Make sure controls are all in the neutral position or park before starting the power machine.*
- *Keep body, body extremities, loose clothing, pull strings, etc. away from pinch points such as rotating, extending, and/or retracting components. Secure pinch point areas to ensure they will not move before working on or near them.*
- *Perform scheduled maintenance. Check for loose hardware, missing parts, broken parts, structural cracks, and excessive wear. Make repairs before putting the implement back into service.*
- *Do not alter attachment or replace parts on the attachment with other brands. Other brands may not fit properly or meet OEM (Original Equipment Manufacturer) specifications. They can weaken the integrity and impair the safety, function, performance, and life of the attachment. Replace parts only with genuine OEM parts.*
- *Buildup of debris around moving components and gearboxes is a fire hazard. Keep rotating parts and gearboxes free from debris.*

Hydraulic System

WARNING

To avoid serious injury or death:

Hydraulic fluid under high pressure will penetrate the skin or eyes causing serious injury. Wear protective gloves and safety glasses or goggles when working with hydraulic systems. Use a piece of cardboard or wood, rather than hands, when searching for leaks. If an accident occurs, seek immediate emergency medical care or gangrene may result. DO NOT DELAY.

One of the most important things you can do to prevent hydraulic system problems is to ensure that your skid steer reservoir remains free of dirt and contamination.

Use a clean cloth to wipe the hose ends before attaching them to your skid steer. Replace the filter element for your skid steer's hydraulic system at the prescribed intervals. These simple maintenances will go a long way to prevent occurrence of hydraulic problems.

Cutter Blade Maintenance

WARNING

To avoid serious injury or death:

- *Always shut power machine down using the "Shutdown Procedure" provided in this manual before servicing, adjusting, cleaning, or maintaining the attachment.*
- *Do not operate cutter with blades that are out-of-balance, bent, excessively worn, excessively nicked, or with blade bolts that are excessively worn. Damaged components can break at high speeds and be ejected in a hazardous manner.*
- *Do not attempt to straighten a bent blade or weld on a blade. Do not attempt to modify a blade such as hard surfacing, heat treating, cold treating, or by any other method. Always replace blades with genuine OEM blades to assure safety.*

IMPORTANT: Replace cutting blades in sets with genuine OEM blades only. Blades must be replaced in sets. Not replacing blades in sets will result in an out-of-balance condition that could contribute to premature bearing wear/breakage and/or structural cracks in gearbox and/or deck.

Always inspect blades before each use. Make certain they are properly installed and in good working condition. Replace any blade that is damaged, worn, bent, or excessively nicked. Never try to straighten a bent blade! Small nicks can be ground out when sharpening.

Remove blades and sharpen or replace as follows:

1. Properly shut down skid steer according to your skid steer Operator's Manual.
2. Secure cutter deck in the up position with solid supports before servicing underside of cutter.
3. **Refer to Figure 5-1:** Remove blade bolt cover.
4. **Refer to Figure 5-2:** Rotate blade bolt (#1) until in alignment with blade bolt access hole.
5. Unscrew locknut (#5) to remove cutting blade (#2). Blade bolt (#1) is keyed and will not turn freely.
6. Blades should be sharpened at the same angle as the original cutting edge and must be replaced or re-ground at the same time to maintain proper balance in the cutting unit. The following precautions should be taken when sharpening blades:
   a. Do not remove more material than necessary.
   b. Do not heat and pound out a cutting edge.
   c. Do not grind blades to a razor edge. Leave a blunt cutting edge approximately 1/16" (1.5 - 2 mm) thick.
   d. Always grind cutting edge so end of blade remains square to cutting edge and not rounded.
   e. Blades should weigh the same with not more than 1 1/2 oz. difference. Unbalanced blades will cause excessive vibration which can damage gearbox bearings and create structural cracks.

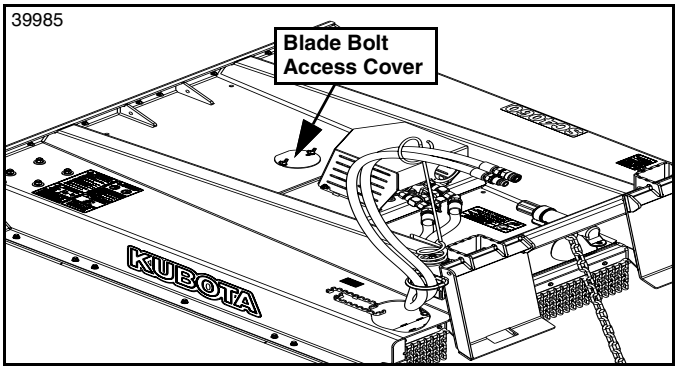

Blade Bolt Access Cover Location
Figure 5-1

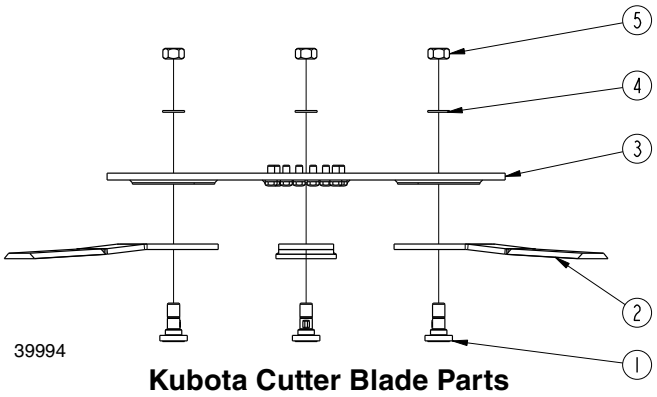

Kubota Cutter Blade Parts

Item	Part No.	Part Description
	318-586A	BLADE BOLT KIT (Contains #'s 1, 4, & 5)
1	802-277C	BLADE BOLT
2	820-550C	CUTTER BLADE
3	326-849H	BLADE CARRIER SC4060
3	312-850H	BLADE CARRIER SC4072
4	804-147C	WASHER FLAT
5	803-170C	NUT TOP LOCK

Cutter Blade Assembly
Figure 5-2

Refer to Figure 5-2:

WARNING

To avoid serious injury or death:

A locknut that has been removed can lose its thread locking properties. Reusing a used locknut can result in a thrown blade. Always use a new locknut when installing blades.

IMPORTANT: Examine blade bolts, washers, and nuts for excessive wear and replace if worn.

7. Insert blade bolt (#1) through blade (#2), blade carrier (#3) and flat washer (#4). Secure blade with a new locknut (#5).
8. Torque locknut (#5) to 450 ft. lbs (610 Nm).
9. **Refer to Figure 5-1:** Replace blade bolt access cover.

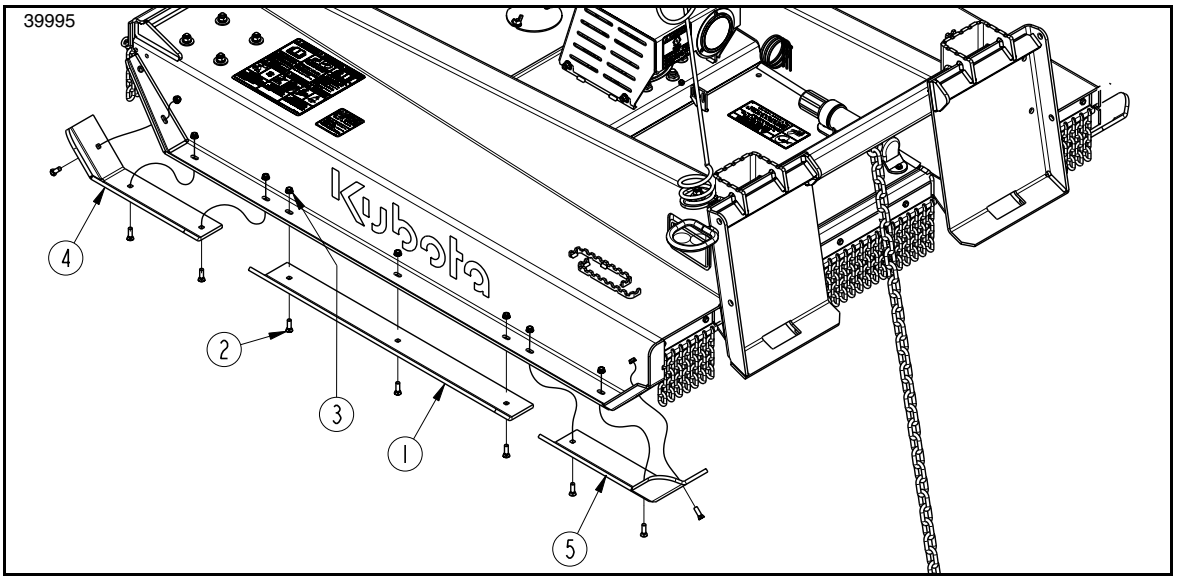

Skid Shoe Replacement
Figure 5-3

Skid Shoe Maintenance

WARNING

To avoid serious injury or death:

Excessive wear on skid shoes can damage side panels, cause inadequate operation of cutter, and create a safety hazard. Always replace skid shoes at the first sign of wearing thin.

Skid shoes should be inspected at the beginning of each cutting season and replaced when material thickness is less than 1/8" (3 mm) at any point. Order only genuine Kubota parts from your local Kubota dealer.

Refer to Figure 5-3 on page 30:

Replace skid shoes as follows:

1. Raise the Rotary Cutter 3" (7.6 cm) or more off the ground and place support blocks under the cutter. Make sure the support blocks are positioned so they will not interfere with skid shoe installation.
2. Lower cutter onto support blocks, place skid steer in park, set park brakes, shut the skid steer off and remove switch key.
3. Remove 3/8" whiz nuts (#3), 3/8" plow bolts (#2) and three skid shoes (#1, #4 & #5) from each side of the deck.
4. Plow bolts should be checked for wear and replaced if necessary.
5. Install the new skid shoes (#1, #4 & #5) to one side of the deck as shown with 3/8"-16 GR5 plow bolts (#2), and 3/8" whiz nuts (#3). Tighten whiz nuts to the correct torque.
6. Repeat step 5 for other side of the deck.

NOTE: Skid shoe (#4) will be mounted on the front left side of the deck as shown and on the rear right side of the deck. Skid shoe (#5) will be mounted on the rear left side of the deck as shown and on the front right side of the deck.

7. Raise cutter up and remove from support blocks.

Skid Shoe Parts

Item	Part No.	Part Description
1	327-577D	SKID SHOE MID HD 60
1	327-576D	SKID SHOE MID HD 72
2	802-466C	PLOW 3/8"-16X1 1/4" GR5
3	803-198C	NUT HEX WHIZ 3/8"-16 PLT
4	326-896H	SKID SHOE HD
5	326-897H	SKID SHOE HD

Long-Term Storage

Clean, inspect, service, and make necessary repairs to the attachment when storing it for long periods and at the end of the season. This will help to ensure the unit is ready for field use the next time you hook-up to it.

DANGER

To avoid serious injury or death:

- *Do not modify the Rotary Cutter without authorization from Kubota. Unauthorized modifications to the cutter can result in the cutter not performing properly and/or cause serious injury or death.*
- *Always secure equipment with solid, non-concrete supports before working under it. Never go under equipment supported by concrete blocks or hydraulics. Concrete can break, hydraulic lines can burst, and/or hydraulic controls can be actuated even when power to the hydraulics is off.*

Clean the Rotary Cutter at the end of the working season or when the cutter will not be used for a long period.

1. Clean off any dirt or grease that may have accumulated on the cutter and moving parts. Scrape off compacted dirt from the bottom of the deck and then wash the surface thoroughly with a garden hose. A coating of oil may also be applied to the lower deck area to minimize oxidation.
2. Check blades and blade bolts for wear and replace if necessary. See **"Cutter Blade Maintenance"** on page 29.
3. Inspect for loose, damaged, or worn parts and adjust or replace as needed.
4. Repaint parts where paint is worn or scratched to prevent rust.

Touch-Up Paint

Part No.	Part Description
821-070C	Gloss black enamel spray can
821-070CTU	Gloss black enamel bottle with brush
821-070CQT	Gloss black enamel quart
821-070CGL	Gloss black enamel gallon

5. Replace all damaged or missing decals.
6. Lubricate as noted in the *Lubrication* portion of this section starting on page 32.
7. Store the Rotary Cutter in a clean, dry place. The deck should be positioned on a flat surface to suitable skid steer hook-up height. Ensure that the main frame is stable.

Lubrication Points

Lubrication Legend	Multi-purpose spray lube	Multi-purpose grease lube	Multi-purpose oil lube	50 Hrs	Intervals in hours at which lubrication is required

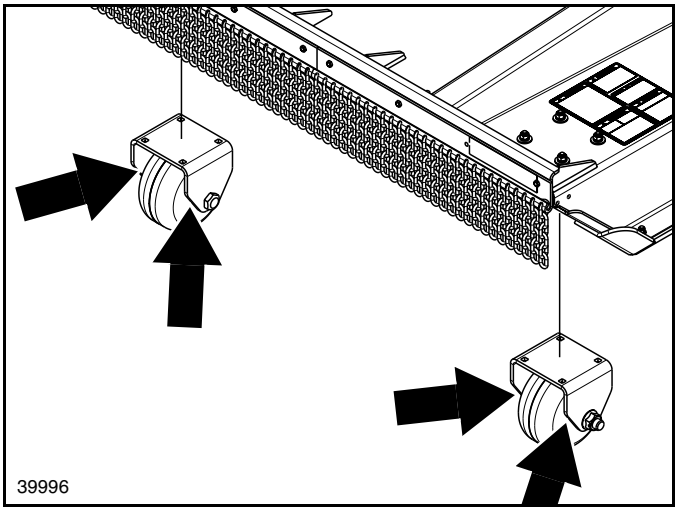

As Required

Front Rollers

2 - Rollers

Type of Lubrication: Lithium based spray lubricant

Quantity = As required

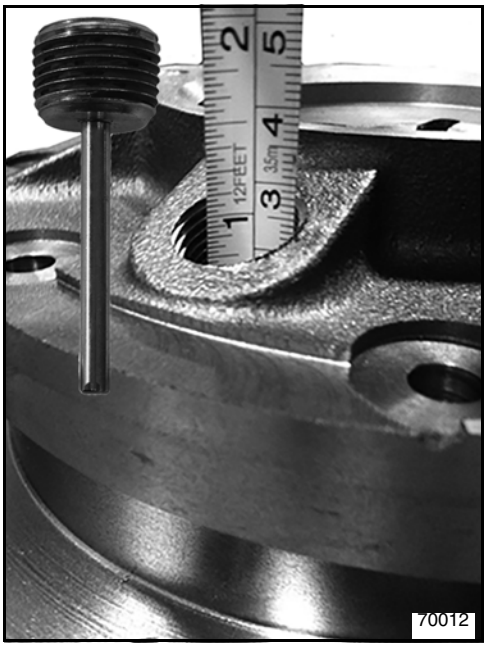

In Line Bearing Housing Lubrication

8 Hrs.

Motor Spindle Hub

The motor spindle hub has two 1/2" pipe plugs located on top side of deck housing.

1. Disengage blade hydraulics. Make sure blades have come to a complete stop.
2. Set cutter down on level ground.
3. Set park brake, shut engine off, and remove switch key before continuing.
4. Remove 1/2" dip stick. The end of the dipstick should have fluid on it. If it does not, add fluid.
5. Alternate method: Dip a tape measure 3/4" (19 mm) through the hole as shown. The end of the tape measure should have fluid on it. If it does not, add fluid.
6. Add EP 80-90 weight gearlube as required. Full capacity of motor housing is approximately:
   - 10 oz (0.3 L) for AuBurn gearbox with dipstick
   - 17 oz (0.5 L) for Eskridge gearbox without dipstick
7. Re-install dipstick and tighten.
8. Remove magnetic plug opposite side of dipstick. Check for metal filings and clean annually.

SC4060 & SC4072 Skid Steer Rotary Cutter

Specifications & Capacities			
		SC4060	**SC4072**
Cutter weight with skid shoes and without front roller wheels	lbs (kg)	1324 (600.6)	1634 (741.2)
Front roller wheels weight (Optional)	lbs (kg)	42 lbs (19.1)	
Optional protective door material & assembly weight	lbs (kg)	Clear polycarbonate shield 10 lbs (4.5)	
Hitch		Welded on	
Cutting width	in (m)	61.5 (1.56)	73.5 (1.87)
Overall width	in (m)	72 (1.83)	84.5 (2.15)
Overall length	in (m)	78 (1.98)	89 (2.26)
Cutting height	in (cm)	1 1/2 to 18 (3.8 to 45.7) infinitely variable.	
Cutting capacity	in (cm)	4 (10.2) Diameter	
Spindle hub oil capacity	oz (L)	Varies, refer to **"Motor Spindle Hub"** on page 32 10 (0.3) if AuBurn gearbox 17 (0.5) if Eskridge gearbox	
Spindle hub oil		EP 80-90 wt. gearlube	
Standard drive motor	gpm (lpm)	15-26 (56.8-98.4) flow	
High volume drive motor	gpm (lpm)	27-43 (102.2-162.8) flow	
Hydraulic pressure	psi (MPa)	1500 to 3500 (10.34 to 24.13)	
Deck thickness	in (mm)	1/4 (6)	
Side skirt construction	in (mm)	1/4 (6) Steel	
Deck wear protection		Four corner mounted skid shoes and two mid skid shoes	
Skid shoes construction	in (cm)	3/8 (10) plate	
Dishpan	in (mm)	Heavy-duty round 5/8 (16) plate	
Blade size	in (cm)	1/2 x 5 (1.3 x 12.7) bi-directional	
Blade rotation		Clockwise or counter clock wise	
Blade Bolt		1 1/8"-12 x 3 7/16" with key.	
16-26 gpm motor blade tip speed **27-43 gpm motor blade tip speed**	fpm (mps) gpm (lpm) fpm (mps) gpm (lpm)	14455 (73.4) at 26 (98.4) 15440 (78.4) at 43 (162.8)	17345 (88.1) at 26 (98.4) 18,527 fpm (94.1) at 43 (162.8)
Front deck protection		Single row chain guard	
Rear deck protection		Single row chain guard	
Deck lift height protection		Height adjustment safety chain	
Front rollers (Optional)		Welded round steel wheels	

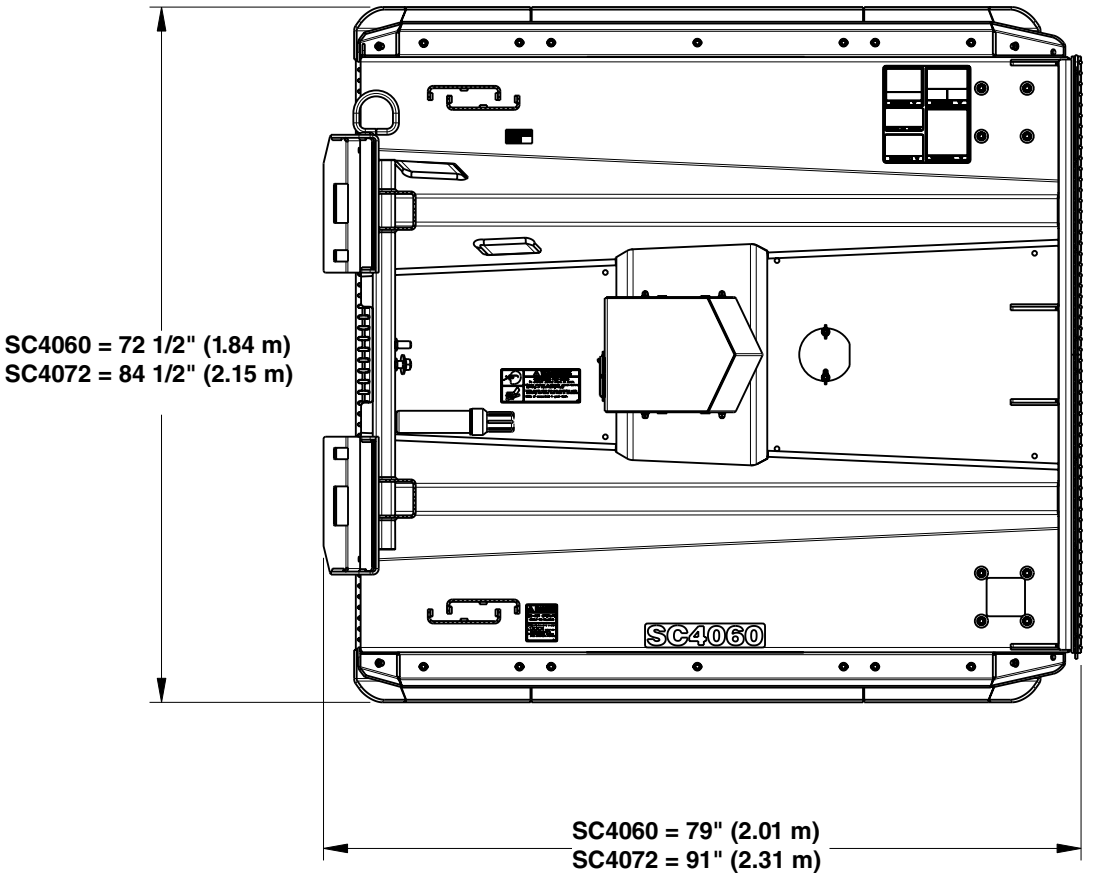
SC4060 = 72 1/2" (1.84 m)
SC4072 = 84 1/2" (2.15 m)
SC4060
SC4060 = 79" (2.01 m)
SC4072 = 91" (2.31 m)

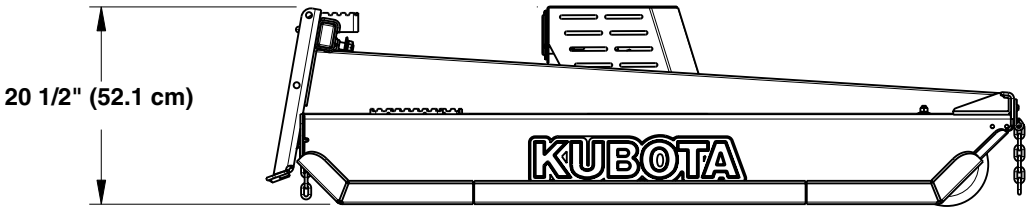
20 1/2" (52.1 cm)
KUBOTA

39997

SC40 Series (Skid Steer)

Features	Benefits
Standard motor @ 15 - 26 gpm (56.8 - 98.4 lpm) High flow motor @ 27 - 43 gpm (102.2 - 162.8 lpm)	Customer can choose one of two optional motors for the SC4060 or SC4072 cutter (standard and high flow). This allows the cutter to fit a wide variety of Skid Steers. Also the deck can be upgraded to a different motor when owner upgrades Skid Steer.
Case drain	Protects hydraulic motor.
1/4" (6 cm) Side panels for overall reinforcement	Protects sides from debris being thrown against them from the blades.
Front and rear chain guards	Single chain guards on the front and rear of deck. Reduces flying debris.
Replaceable skid shoes	Protect side plate structure. Shoes are replaceable for convenience.
1/2" x 5" (1.3 cm x 12.7 cm) Heat-treated free-swinging blades	Heat-treated blades offer longer life. Free-swinging blades protect from obstructions.
4" (10 cm) Diameter cutting capacity	Can aid in clearing brush.
SC4060 High blade tip speed	Standard motor = 14,455 fpm at 26 gpm (73.4 mps at 98.4 lpm). High flow motor = 15,440 fpm at 43 gpm (78.4 mps at 162.8 lpm).
SC4072 High blade tip speed	Standard motor = 17,345 fpm at 26 gpm (88.1 mps at 98.4 lpm). High flow motor = 18,527 fpm at 43 gpm (94.1 mps at 162.8 lpm).
Optional front roller wheels	Aid in the forward motion of the cutter and help protect against running the cutter frame into the ground. The rollers will also help in lengthening the life of the cutter's front end skid shoes.
Motor pressure gauge	Allows the operator to ensure that the motor is operating at proper psi.
Bi-directional blade rotation	Customer can switch direction of blade rotation to utilize both sides of blades.
Height adjustment safety chain	Provides additional operator protection from flying objects by allowing the Rotary Cutter to only be lifted up to 18" (45.7 cm).
Polycarbonate door (optional)	Provides layer of protection between the cutter and operator.

Troubleshooting Chart

Problem	Cause	Solution
Motor Oil Seal Leaking	Return line from motor has been pinched or is collapsed.	Replace lower seal of motor. Check motor return hose for kinks.
	Case drain line is not properly connected.	Connect case drain line to the hydraulic motor and skid steer reservoir.
Spindle Hub Seal Leaking	Seal is worn or torn.	Replace lower seal of motor and spindle hub output shaft seal. Check motor return hose for kinks.
Blades wearing excessively	Cutting on sandy ground.	Raise cutting height.
	Contacting ground frequently.	Raise cutting height.
Blades coming loose	Blade bolts not tightened properly.	Use new nut and torque blade bolt nuts to 450 ft lbs (610 Nm).
Blade carrier becomes loose	Running loose in the past.	Replace gearbox output shaft and blade carrier.
	Blade carrier hardware not tight enough.	Tighten to specified torque.
Blade bolt holes worn	Blade hardware running loose.	Replace blades and blade bolts if worn.
	Not maintaining tip speed.	Slow down to maintain tip speed.
Blades breaking	Hitting solid objects.	Thoroughly check the cutting area BEFORE beginning to cut. Be alert during cutting.
Blade carrier bent	Hitting solid objects.	Avoid solid objects/Be alert. Replace blade carrier.
Excessive skid shoe wear	Cutting height not level.	Adjust deck height or replace.
	Soil abrasive.	Raise cutting height.
	Cutting too low.	Raise cutting height.
Excessive vibration	Locked blades.	Inspect and unlock blades.
	Blades have unequal weight.	Replace blades in sets of 3.
	Blade carrier bent.	Replace blade carrier.

Torque Values Chart for Common Bolt Sizes

Bolt Size (inches)	Bolt Head Identification Grade 2		Grade 5		Grade 8	
in-tpi [1]	N · m [2]	ft-lb [3]	N · m	ft-lb	N · m	ft-lb
1/4" - 20	7.4	5.6	11	8	16	12
1/4" - 28	8.5	6	13	10	18	14
5/16" - 18	15	11	24	17	33	25
5/16" - 24	17	13	26	19	37	27
3/8" - 16	27	20	42	31	59	44
3/8" - 24	31	22	47	35	67	49
7/16" - 14	43	32	67	49	95	70
7/16" - 20	49	36	75	55	105	78
1/2" - 13	66	49	105	76	145	105
1/2" - 20	75	55	115	85	165	120
9/16" - 12	95	70	150	110	210	155
9/16" - 18	105	79	165	120	235	170
5/8" - 11	130	97	205	150	285	210
5/8" - 18	150	110	230	170	325	240
3/4" - 10	235	170	360	265	510	375
3/4" - 16	260	190	405	295	570	420
7/8" - 9	225	165	585	430	820	605
7/8" - 14	250	185	640	475	905	670
1" - 8	340	250	875	645	1230	910
1" - 12	370	275	955	705	1350	995
1-1/8" - 7	480	355	1080	795	1750	1290
1-1/8" - 12	540	395	1210	890	1960	1440
1-1/4" - 7	680	500	1520	1120	2460	1820
1-1/4" - 12	750	555	1680	1240	2730	2010
1-3/8" - 6	890	655	1990	1470	3230	2380
1-3/8" - 12	1010	745	2270	1670	3680	2710
1-1/2" - 6	1180	870	2640	1950	4290	3160
1-1/2" - 12	1330	980	2970	2190	4820	3560

Bolt Size (Metric)	Bolt Head Identification 5.8 Class 5.8		8.8 Class 8.8		10.9 Class 10.9	
mm x pitch [4]	N · m	ft-lb	N · m	ft-lb	N · m	ft-lb
M 5 X 0.8	4	3	6	5	9	7
M 6 X 1	7	5	11	8	15	11
M 8 X 1.25	17	12	26	19	36	27
M 8 X 1	18	13	28	21	39	29
M10 X 1.5	33	24	52	39	72	53
M10 X 0.75	39	29	61	45	85	62
M12 X 1.75	58	42	91	67	125	93
M12 X 1.5	60	44	95	70	130	97
M12 X 1	90	66	105	77	145	105
M14 X 2	92	68	145	105	200	150
M14 X 1.5	99	73	155	115	215	160
M16 X 2	145	105	225	165	315	230
M16 X 1.5	155	115	240	180	335	245
M18 X 2.5	195	145	310	230	405	300
M18 X 1.5	220	165	350	260	485	355
M20 X 2.5	280	205	440	325	610	450
M20 X 1.5	310	230	650	480	900	665
M24 X 3	480	355	760	560	1050	780
M24 X 2	525	390	830	610	1150	845
M30 X 3.5	960	705	1510	1120	2100	1550
M30 X 2	1060	785	1680	1240	2320	1710
M36 X 3.5	1730	1270	2650	1950	3660	2700
M36 X 2	1880	1380	2960	2190	4100	3220

[1] in-tpi = nominal thread diameter in inches-threads per inch

[2] N· m = newton-meters

[3] ft-lb= foot pounds

[4] mm x pitch = nominal thread diameter in millimeters x thread pitch

Torque tolerance + 0%, -15% of torquing values. Unless otherwise specified use torque values listed above.
All locknuts or lubricated fasteners: Use 75% of torque value. (i.e. 1/2"-13 GR5 = 76 ft-lb; 75% of 76 or .75 x 76 = 57 ft-lb)

Additional Torque Values

Blade Bolt Locknut	450 ft-lbs (610 Nm)
Blade Carrier Hub Nut	150 ft-lbs (205 Nm) (apply blue Loctite)

Warranty

Land Pride warrants to the original purchaser that this Land Pride product will be free from defects in material and workmanship beginning on the date of purchase by the end user according to the following schedule when used as intended and under normal service and conditions for personal use.

Overall Unit: One year Parts and Labor

Motor: Two years Parts and Labor.

Blades and Tires: Considered wear items.

This Warranty is limited to the repair or replacement of any defective part by Land Pride and the installation by the dealer of any such replacement part, and does not cover common wear items. Land Pride reserves the right to inspect any equipment or parts which are claimed to have been defective in material or workmanship.

This Warranty does not apply to any part or product which in Land Pride's judgment shall have been misused or damaged by accident or lack of normal maintenance or care, or which has been repaired or altered in a way which adversely affects its performance or reliability, or which has been used for a purpose for which the product is not designed. Misuse also specifically includes failure to properly maintain oil levels, grease points, and driveline shafts.

Claims under this Warranty should be made to the dealer which originally sold the product and all warranty adjustments must be made through an authorized Land Pride dealer. Land Pride reserves the right to make changes in materials or design of the product at any time without notice.

This Warranty shall not be interpreted to render Land Pride liable for damages of any kind, direct, consequential, or contingent to property. Furthermore, Land Pride shall not be liable for damages resulting from any cause beyond its reasonable control. This Warranty does not extend to loss of crops, any expense or loss for labor, supplies, rental machinery or for any other reason.

No other warranty of any kind whatsoever, express or implied, is made with respect to this sale; and all implied warranties of merchantability and fitness for a particular purpose which exceed the obligations set forth in this written warranty are hereby disclaimed and excluded from this sale.

This Warranty is not valid unless registered with Land Pride within 30 days from the date of original purchase.

IMPORTANT: The Online Warranty Registration should be completed by the dealer at the time of purchase. This information is necessary to provide you with quality customer service.

Model Number _____ **Serial Number** _____

Legal Disclaimer

Kubota Corporation notes that specifications and technical information are subject to change without notice and Kubota does not represent or warrant that the information in this publication is completely accurate or current; however, Kubota used reasonable efforts to set forth and include accurate and up to date information in this publication. Kubota disclaims all representations and warranties, whether express or implied, including, but not limited to, warranties of merchantability and fitness for a particular purpose and Kubota shall not be liable for any damages, whether compensatory, direct, indirect, incidental, special, or consequential, arising out of or in connection with the use of this publication, or in the information therein.

The Product(s) described in this Publication are designed and manufactured only for the country in which they are initially wholesaled by Kubota. Kubota does not provide parts, warranty or service for any Product which is re-sold or retailed in any country other than the country for which the Product(s) were designed or manufactured.

KUBOTA TRACTOR CORPORATION
1000 Kubota Drive, Grapevine, TX 76051
Telephone: (817) 756-1171

Western Division: 1175 S. Guild Ave., Lodi, CA 95240
Telephone: (209) 334-9910

Midwest Division: 31700 W. 207th ST., Edgerton, KS 66021
Telephone: (913) 215-5915

Central Division: 14855 FAA Blvd., Fort Worth, TX 76155
Telephone: (817) 571-0900

Northern Division: 6300 at One Kubota Way, Groveport, OH 43125
Telephone: (614) 835-1100

Southeast Division: 1025 Northbrook Parkway, Suwanee, GA 30024
Telephone: (770) 995-8855