Table of Contents

Rotary Cutters

RCB6010 & RCB6015 (540 RPM) and RCMB6010 & RCMB6015 (1000 RPM)

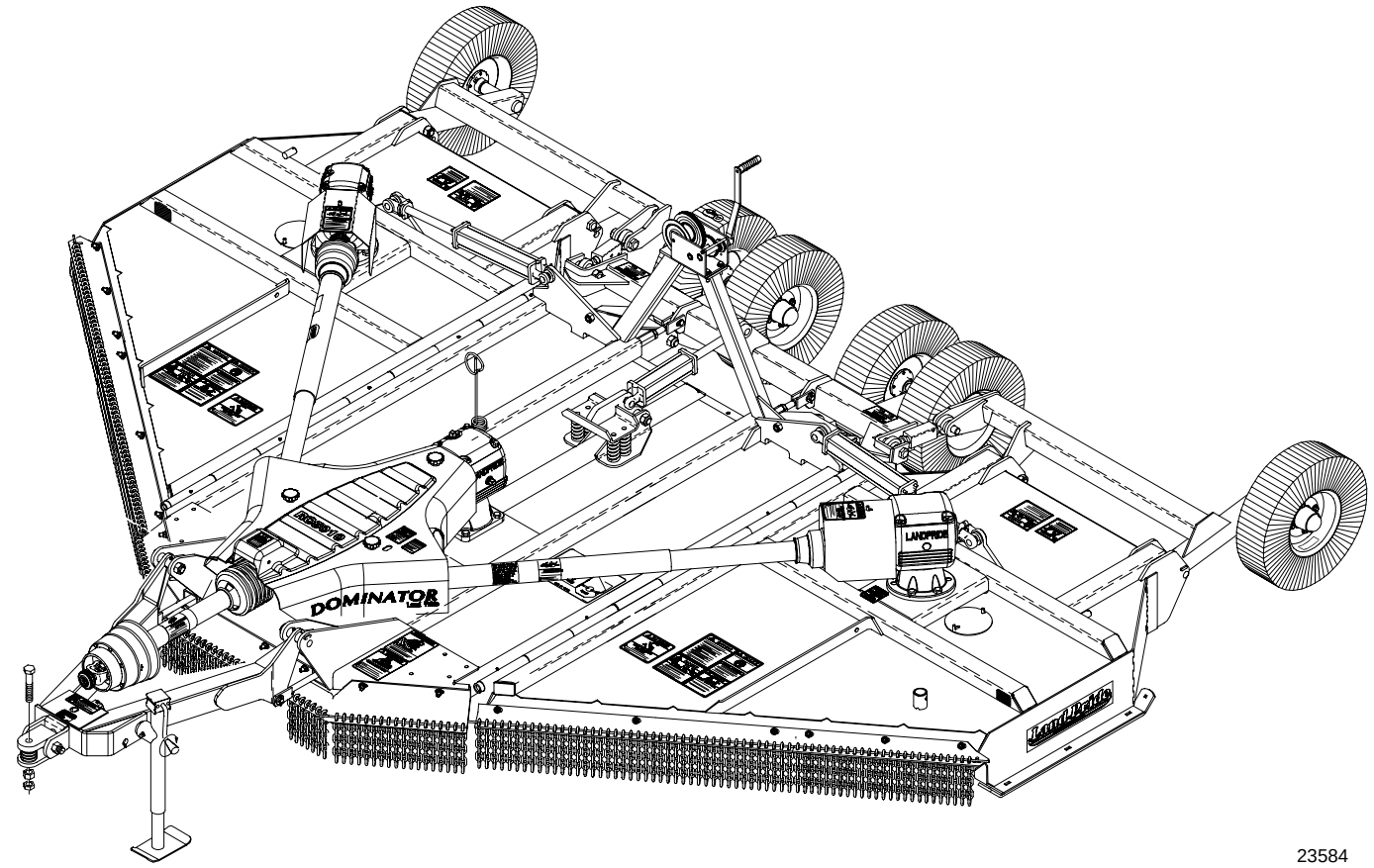

23584

318-263M
Operator's Manual

Read the Operator's Manual entirely. When you see this symbol, the subsequent instructions and warnings are serious - follow without exception. Your life and the lives of others depend on it!

© Copyright 2013 Printed **8/08/13**

Cover photo may show optional equipment not supplied with standard unit.

Important Safety Information 1
Safety at All Times 1
Look For The Safety Alert Symbol 1
Safety Labels 4
Introduction 10
Application 10
Using This Manual 10
Terminology 10
Definitions 10
Owner Assistance 10
Serial Number 10
Free Maintenance Video 10
Further Assistance 10
Section 1: Preparation and Set-up 11
Tractor Requirements 11
Horsepower 11
Hitch 11
Hydraulic Outlets 11
PTO Speed 11
Before You Start 11
Dealer Assembly & Preparations 11
Hitch Assembly 12
Wing Axle Assembly 12
Hydraulic Plumbing 12
Hitch Types 13
Swivel Clevis Hitch 13
Bar-Tite Clevis Hitch 13
Tractor Hook-up to Swivel Clevis Hitch 13
Tractor Hook-up to Bar-Tite Clevis Hitch 14
Driveline Hook-up 14
Hydraulic Hook-up 15
Unhooking From the Cutter 16
Section 2: Operating Instructions 17
Pre-start Checklist 17
Cutter Set-up For Transporting 17
Transporting The Cutter 18
Cutter Set-up For Field Operation 18
Operating Speed & Turning Angle 18
Optional Manual Wing Lift (Winch) 19
General Operating Instructions 19
Section 3: Adjustments 21
Center and Wing Section Leveling 21
Cutting Height Adjustment 21
Section 4: Maintenance & Lubrication . .22
General Maintenance Information 22
Cutter Blade Maintenance 22
Drivelines With Slip Clutches 23
Type A Clutches 23
Type B Clutches 25
Type C Clutches 26
Skid Shoe Maintenance 27
Center Skid Shoe 27
Wing Skid Shoe 28
Weight Box Skid Shoe 28
Tractor Maintenance 28
Storage 28
Lubrication Points 29
Axle Hub Bearing 29
Adjustable Turnbuckle 29
Main Hitch 30
Wing Hinges 30
Double Swivel Clevis Hitch 30
Bar-Tite Clevis Hitch 30
Divider Box 31
Gearbox 31
Intermediate Driveline Joints 31
Conventional Driveline Profile Tubes 32
Conventional Driveline Joints & Shields 32
Constant Velocity Driveline Profile Tubes 33
Constant Velocity Driveline Joints & Shields . . 33
Wing Driveline Profile Tubes 34
Wing Driveline Joints & Shields 34
Section 5: Specifications & Capacities . .35
Section 6: Features and Benefits 36
Section 7: Troubleshooting 37
Section 8: Appendix 38
Torque Values Chart 38
Tire Inflation Chart 38
Warranty 39

© Copyright 2013 All rights Reserved

Land Pride provides this publication "as is" without warranty of any kind, either expressed or implied. While every precaution has been taken in the preparation of this manual, Land Pride assumes no responsibility for errors or omissions. Neither is any liability assumed for damages resulting from the use of the information contained herein. Land Pride reserves the right to revise and improve its products as it sees fit. This publication describes the state of this product at the time of its publication, and may not reflect the product in the future.

Land Pride is a registered trademark.

All other brands and product names are trademarks or registered trademarks of their respective holders.

Printed in the United States of America.

These are common practices that may or may not be applicable to the products described in this manual.

Safety at All Times

Thoroughly read and understand the instructions given in this manual before operation. Refer to the "Safety Label" section, read all instructions noted on them.

Do not allow anyone to operate this equipment who has not fully read and comprehended this manual and who has not been properly trained in the safe operation of the equipment.

- ▲ Operator should be familiar with all functions of the unit.
- ▲ The operator must not use drugs or alcohol as they can change the alertness or coordination of that person while operating equipment. The operator should, if taking over-the-counter drugs, seek medical advice on whether he/she can safely operate the equipment.
- ▲ Operate implement from the driver's seat only.
- ▲ Make sure all guards and shields are in place and secured before operating the implement.
- ▲ Do not leave tractor or implement unattended with engine running.
- ▲ Dismounting from a moving tractor could cause serious injury or death.
- ▲ Do not allow anyone to stand between tractor and implement while backing up to implement.
- ▲ Keep hands, feet, and clothing away from power-driven parts.
- ▲ Wear snug fitting clothing to avoid entanglement with moving parts.
- ▲ Watch out for wires, trees, etc., when raising implement. Make sure all persons are clear of working area.
- ▲ Turning tractor too tight may cause implement to ride up on wheels. This could result in injury or equipment damage.

Look For The Safety Alert Symbol

The SAFETY ALERT SYMBOL indicates there is a potential hazard to personal safety involved and extra safety precaution must be taken. When you see this symbol, be alert and carefully read the message that follows it. In addition to design and configuration of equipment, hazard control and accident prevention are dependent upon the awareness, concern, prudence and proper training of personnel involved in the operation, transport, maintenance and storage of equipment.

Be Aware of Signal Words

A Signal word designates a degree or level of hazard seriousness. The signal words are:

DANGER
Indicates an imminently hazardous situation which, if not avoided, will result in death or serious injury. This signal word is limited to the most extreme situations, typically for machine components that, for functional purposes, cannot be guarded.

WARNING
Indicates a potentially hazardous situation which, if not avoided, could result in death or serious injury, and includes hazards that are exposed when guards are removed. It may also be used to alert against unsafe practices.

CAUTION
Indicates a potentially hazardous situation which, if not avoided, may result in minor or moderate injury. It may also be used to alert against unsafe practices.

For Your Protection

- ▲ Thoroughly read and understand the "Safety Label" section, read all instructions noted on them.

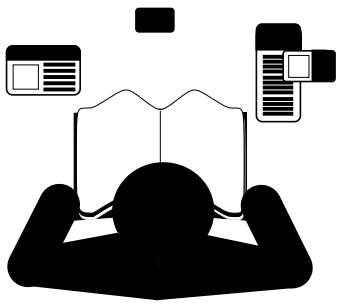

Shutdown and Storage

- ▲ Lower machine to ground, put tractor in park, turn off engine, and remove the key.
- ▲ Detach and store implements in an area where children normally do not play. Secure implement by using blocks and supports.

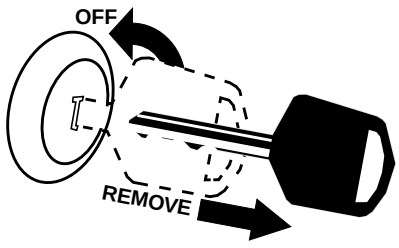

These are common practices that may or may not be applicable to the products described in this manual.

Use Safety Lights and Devices

- ▲ Slow-moving tractors, self-propelled equipment and towed implements can create a hazard when driven on public roads. They are difficult to see, especially at night.
- ▲ Flashing warning lights and turn signals are recommended whenever driving on public roads. Use lights and devices provided with implement.

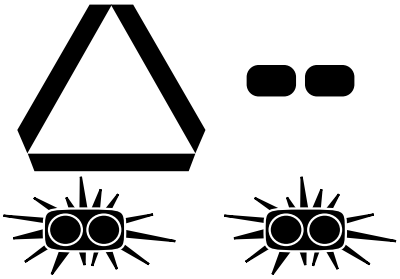

Transport Machinery Safely

- ▲ Comply with state and local laws.
- ▲ Maximum transport speed for implement is 20 mph. DO NOT EXCEED. Never travel at a speed which does not allow adequate control of steering and stopping. Some rough terrain require a slower speed.
- ▲ Sudden braking can cause a towed load to swerve and upset. Reduce speed if towed load is not equipped with brakes.
- ▲ Use the following maximum speed - tow load weight ratios as a guideline:
- ▲ **20 mph** when weight is less than or equal to the weight of tractor.

  10 mph when weight is more than weight of tractor but less than double the weight of tractor.
- ▲ **IMPORTANT:** Do not tow a load that is more than double the weight of tractor.

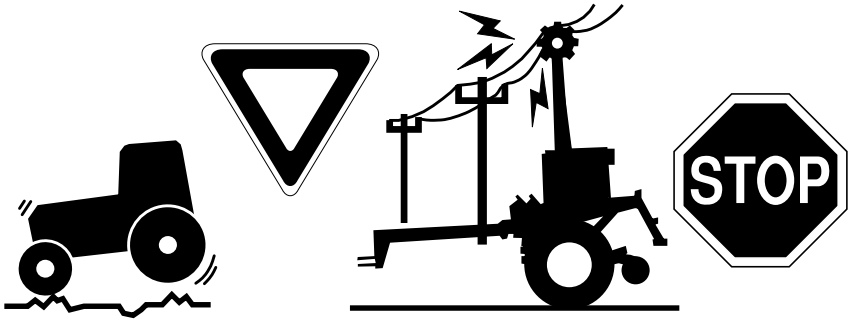

Use A Safety Chain

- ▲ A safety chain will help control drawn machinery should it separate from the tractor drawbar.
- ▲ Use a chain with the strength rating equal to or greater than the gross weight of the towed machinery.
- ▲ Attach the chain to the tractor drawbar support or other specified anchor location. Allow only enough slack in the chain to permit turning.
- ▲ Do not use safety chain for towing.

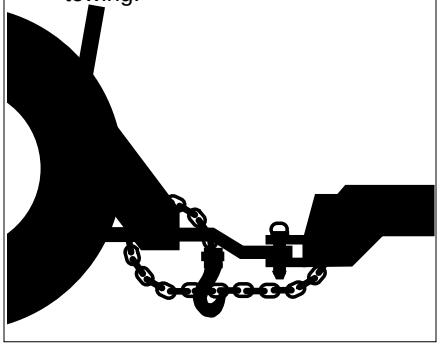

Practice Safe Maintenance

- ▲ Understand procedure before doing work. Use proper tools and equipment, refer to Operator's Manual for additional information.
- ▲ Work in a clean dry area.
- ▲ Lower the implement to the ground, put tractor in park, turn off engine, and remove key before performing maintenance.
- ▲ Allow implement to cool completely.
- ▲ Do not grease or oil implement while it is in operation.
- ▲ Inspect all parts. Make sure parts are in good condition & installed properly.
- ▲ Remove buildup of grease, oil, or debris.
- ▲ Remove all tools and unused parts from implement before operation.

These are common practices that may or may not be applicable to the products described in this manual.

Prepare for Emergencies

- ▲ Be prepared if a fire starts.
- ▲ Keep a first aid kit and fire extinguisher handy.
- ▲ Keep emergency numbers for doctor, ambulance, hospital, and fire department near phone.

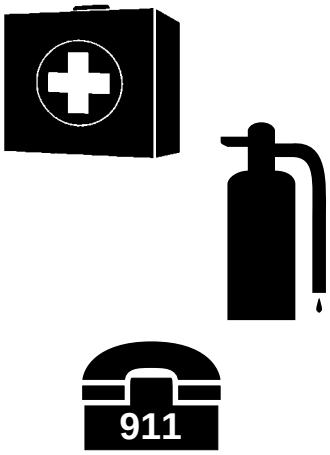

Wear Protective Equipment

- ▲ Wear protective clothing and equipment appropriate for the job. Avoid loose fitting clothing.
- ▲ Prolonged exposure to loud noise can cause hearing impairment or hearing loss. Wear suitable hearing protection such as earmuffs or earplugs.
- ▲ Operating equipment safely requires the full attention of the operator. Avoid wearing radio headphones while operating machinery.

Avoid High Pressure Fluids Hazard

- ▲ Escaping fluid under pressure can penetrate the skin causing serious injury.
- ▲ Avoid the hazard by relieving pressure before disconnecting hydraulic lines or performing work on the system.
- ▲ Make sure all hydraulic fluid connections are tight and all hydraulic hoses and lines are in good condition before applying pressure to the system.
- ▲ Use a piece of paper or cardboard, NOT BODY PARTS, to check for suspected leaks.
- ▲ Wear protective gloves and safety glasses or goggles when working with hydraulic systems.
- ▲ **DO NOT DELAY.** If an accident occurs, see a doctor familiar with this type of injury immediately. Any fluid injected into the skin or eyes must be treated within a few hours or gangrene may result.

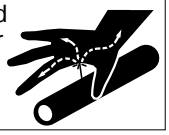

Tire Safety

- ▲ Tire changing can be dangerous and should be preformed by trained personnel using the correct tools and equipment.
- ▲ When inflating tires, use a clip-on chuck and extension hose long enough to allow you to stand to one side and NOT in front of or over the tire assembly. Use a safety cage if available.
- ▲ When removing and installing wheels, use wheel handling equipment adequate for the weight involved.

Use Seat Belt and ROPS

- ▲ Operate only tractors equipped with Roll-Over Protective Structure (ROPS) and seat belt.
- ▲ Fasten seat belt snugly and securely to help protect operator from being thrown, crushed, or severely injured if a rollover occurs; and from falling off the tractor and being ran over by the tractor and/or cutter. Not using the seat belt can result in serious injury or death.
- ▲ Wearing protective equipment such as safety shoes, safety glasses, hard hat, and ear plugs is highly recommended.

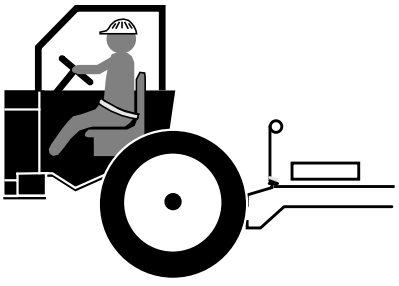

Keep Riders Off Machinery

- ▲ Riders obstruct the operator's view, they could be struck by foreign objects or thrown from the machine.
- ▲ Never allow children to operate equipment.

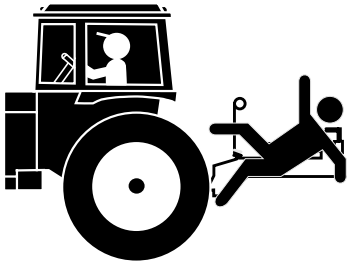

Safety Labels

Your Rotary Cutter comes equipped with all safety labels in place. They were designed to help you safely operate your implement. Read and follow their directions.

1. *Keep all safety labels clean and legible.*
2. *Refer to this section for proper label placement. Replace all damaged or missing labels. Order new labels from your nearest Land Pride dealer. To find your nearest dealer, visit our dealer locator at www.landpride.com.*
3. *Some new equipment installed during repair requires safety labels to be affixed to the replaced component as specified by Land Pride. When ordering new components make sure the correct safety labels are included in the request.*
4. *Refer to this section for proper label placement.*
   To install new labels:
   a. *Clean the area the label is to be placed.*
   b. *Spray soapy water on the surface where the label is to be placed.*
   c. *Peel backing from label. Press firmly onto the surface.*
   d. *Squeeze out air bubbles with the edge of a credit card or with a similar type straight edge.*

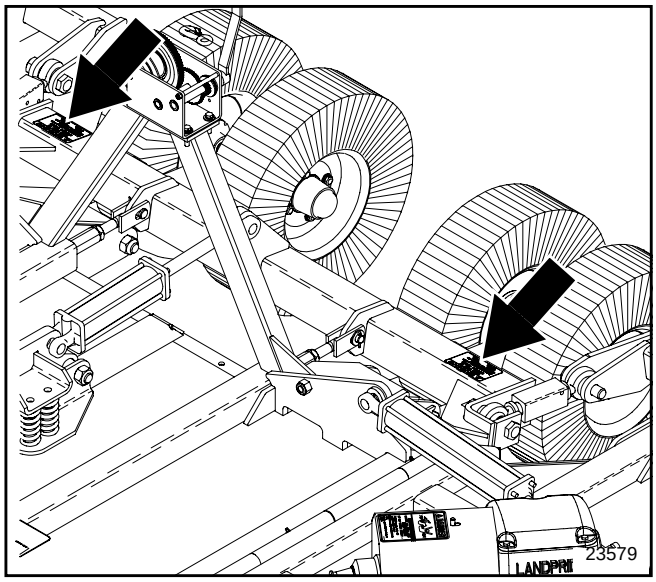

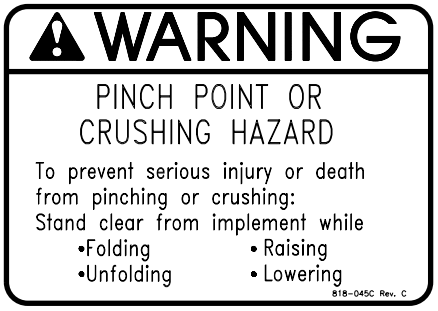

818-045C
Pinch Point Warning

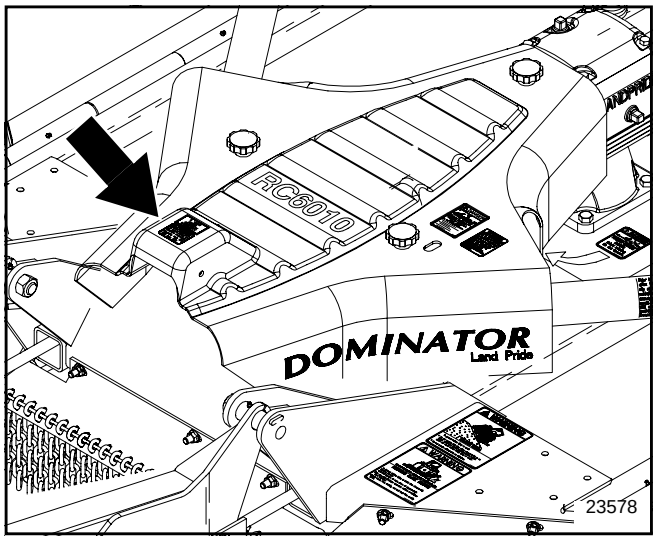

818-130C
Caution! Use 540 rpm PTO only

818-240C
Caution! Use 1000 rpm PTO only

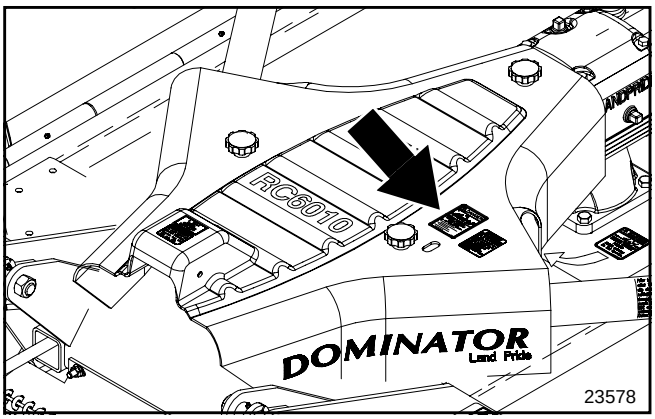

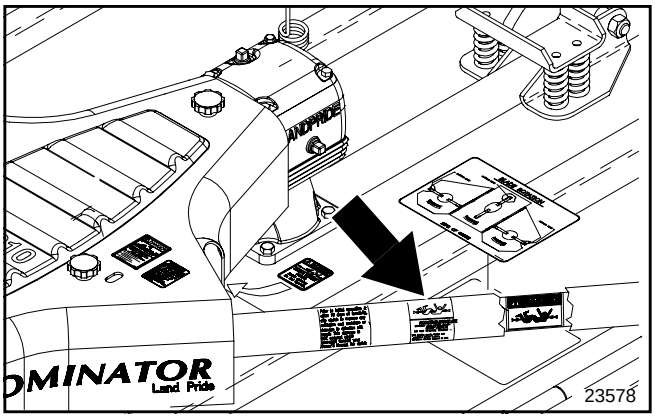

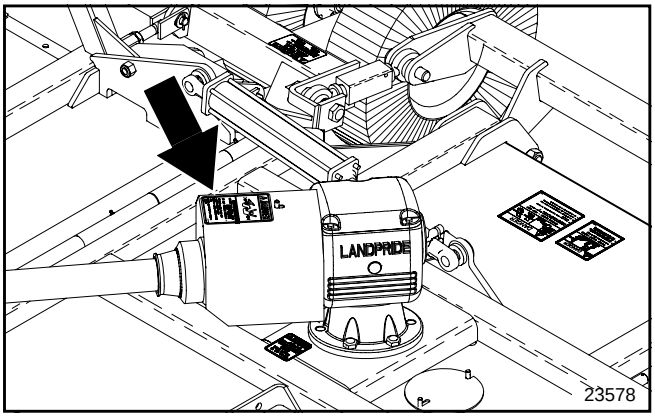

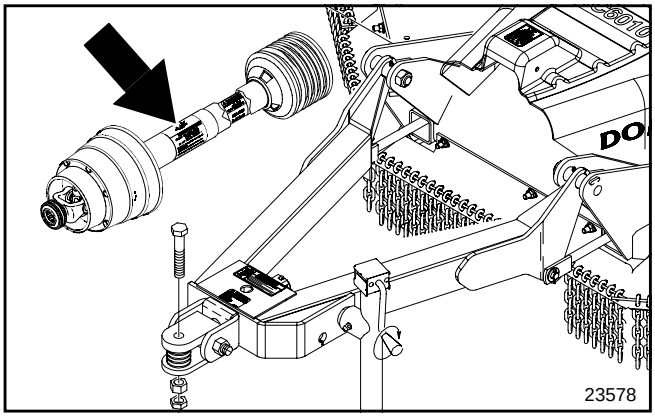

818-552C

Danger! Rotating Driveline Entanglement Hazard

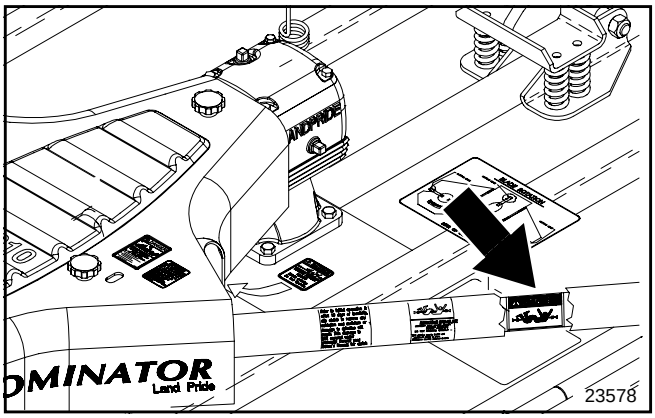

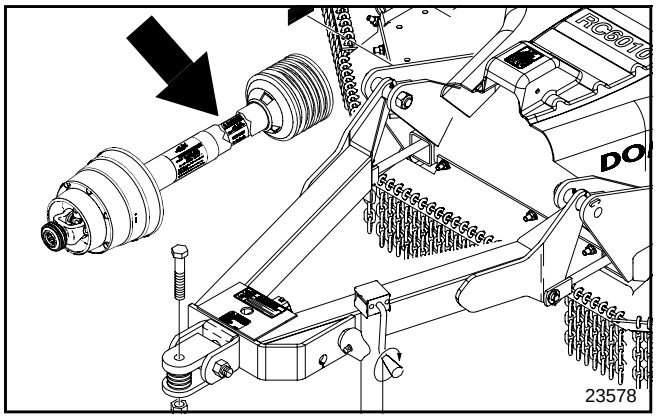

818-540C
Danger! Shield Missing - DO NOT Operate

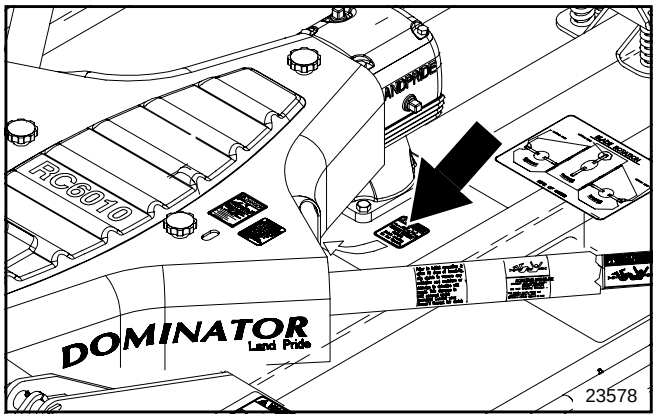

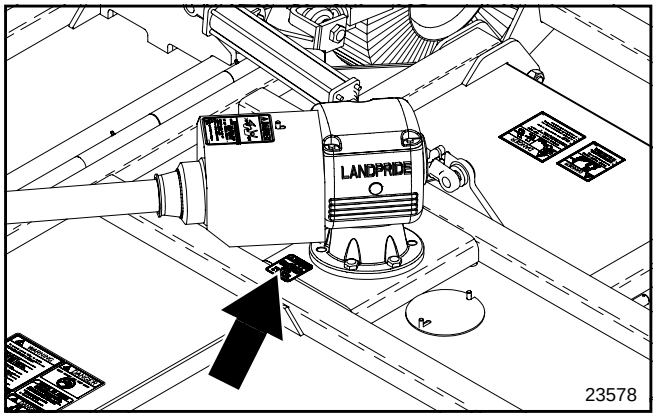

818-543C
Danger! Guard Missing - DO NOT Operate

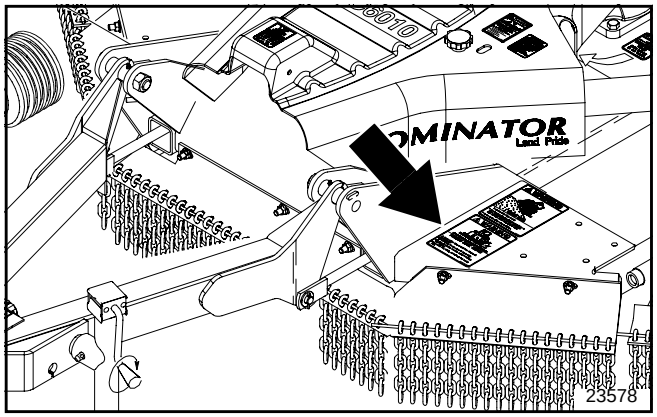

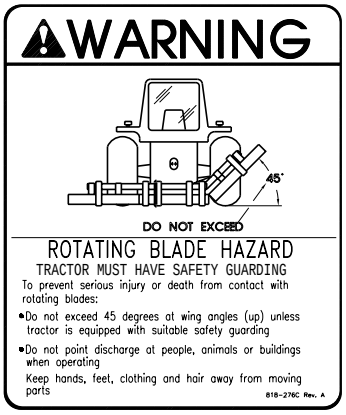

818-276C
Warning! Rotating Blade Hazard

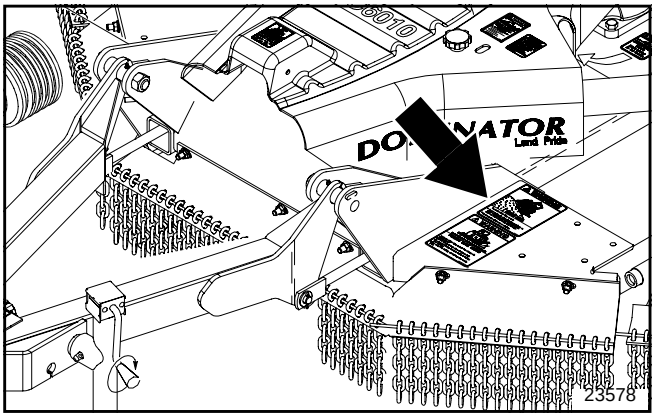

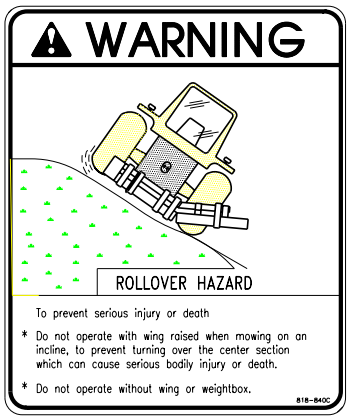

818-840C
Danger: Rollover Hazard

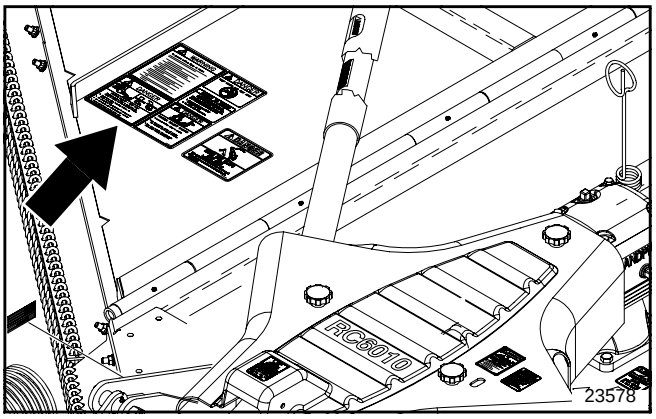

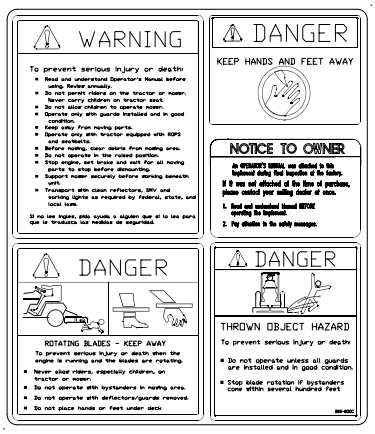

818-830C
Safety Combo

Located on Left Wing & Right Wing

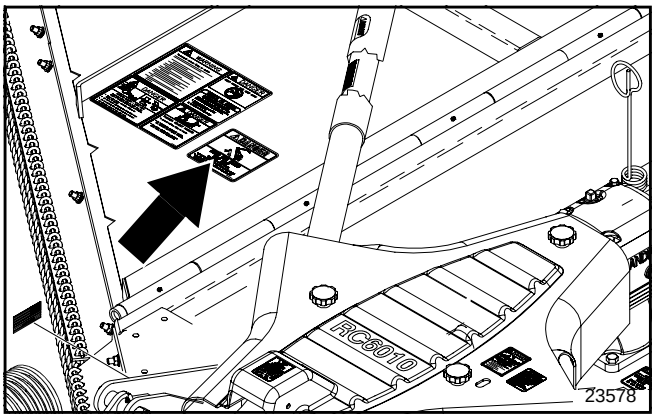

818-561C
Warning! Raised Wing Hazard

Located on Left Wing & Right Wing

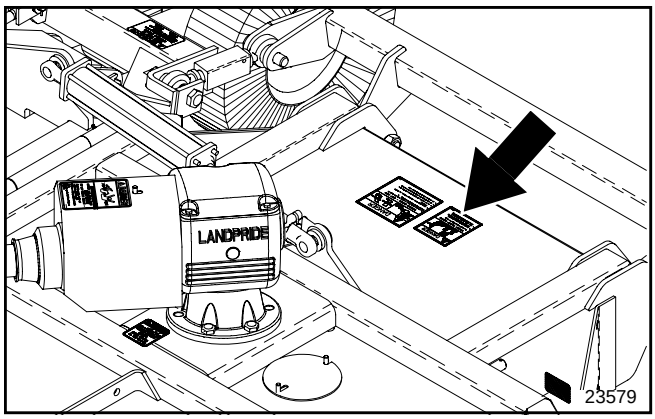

818-556C
Danger! Thrown Object Hazard

Located on Left Wing & Right Wing

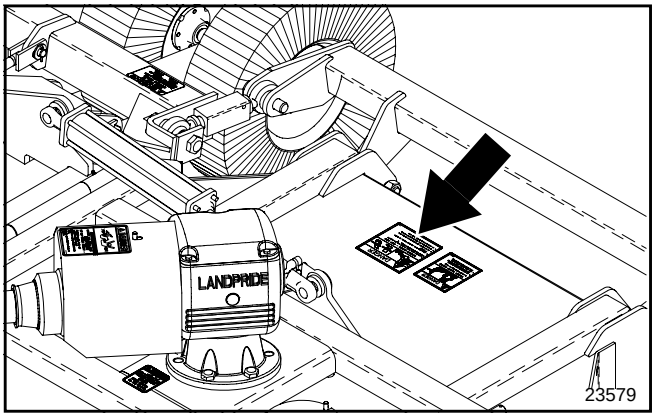

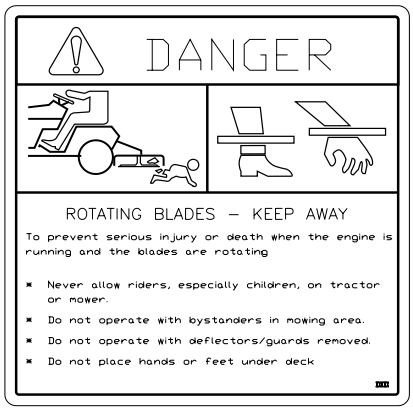

818-564C
Danger! Rotating Blade

Located on Left Wing & Right Wing

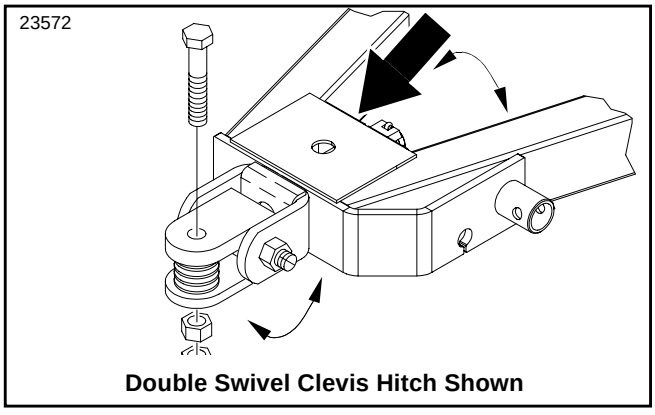

Double Swivel Clevis Hitch Shown

838-094C
Warning: High Pressure

Located on
Double Swivel Clevis Hitch flat plate and Bar-Tite Clevis Hitch flat plate

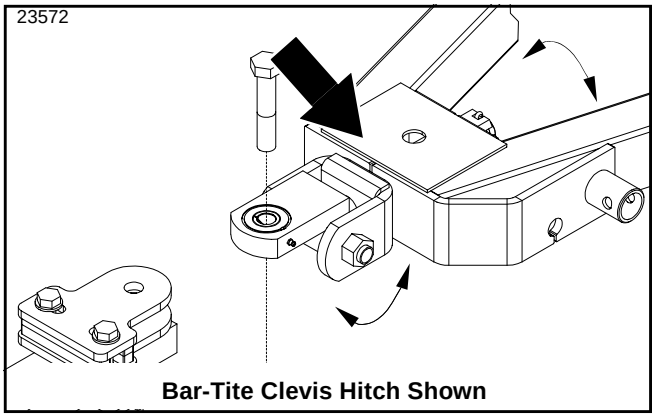

Bar-Tite Clevis Hitch Shown

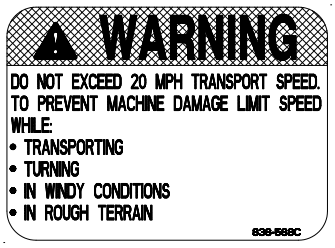

838-588C
Warning: Folding Cutter Speed Warning

Located on
Double Swivel Clevis Hitch flat plate and Bar-Tite Clevis Hitch flat plate

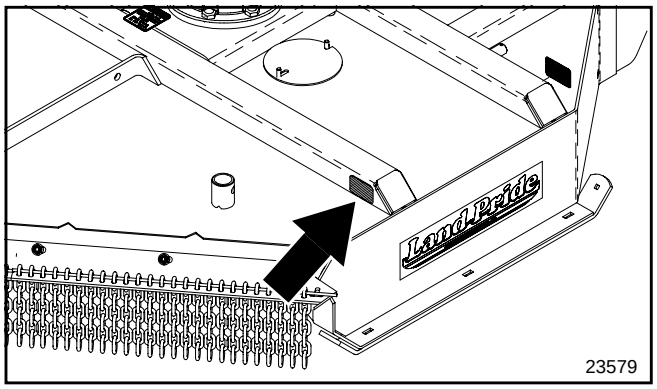

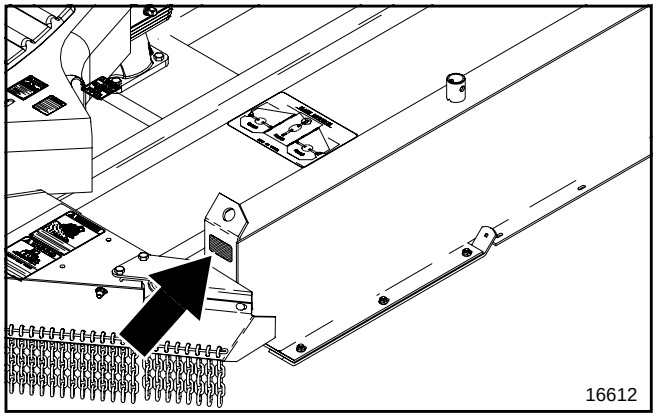

818-229C

Amber Reflector

Located on Left Wing,
Right Wing and Weight Box

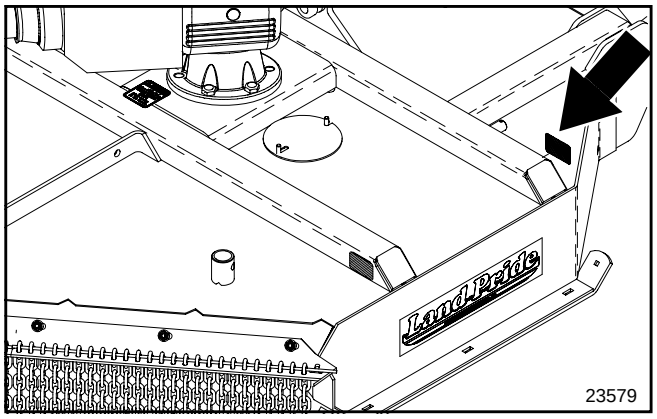

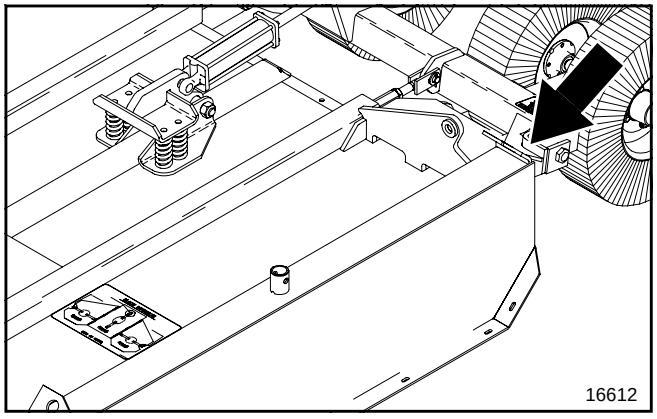

818-230C

Red Reflector

Located on Left Wing and Right Wing

Land Pride welcomes you to the growing family of new product owners.

This Rotary Cutter has been designed with care and built by skilled workers using quality materials. Proper assembly, maintenance, and safe operating practices will help you get years of satisfactory use from this machine.

Application

The heavy duty RCB6010, RCMB6010, RCB6015 and RCMB6015 Series Rotary Cutters are designed and built by Land Pride to provide excellent cutting performance on gently sloping or slightly contoured right-of ways, roadsides, pastures, set-aside-acres, or for residue in row crop fields. The 10' & 15' cutting width, 2" to 14" cutting height and ability to cut weeds and brush make them well suited for these applications. All listed models offer pull-type self-leveling clevis hitches for attachment to 50-250 hp tractors. The 60 series feature a Cat. 5 main driveline and offer various safety guard selections making them an excellent choice for state and municipal mowing applications.

See "**Section 5: Specifications & Capacities**" and "**Section 6: Features and Benefits**" for additional information and performance enhancing options.

Using This Manual

- This Operator's Manual is designed to help familiarize you with safety, assembly, operation, adjustments, troubleshooting, and maintenance. Read this manual and follow the recommendations to help ensure safe and efficient operation.
- The information contained within this manual was current at the time of printing. Some parts may change slightly to assure you of the best performance.
- To order a new Operator's or Parts Manual, contact your authorized dealer. Manuals can also be downloaded, free-of-charge, from our website at www.landpride.com

Terminology

"Right" or "Left" as used in this manual is determined by facing the direction the machine will operate while in use unless otherwise stated.

Definitions

IMPORTANT: A special point of information related to its preceding topic. Land Pride's intention is that this information should be read and noted before continuing.

NOTE: A special point of information that the operator must be aware of before continuing.

Owner Assistance

The Warranty Registration card should be filled out by the dealer at the time of purchase. This information is necessary to provide you with quality customer service.

The Online Warranty Registration should be completed by the dealer at the time of purchase. This information is necessary to provide you with quality customer service.

The parts on your Rotary Cutter have been specially designed by Land Pride and should only be replaced with genuine Land Pride parts. Contact a Land Pride dealer if customer service or repair parts are required. Your Land Pride dealer has trained personnel, repair parts, and equipment needed to service the implement.

Serial Number

Model No. _____Serial No. _____

For quick reference and prompt service, record model and serial number in the spaces provided above and again on warranty page 39. Always provide model number and serial number when ordering parts and in all correspondences with your Land Pride dealer. Refer to Figure 1 for location of your serial number plate.

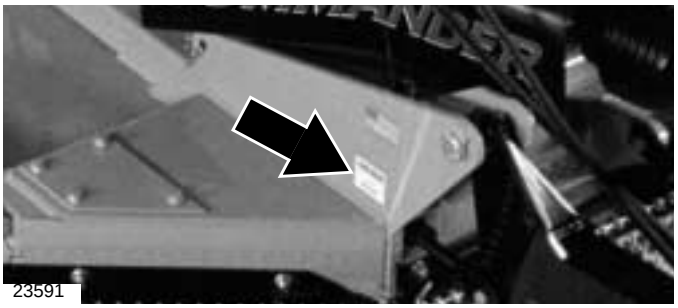

Serial Number Plate Location
Figure 1

Free Maintenance Video

Be sure to request your free copy of the **15' Rotary Cutter Maintenance Guidelines** video from your local Land Pride dealer.

Further Assistance

Your dealer wants you to be satisfied with your new cutter. If for any reason you do not understand any part of this manual or are not satisfied with the service received, the following actions are suggested:

1. Discuss the matter with your dealership service manager making sure that person is aware of any problems you may have and has had the opportunity to assist you.
2. If you are still not satisfied, seek out the owner or general manager of the dealership, explain the problem, and request assistance.
3. For further assistance write to:

Land Pride Service Department
1525 East North Street
P.O. Box 5060
Salina, Ks. 67402-5060

E-mail address
lpservicedept@landpride.com

Tractor Requirements

Horsepower

The cutter is designed to be used on tractors with 50 to 250 hp.

Hitch

Refer to Figure 1-1:

The cutter uses a drawbar type hitch hook-up. Maintain proper distance, dimension “A”, between center of drawbar hitch pin hole and end of tractor PTO shaft.

- “A” = 14" for 540 rpm
- “A” = 16" for 1000 rpm
- “B” = 8" for 540 rpm and 1000 rpm
- “C” = 18” to 21” for 540 rpm and 1000 rpm

IMPORTANT: PTO damage may occur if distance “A” is not properly maintained.

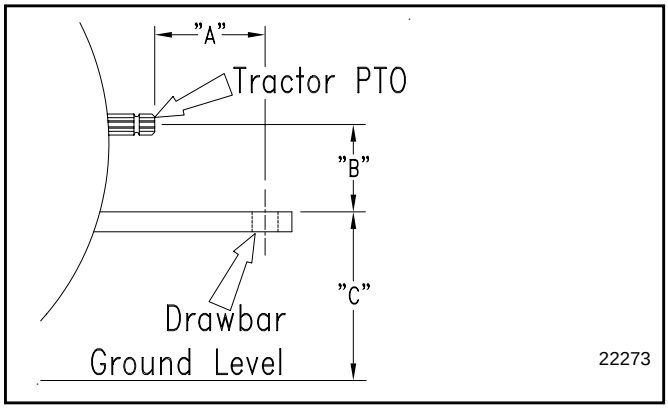

PTO to Drawbar Distance
Figure 1-1

Hydraulic Outlets

The number of required hydraulic duplex outlets is dependent upon how the Rotary Cutter is set-up. The tractor will require two duplex outlets for the 10’ and 15’ series. Three duplex outlets are required for the 15’ series if the wings are raised and lowered independently.

- Two duplex outlets are required for the 10’ and 15’ series.
- Three duplex outlets are required if the wings on the 15’ series are raised and lowered independently.

Control valve kits are available from your local Land Pride dealer if the tractor is not equipped with the correct number of duplex outlets.

PTO Speed

CAUTION!

Do not over speed PTO. The cutter can be damaged when operated above its rated PTO RPM.

Either a 540 rpm or 1000 rpm tractor Power Take-Off (PTO) is required. The RC5015 and RC6015 cutters are designed for 540 rpm and the RCM5015 and RCM6015 are designed for 1000 rpm.

IMPORTANT: Do not attempt to operate a 540 RPM driveline cutter with a 1000 RPM PTO tractor and do not operate a 1000 RPM driveline cutter with a 540 RPM PTO tractor. Many tractors provide both 540 and 1000 RPM PTO modes. Check your tractor’s manual to determine its capabilities.

Before You Start

Read and understand the operator’s manual for your cutter. An understanding of how it works will aid in the assembly and set-up of your cutter.

It is best to go through the **Pre-Assembly Checklist** before assembling the cutter. Speed up your assembly task and make the job safer by having all the needed parts and equipment readily at hand.

This cutter has been partially assembled at the factory. However, there is still some assembly required before the cutter is ready for operation.

Dealer Assembly & Preparations

Pre-Assembly Checklist

	Check	Reference
☐	Fasteners and pins that were shipped with the cutter. **NOTE:** All hardware from the factory has been installed in the location where it will be used. If a part or fastener is temporarily removed for assembly reasons, remember where it goes.Keep the parts separated.	Operator’s Manual
☐	Be sure the parts get used in the correct location. By double checking while you assemble, you will lessen the chance of using a bolt incorrectly that may be needed later.	Operator’s Manual
☐	All grease fittings are in place and lubricated.	Section 4 Page 29
☐	Safety labels are correctly located and legible. Replace if damaged.	Important Safety Information Page 1
☐	Red and amber reflectors are correctly located and visible when the cutter is in the transport position.	Important Safety Information Page 1
☐	Inflate tires to specified PSI air pressure. Tighten wheel bolts to specified torque.	Section 8 Page 38
☐	Have a minimum of 2 people at hand while assembling the cutter.	Operator’s Manual
☐	Have a fork lift or loader along with chains and safety stands that are sized for the job ready for the assembly task.	Operator’s Manual

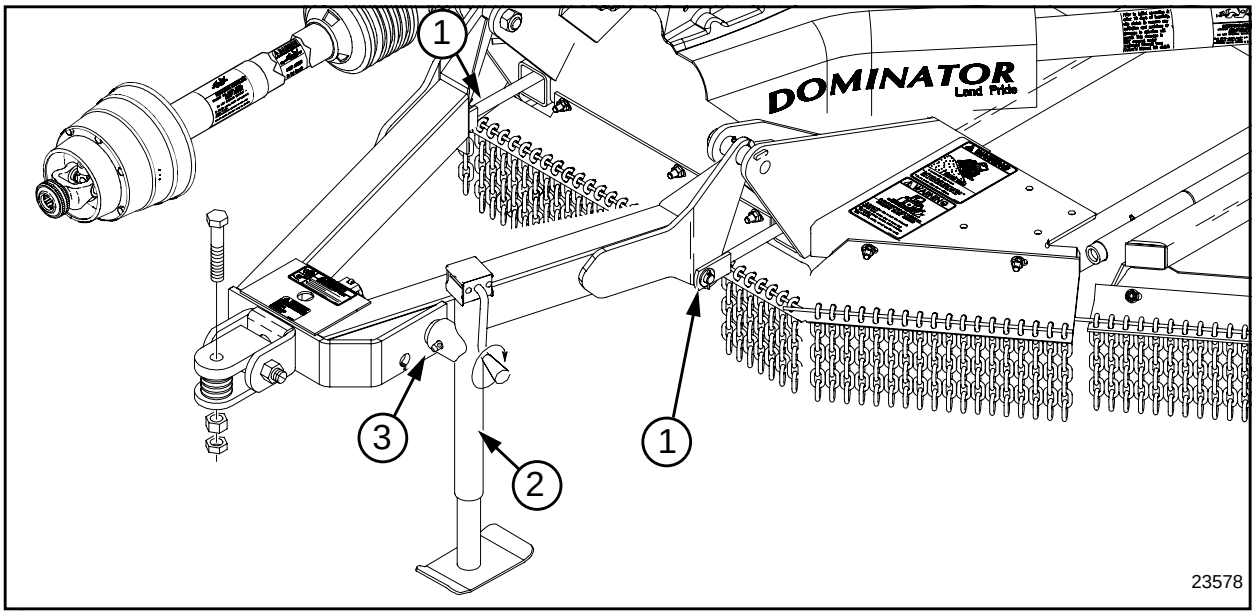

Hitch Assembly Illustration
Figure 1-2

Hitch Assembly

Refer to Figure 1-2:

NOTE: Do not tighten the hardware until assembly is complete.

1. Install left and right leveling rods (#1) to the hitch frame with 3/4" x 1 1/2" clevis pins, 3/4" flat washers, and 1/8" x 1 1/4" cotter pins. Final adjustment should be made when the cutter is attached to the tractor.
2. Install parking jack (#2) to the hitch frame and secure with attached pin (#3). Adjust parking jack to preferred drawbar height.

Wing Axle Assembly

NOTE: Do not tighten the hardware until assembly is complete.

Refer to Figure 1-3

Wing axle locknuts are tightened for shipping purposes.

1. Loosen lock nuts (#1) slightly and rotate wing axles (#2) to install turnbuckles (#3).
2. Remove cap screws and locknuts (#4). Attach turnbuckles (#3) to the wing axles with existing cap screws and lock nuts (#4).

Hydraulic Plumbing

The cutter is equipped with one hydraulic cylinder in the center for lifting the cutter and one on each wing for folding of the wings independently. All cylinders on the cutter are single action (one-way) type and should not be plumbed for two-way operation.

Each duplex outlet on your tractor can perform only one operation. One outlet is needed for lifting the cutter and a second and third for lifting the wings independently of each other.

If the tractor being used does not have the required number of duplex outlets, an optional control valve kit is available from your dealer.

Your Dealer will be able to help you determine the best configuration to match your needs and your tractor.

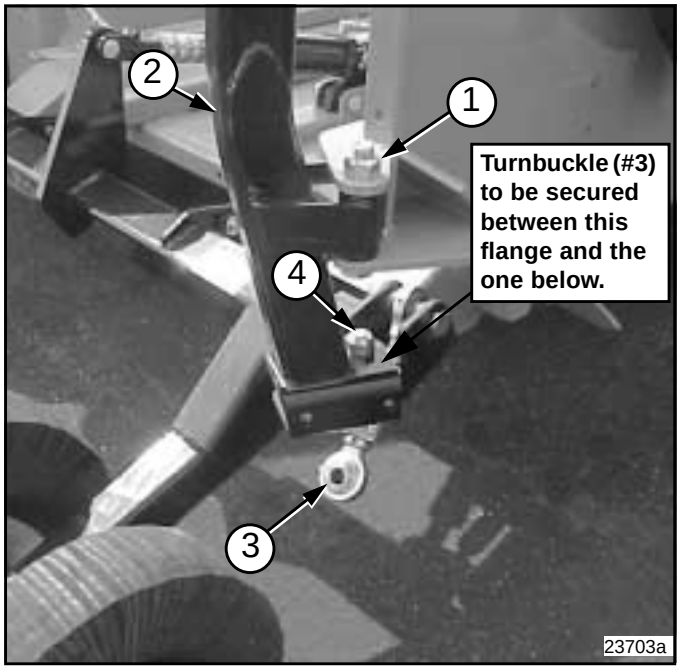

Wing Axle - Turnbuckle Assembly
Figure 1-3

Hitch Types

Refer to Figure 1-4:

The cutter will have one of two hitch types shown below.

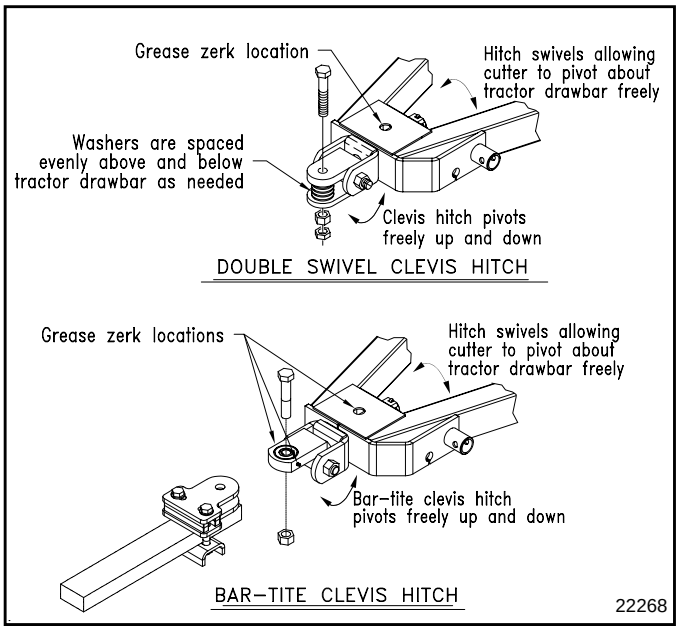

Hitch Types
Figure 1-4

Swivel Clevis Hitch

The swivel clevis hitch allows the cutter to pivot about the tractor drawbar freely in two directions. It is designed for cutting hillsides, reducing the twisting torque on the cutter hitch and tractor drawbar. Hitch swivel is greaseable.

Bar-Tite Clevis Hitch

The Bar-Tite clevis hitch functions the same as the swivel clevis hitch except it is constructed of case hardened steel and has a bushing in the tongue to extend hitch life. Bushing and hitch swivel are greaseable.

Tractor Hook-up to Swivel Clevis Hitch

⚠ DANGER!

Crushing Hazard between tractor and implement. Do not allow anyone to stand between the tractor and implement while backing-up to an implement. Never operate the hydraulic 3-point lift controls while someone is directly behind the tractor.

Refer to Figure 1-5:

IMPORTANT: Jack attachment pin (#8) must be fully inserted and secured before working on or around a cutter that is not hooked to the tractor drawbar.

1. Make certain the parking jack (#3) is properly attached to the cutter hitch and secured with attachment pin (#8).
2. Back tractor within close proximity of cutter clevis (#11).
3. Raise or lower the parking jack (#3) to align clevis (#11) with the tractor drawbar. Drawbar should fit between lower and upper plates of clevis.
4. Back tractor up to cutter hitch until holes in the drawbar and clevis (#11) are aligned.
5. Insert 1" flat washers (#9) equally above and below tractor drawbar until both spaces between drawbar and clevis plates are filled.
6. Insert 1" x 5" gr5 hex bolt (#1) through top of clevis (#11), 1" washers (#9), drawbar, remaining 1" washers (#9) and out through bottom of clevis (#11). Secure hex bolt with nut (#2). Tighten nut snugly to remove all play and then back nut one-quarter turn. Tighten jamb nut (#10) against nut (#2).
7. Lower jack stand (#3) until hitch weight is removed. Remove jack stand from hitch and store on left hand deck wing storage base or weight box. Prevent water and freeze damage by storing it so that the foot is level or lower than the head, especially when the wing is folded up.
8. Attach hitch safety chain (#4) to the tractor. Adjust chain length to remove all slack except what is necessary to permit turning. Lock chain hook securely to the safety chain.

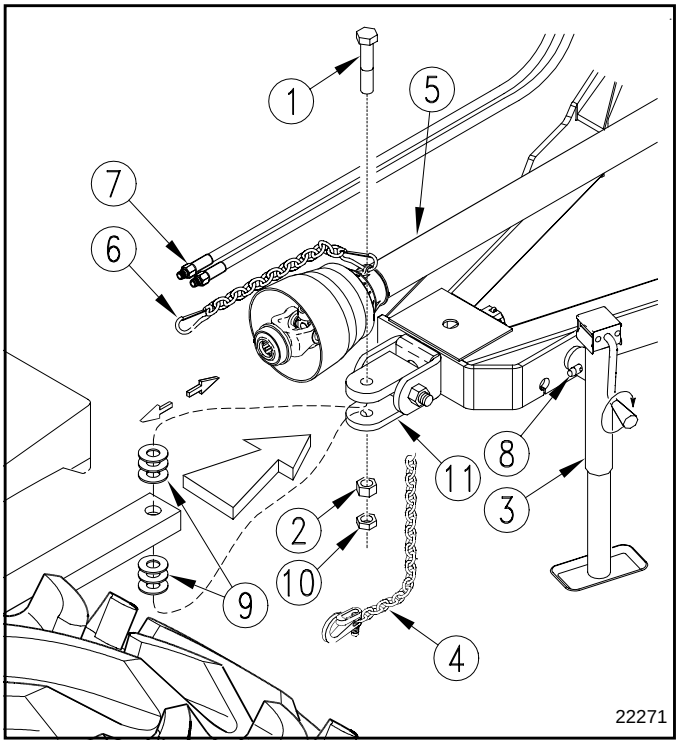

Tractor Hookup to Double Swivel Clevis Clamp Hitch
Figure 1-5

Tractor Hook-up to Bar-Tite Clevis Hitch

Refer to Figure 1-6:

1. Attach Bar-Tite clevis hitch to tractor drawbar:
   a. Insert 1" x 5" hex bolt (#7) through hitch top plate (#2), hitch weldment with bushing (#4), hitch base weldment (#5) and tractor drawbar (#13) as shown. Secure with 1" lock nut (#9). Tighten lock nut snugly to remove all play and then back nut one-quarter turn. **Do Not** torque 1" lock nut.
   b. Insert two 3/4" x 5 1/2" gr5 hex bolts (#8) through, 3/4" flat washers (#11), hitch top plate (#2), hitch base weldment (#5) and formed hitch support (#3) as shown. Secure with 3/4" lock nuts (#10).
   c. Tighten 3/4" lock nuts to the correct torque. See *Torque Values Chart* on page 38.
   d. Remove 1" x 6 1/2" gr5 hex bolt (#6) and 1" lock nut (#12) from hitch weldment (#4).

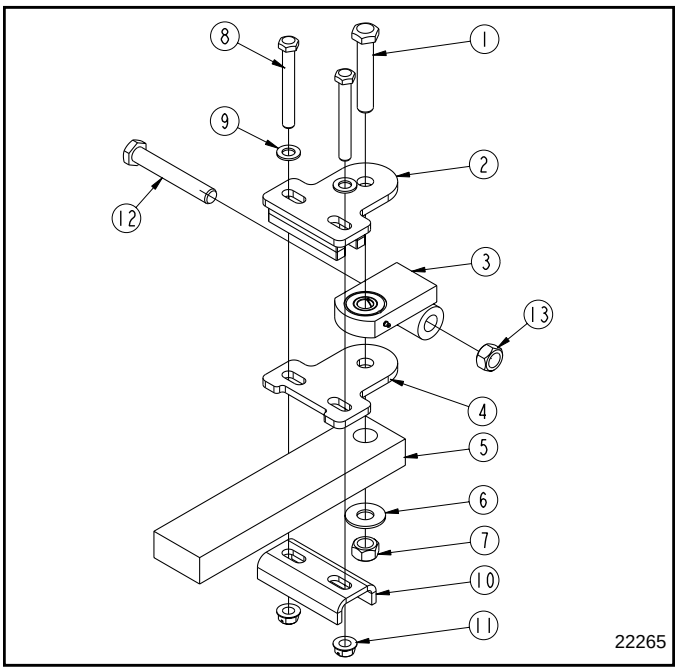

Bar-Tite Clevis Hitch Assembly to Tractor Tongue
Figure 1-6

DANGER!

Crushing Hazard between tractor and implement. Do not allow anyone to stand between the tractor and implement while backing-up to an implement. Never operate the hydraulic 3-point lift controls while someone is directly behind the tractor.

Refer to Figure 1-7:

IMPORTANT: Jack attachment pin (#8) must be fully inserted and secured before working on or around a cutter that is not hooked to the tractor drawbar.

2. Make certain the parking jack (#3) is properly attached to the cutter and secured with attachment pin (#8).
3. Back tractor within close proximity of cutter hitch.
4. Raise or lower the parking jack (#3) to align hitch (#10) with bolt hole in swivel clevis (#9).
5. Back tractor up to cutter swivel hitch (#9) until hole in hitch weldment with bushing (#10) aligns with holes in swivel clevis (#9).
6. Insert 1" x 6 1/2" gr5 hex bolt (#1) through the cutter swivel hitch (#9) and hitch weldment (#10). Secure hex bolt with lock nut (#2). Tighten lock nut snugly to remove all play. **Do Not** torque 1" lock nut.
7. Lower jack stand (#3) until hitch weight is removed. Remove jack stand from hitch and store on left hand deck wing storage base or weight box. Prevent water and freeze damage by storing it so that the foot is level or lower than the head, especially when the wing is folded up.
8. Attach hitch safety chain (#4) to the tractor. Adjust chain length to remove all slack except what is necessary to permit turning. Lock chain hook securely to the safety chain.

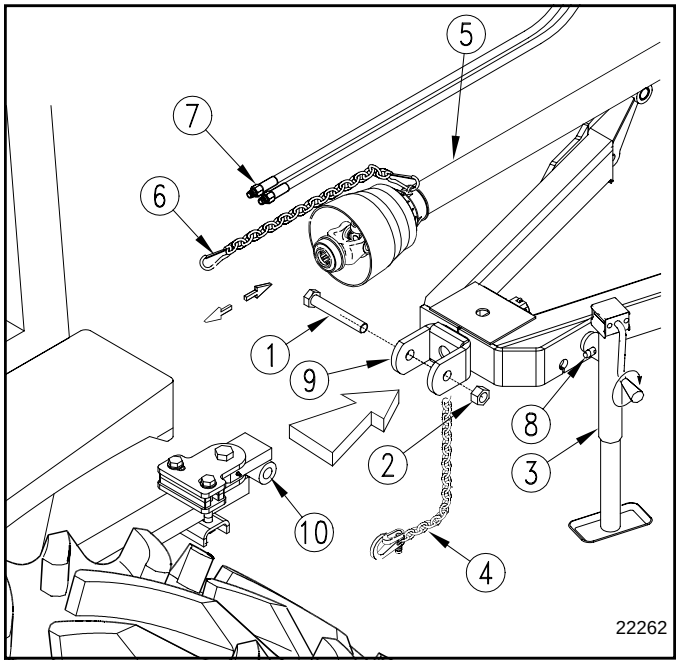

Tractor Hookup to Bar-Tite Clevis Hitch
Figure 1-7

Driveline Hook-up

CAUTION!

Tractor PTO shields and guards must be in place at all times during operation!

The cutter driveline is coupled to the tractor and implement shafts with a pull collar coupler and retaining bolt.

Always engage the PTO at low engine rpm to minimize start-up torque on the driveline. See “Section 4: Maintenance & Lubrication” on page 22 for a detailed description of maintaining the driveline.

1. The driveline shaft from the tractor may be either a constant velocity type or a conventional type. Attach the 1 3/4-20 splined end to the input shaft of the divider gearbox. Attach the opposite splined end to the tractor PTO shaft. Skip to step 3 if driveline fits between tractor and implement.

Refer to Figure 1-8:

2. The PTO driveline will require shortening if it is too long to fit between the tractor and cutter gearbox. Shorten driveline as follows:
   a. Place tractor gear selector in park, shut tractor engine off, set park brake and remove switch key.
   b. Pull driveline apart as shown in Figure 1-8 on page 15. Attach the outer yoke section to the tractor shaft and inner yoke section to the cutter gearbox shaft. Pull on each driveline section to be sure the universal joints are secured to the shafts.
   c. Hold the driveline sections parallel to each other to determine if they are too long. The inner and outer shields on each section should end approximately 1" short of reaching the universal joint shield on the adjacent section (see “**B**” dimension). If they are too long, measure 1" (“**B**” dimension) back from the universal joint shield and make a mark at this location on the inner and outer driveline shields.
   d. Cut off the shield at the mark (“**X**” dimension). Cut the same amount off the shaft (“**X1**” dimension). Repeat cut off procedure (“**Y**” & “**Y1**” dimensions) to the other driveline half.
   e. Remove all burrs and cuttings.
   f. Apply multi-purpose grease to the inside of the outer shaft and reassemble the driveline.
   g. Attach inner driveline yoke end to the cutter divider gearbox input shaft.
   h. Attach outer driveline yoke to the tractor's shaft.
3. The driveline should now be moved back and forth to insure both ends are secured to the tractor and cutter shafts. Reattach any end that is loose.

IMPORTANT: Two small chains are supplied with each driveline. These chains must be attached to the outer and inner driveline shields and to the cutter deck or hitch to restrict the shields from rotating.

4. Refer to Figure 1-7 on page 14. Secure chain (#6) on driveline (#5) around the hitch clevis rod to restrict the driveline outer shield from rotating. Re-latch safety chain to driveline guard.
5. Attach the safety chain located on the other end of the driveline (#5) to the cutter’s main frame to restrict the driveline inner shield from rotating. Re-latch safety chain to driveline guard.

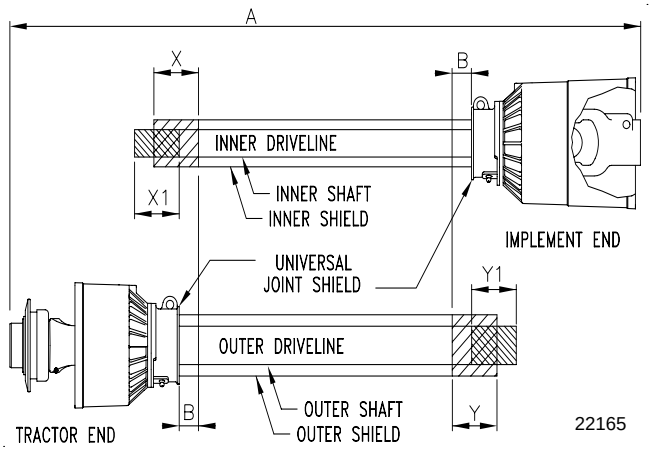

PTO Driveline Shortening
Figure 1-8

Hydraulic Hook-up

Refer to Figure 1-7 on page 14:

DANGER!

Hydraulic fluid under pressure can penetrate skin. Wear protective gloves and safety glasses or goggles when working with hydraulic systems. Use a piece of cardboard or wood rather than hands when searching for hydraulic leaks. If hydraulic fluid is injected into the skin, it must be treated by a doctor within a few hours or gangrene may result.

1. Route cylinder hoses (#7) through hose support loop and connect to tractor remote outlets.
2. Cycle the hydraulic system by raising and lowering the center deck cylinder and the wing fold cylinders. It may be necessary to purge the system of trapped air if operation is sluggish. The system may be purged as follows:
   a. With the wings lowered to the ground, loosen the hydraulic hose fitting at each wing cylinder slightly to allow fluid to escape.
   b. Slowly activate the tractor control valve to purge any trapped air from the system.
   c. Tighten each fitting.
3. The center deck lift cylinder is purged in the same manner as the wing cylinders. The lift cylinder must be fully retracted and the cutter resting on the ground before loosening the hose fitting as described in paragraph 2a above.
4. Check the driveline for adequate clearance under all ranges of cutter height. With the driveline shaft attached to the tractor, slowly raise and lower the cutter to its upper and lower limits while observing clearance between hitch and driveline outer shield. Modify the tractor drawbar height and/or length if the driveline interferes with the tractor drawbar.

Unhooking From the Cutter

1. Park cutter on a level solid hard surface. Place tractor gear selector in park and set park brake.
2. Refer to “Transporting The Cutter”, Figure 2-1 & Figure 2-2 on page 18. Raise wings up in the transport position and place transport lock bars in the locked position. Make sure transport bars are secured in place with lock pins (#2) and hair pins (#1).
3. Remove stroke control spacers from the center hydraulic cylinder and lower cutter until front skids are resting on the ground. Replace stroke control spacers as needed to support wheels at this position.
4. With tractor gear selector in park and park brake set, shut tractor engine off, and remove switch key. Move cylinder lift levers back and forth to release hydraulic line pressure.
5. Refer to “Hitch Assembly Illustration” (Figure 1-2) on page 12. Remove the parking jack (#3) from the left hand wing deck or weight box and install to cutter hitch. Secure the parking jack in place with attached jack pin (#4).
6. Adjust the parking jack as needed to remove the hitch pin.
7. Remove hitch pin and unhook hydraulic hoses from tractor. Store hose ends on cutter deck.
8. Lower the parking jack to rest cutter on its front skids.

Pre-start Checklist

Hazard control and accident prevention are dependent upon the awareness, concern, prudence and proper training involved in the operation, transport, maintenance and storage of the cutter. Before beginning to operate your cutter, the following inspections should be made.

- Read and follow the Safety Rules carefully, refer to **"Important Safety Information"** starting on page 1.
- Read all of the *Tractor Hook Up* in the **"Assembly and Set-up"** section on page 13, and all preparation instructions.
- Read the **"Operating Instructions"** section starting on page 17.
- Refer to the **"Maintenance and Lubrication"** section starting on page 22 to lubricate the cutter as required.
- Check the cutter initially and periodically for loose bolts and pins, refer to the *Torque Values Chart* in the **"Appendix"** section on page 38.
- Make sure all guards and shields are in place, refer to **"Important Safety Information"** starting on page 1.
- Gearbox Gear Lube, refer to the **"Maintenance and Lubrication"** section starting on page 31.

Cutter Set-up For Transporting

Refer to Figure 2-1 & Figure 2-2:

IMPORTANT: Always disengage the tractor's PTO before raising the cutter wings to transport position. Drivelines and gearboxes can be damaged if the wings are raised while PTO is turning.

NOTE: The wings are controlled with two hydraulic lift cylinders. Be certain that the wing hydraulics are attached to the tractor and the hydraulic hoses are full of oil before proceeding.

If the cutter wings are down, they will need to be raised before transporting on a road and/or through narrow openings.

1. **Disengage tractor PTO** and wait for the cutter blades to come to a complete stop before raising the wings.
2. Raise the cutter wings fully up with the hydraulics.
3. Place tractor gear selector in park, shut tractor engine off, set park brake, remove switch key and dismount from tractor.
4. See Figure 2-2. Remove hairpin clip (#1) from storage pin (#2).
5. Rotate end of transport lock bar (#3) to cylinder pin (#4) as shown in Figure 2-1. Secure with hairpin clip (#1).
6. Repeat steps 3 and 4 for the other wing section. Cutter is now ready for transporting.

Transport Bar, Locked Position
Figure 2-1

Transport Bar, Storage Position
Figure 2-2

Transporting The Cutter

CAUTION!

When traveling on public roads at night or during the day, use accessory lights and devices for adequate warning to operators of other vehicles. Comply with all federal, state and local laws.

1. Be sure to reduce tractor ground speed when turning and leave enough clearance so the cutter does not contact obstacles such as buildings, trees or fences.
2. Select a safe ground speed when transporting from one area to another. When traveling on roadways, transport in such a way that faster moving vehicles may pass you safely.
3. When traveling over rough or hilly terrain, shift tractor to a lower gear.

Cutter Set-up For Field Operation

WARNING!

The following operational procedures should be carried out by the tractor operator. Other persons should be cleared of the area even during cutter set-up. Cutter operation should be stopped when in the vicinity of other persons.

Refer to Figure 2-3:

1. Inspect the wing blade carriers and cutting blades prior to lowering the wings. The cutting blades may become locked together (overlapped) when the wings are raised to transport position. Operating the cutter under such circumstances will result in severe deck vibration. Inspect the wing decks for a locked blade condition prior to power-on operation. Use a pry bar or other tool to separate the blades when necessary.

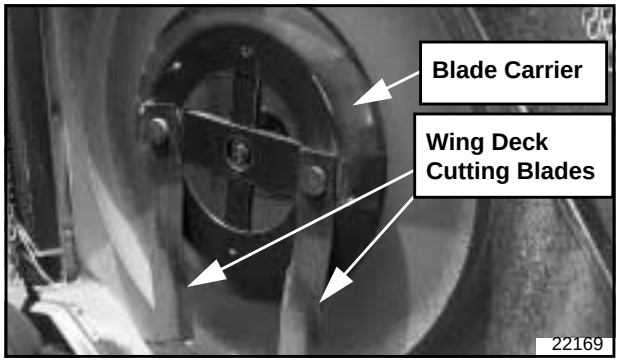

Wing Deck Blade Positioning
Figure 2-3

NOTE: The cutter height is controlled with a hydraulic lift cylinder.

Refer to Figure 2-1 & Figure 2-2 on page 17:

2. Fully raise the wings to release any tension on the transport lock bar as shown in Figure 2-1. Remove hairpin clip (#1) from both the left and right cylinder pins (#4).
3. Rotate end of transport lock bar (#3) to the storage pin (#2) as shown in Figure 2-2. Secure with hairpin clips (#1).
4. Lower wing sections to the down position.
5. Increase throttle to approximately 500 rpm and slowly engage the driveline.
6. Ensure that all power shafts are rotating and that the cutter has no vibration.
7. Continue to increase throttle to full 540 or 1000 PTO speed before commencing forward operation.

Operating Speed & Turning Angle

Refer to Figure 2-4 & Figure 2-5:

Optimum ground speed depends on the density of the material being cut, the horsepower rating of the tractor, and (in some cases) terrain. Always operate the tractor at the cutter's full rated PTO speed in a gear range that allows the cutter to make a smooth cut without lugging the tractor down, usually between 2 to 5 mph.

Avoid tractor-to-cutter turning angles exceeding 35 degrees (Figure 2-4) if the main driveline is a standard conventional shaft. Turning angle may be increased to 80 degrees (Figure 2-5) if the cutter is equipped with a constant velocity driveline shaft. These extreme angles are intended for intermittent usage only and not prolonged usage. Plan your field cutting to minimize the number of turns as well as extreme turning angles.

WARNING!

Do not operate this cutter under any terrain conditions where, on a continuous cut, the wing angle exceeds 45 degrees up. Ensure that the wing wheels are in continuous ground contact at all times. Use the float position of your tractor's hydraulic system to provide automatic wing float position for varying terrain conditions.

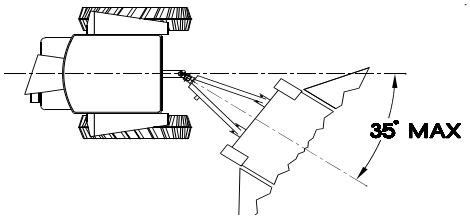

Conventional U-Joint Driveline
Figure 2-4

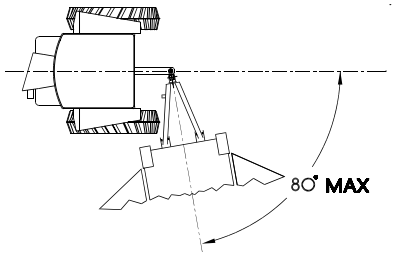

Constant Velocity (CV) Driveline
Figure 2-5

Optional Manual Wing Lift (Winch)

Refer to Figure 2-6:

An optional manual wing lift kit is available for the RCB6010 and RCB6015 cutters in case of hydraulic failure. Pull the hook/cable out and attach it by routing the cable around the cylinder pin, between the transport bar and cylinder clevis and clipping the hook back to the cable as shown.

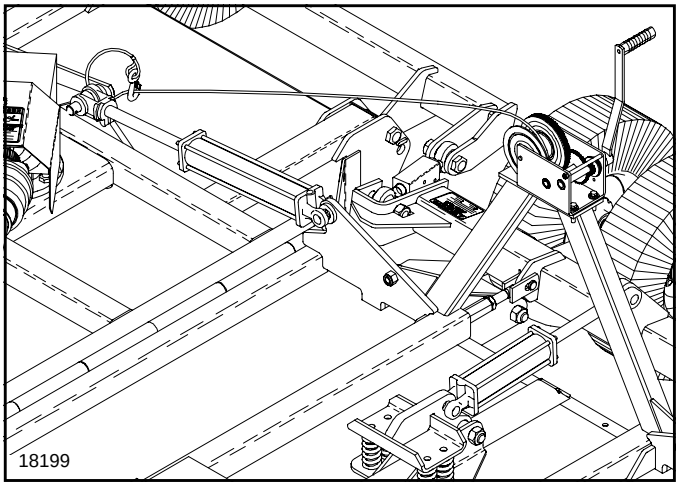

Manual Wing Lift (Winch)
Figure 2-6

General Operating Instructions

CAUTION!

To prevent personal injury caused by thrown objects, the use of front & rear safety guards is strongly recommended! To avoid injury or death from entanglement in rotating drivelines, the drive gearbox shields must be in place and secure when operating.

DANGER!

Rotary cutters have the ability to discharge objects at high speeds; therefore, the use of front & rear safety guards is strongly recommended when cutting along highways or in an area where people may be present.

CAUTION!

Damage may occur if exceeding the rated cutting capacity of the cutter!

CAUTION!

Do not over speed PTO or machine damage may result. RC series are designed for a tractor with 540 RPM rear PTO and RCM series are designed for a tractor with 1000 RPM rear PTO.

DANGER!

Do not lift deck to use cutting blades as a fan. Cutting blades are not properly designed or guarded for this use. Using the deck as a fan can result in injury and/or death.

DANGER!

Do not operate 15 ft. cutters without both wings attached to the center deck. Removing one wing will expose blades and increase risk of cutter overturning. Removing both wings will expose blades on both sides. Exposed blades can result in serious injury and/or death.

It is important that you familiarize yourself with the Operator's Manual, completed the Operators Checklist, properly attached the cutter to your tractor, made leveling adjustments, and preset your cutting height before beginning a running operational safety check on your Land Pride RC(M)5015 and RC(M)6015 Series Rotary Cutters.

It's now time to do a running operational safety check. It is important that at any time during this safety check you detect a malfunction in either the cutter or tractor that you immediately shut the tractor off, remove the key, and make necessary repairs and/or adjustments before continuing on.

Make sure before starting the tractor that the park brake is engaged, the PTO is disengaged, and the cutter is resting on the ground with both wings down. Start the tractor and set the engine throttle speed at a low idle. Raise the cutter with the tractor's rear hydraulic lift control lever to transport position making sure that the PTO shaft does not bind and does not contact the cutter frame. Lower the cutter to the ground and at a low engine speed engage the PTO. If everything is running smoothly at a low idle, slowly raise the cutter to transport height checking for bind or chatter in the driveline. Lower the cutter to the ground and increase the tractor's engine rpm until it reaches the cutter's full PTO operating speed which will be either 540 or 1000rpm. If everything is still running smoothly, once more raise the cutter to transport height to check for driveline bind or chatter. Lower the cutter to the ground, return the engine to a low idle, and disengage the PTO. Position the adjustable stops on the tractor's hydraulic lift lever so the cutter can be consistently returned to the same cutting and transport height. Make a tight turn to ensure that the rear tractor tires are not coming into contact with the deck.

You should now be ready to transport to your cutting site at a safe ground speed. On roadways, transport in such a manner that faster moving vehicles can easily see you and pass you safely. Reduce your speed when traveling over rough and hilly terrain. Avoid quick or sharp steering corrections. Take extra care to insure that the mower doesn't come into contact with obstacles such as trees, buildings or fences. Use accessory lights and

appropriate reflective devices to provide adequate warning to pedestrians and other vehicle operators when traveling on public roads and in the dark of night. Comply with all local, state and federal laws.

It is important that you inspect the area where you will be cutting and clear it of safety hazards and foreign objects either before or after you arrive at the cutting site. Never assume the area is clear. Cut only in areas you are familiar with and are free of debris and unseen objects. Extremely tall grass should be cut twice to detect potential hazards. In the event you do strike an object stop the cutter and tractor immediately to inspect and make necessary repairs to the cutter before resuming operation. It really pays to inspect a new area and to develop a safe plan before cutting.

You will need to maintain either 540 or 1000 rpm PTO speed and 2 to 5 mph ground speed to produce a clean cut. Make a tractor gear and range selection that will enable you to maintain these speed combinations. Generally the quality of cut is better at lower ground speeds. Dense ground cover will create the need to slow down even more. In certain conditions tractor tires will roll grass down resulting in an uneven cut when the grass fails to rebound. Should this happen you may try reversing the direction of cut and/or double cut to achieve the desired finish. Avoid very low cutting heights especially on extremely uneven terrain. Always cut downward on slopes and avoid crossing the face of steep slopes. Avoid sharp drops and cross diagonally through dips to prevent hanging up the tractor and cutter. Slow down in turns and avoid sharp turns if at all possible. Remember to look back often.

Now that you're prepared and well briefed you may begin cutting. Begin cutting by doing the following:

- Reducing the tractor's engine rpm.
- Make sure the wings are on the ground and the cutter is in cutting position.
- Engage the PTO.
- Raise the engine rpm to the appropriate PTO speed.
- Begin cutting.

Make wide turns when possible. Operators of pull-type models must plan ahead and choose a cutting pattern that allows for wider turns. Try increasing or decreasing ground speed to determine the effect on quality of cut. With a little practice you will be pleased with what you and your Land Pride Rotary Cutter can do.

Whether you are done mowing, need to take a break, or just need to make a few adjustments to the cutter, remember to always do the following:

- Reduce the tractor's engine rpm.
- Disengage the PTO.
- Stop on level ground.
- Set the park brake.
- Turn off the engine and remove the key.
- Stay on the tractor until the cutter blades have come to a complete stop.

Center and Wing Section Leveling

These adjustments should be made with the cutter hooked up to the same tractor that will be used for field operations or one having the same drawbar height. Cutter adjusting rods are set at the factory prior to shipment. The adjusting rods control the draw bar height at the hitch clevis.

Refer to Figure 3-1, Figure 3-2 & Figure 3-3:

1. Attach the cutter to the tractor and position it on level ground.
2. Raise both wings to locked position.
3. See Figure 3-1. Using the hydraulic lift, adjust the height of the center deck to 2-3 inch clearance between the front skids (#2) and ground surface.

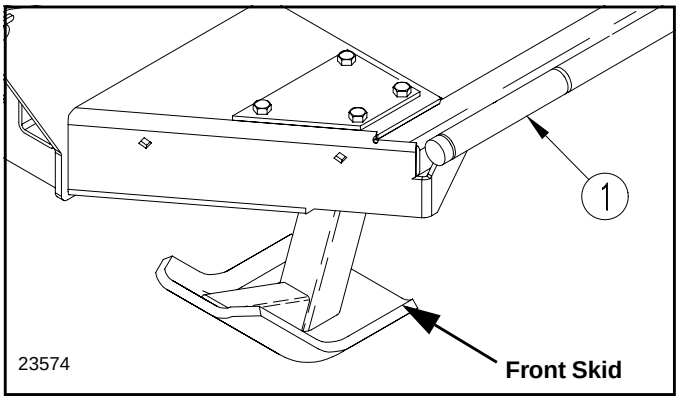

Front Skid Position
Figure 3-1

4. See Figure 3-1. Level the left side of the center section from front to rear using measurements from ground line to center of left hand hinge rod (#1). (See Figure 3-2) Loosen jam nut (#2) and rotate the left hand leveling rod adjusting nut (#3) until the center section is level. Re-tighten jam nut (#2).
5. Repeat steps 3 and 4 for the right hand leveling rod. Be sure that both left and right leveling rods are equally tight.

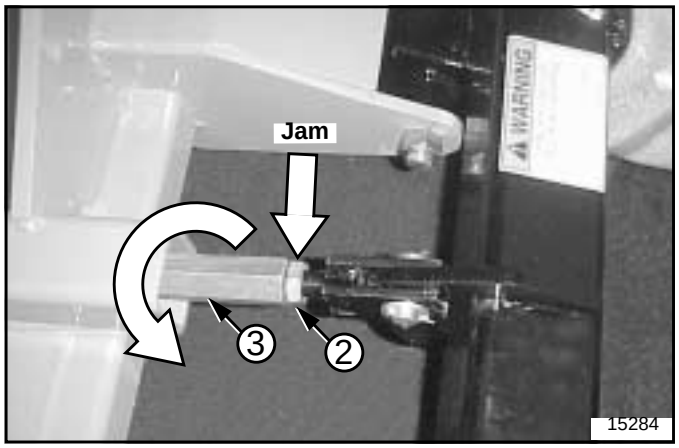

Center Section Leveling Rod
Figure 3-2

6. See Figure 3-3. Lower wings to ground position. Wing sections may need adjusting now that the center section is level. Loosen jam nut (#4) and rotate the adjusting turnbuckle (#5) to desired position. Re-tighten jam nut (#4).

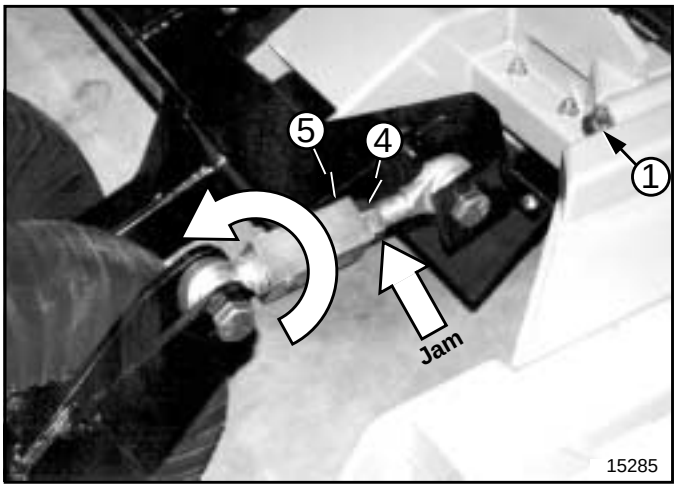

Wing Leveling Turnbuckle
Figure 3-3

Cutting Height Adjustment

Refer to Figure 3-4:

The cutter comes standard with hydraulic height control. Stroke control spacers are supplied to accommodate various cutting heights.

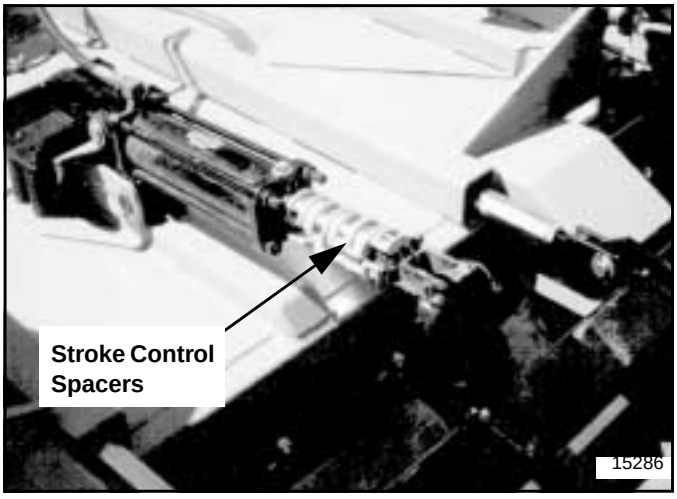

Hydraulic Cylinder With Stroke Control Spacers
Figure 3-4

General Maintenance Information

Proper servicing and adjustment is the key to the long life of any implement. With careful and systematic inspection, you can avoid costly maintenance, time and repair.

Check all bolts after using the unit for several hours to be sure they are tight.

Replace any worn, damaged or illegible safety labels by obtaining new labels from your Land Pride Dealer.

Cutter Blade Maintenance

DANGER!

Always disconnect main driveline from tractor PTO before servicing the underside of the cutter deck. Cutter can be engaged if tractor is started resulting in damage to the cutter, bodily injury and/or death.

WARNING!

Always secure cutter deck in the up position with solid supports before servicing the underside of the cutter. Never work under equipment supported by hydraulics. Hydraulics can drop equipment if controls are actuated or if hydraulic lines burst. Either situation can drop the cutter instantly even when power to the hydraulics is shut off.

IMPORTANT: Replacement blades should be ordered in pairs. Order only genuine Land Pride blades. Other blades may not meet specifications.

Always inspect cutting blades before each use. Make certain they are properly installed and are in good working condition. Replace any blade that is damaged, worn, bent, or excessively nicked. Small nicks can be ground out when sharpening.

Remove cutting blades and sharpen or replace as follows:

1. Place tractor gear selector in park and/or set brakes, shut engine off and remove ignition key.
2. Disconnect main driveline from tractor PTO and secure cutter deck in the up position with solid supports before servicing underside of cutter.
3. Align blade bolt with access hole in deck.
4. See Figure 4-2 on page 23. Unscrew locknut (#6) to remove cutting blade (#3). Blade bolt (#1) is keyed and will not turn freely.
5. Both blades should be sharpened at the same angle as the original cutting edge and must be replaced or re-ground at the same time to maintain proper balance in the cutting unit. The following precautions should be taken when sharpening blades:
   a. Do not remove more material than necessary.
   b. Do not heat and pound out a cutting edge.
   c. Do not grind blades to a razor edge. Leave a blunt cutting edge approximately 1/16” thick.
   d. Always grind cutting edge so end of blade remains square to cutting edge and not rounded.
   e. Do not sharpen back side of blade.
   f. Both blades should weigh the same with not more than 1 1/2 oz. difference. Unbalanced blades will cause excessive vibration which can damage gearbox bearings and create structural cracks.

Refer to Figure 4-1:

6. Carefully check cutting edges of blades in relation to blade carrier rotation to ensure correct blade placement. Cutter blades must be installed with cutting edge leading in rotation**.**

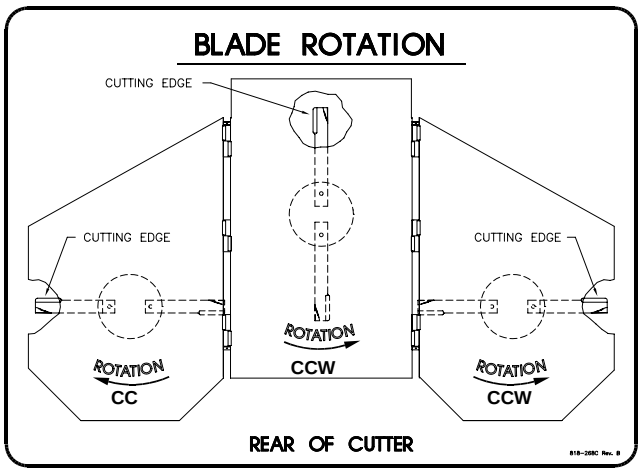

Blade Rotation
Figure 4-1

Refer to Figure 4-2 on page 23:

IMPORTANT: Shim (#2) below may or may not be required. If blade deflection is less than 3/4" without a shim, then the shim is not used. However, a shim is required if blade deflection is greater than 3/4".

IMPORTANT: Locknuts can loose their ability to lock properly once removed. Therefore, always use a used blade nut or plain nut in steps 7 & 8 below and then **replace used nut with new locknut in step 9.**

7. Start by assembling blades without shim (#2). Insert blade bolt (#1) through blade (#3), dish pan (#4) and flat washer (#5). Temporarily secure blade with a used 1 1/8"-12 nut. **Draw nut up snug. Do not tighten.**
8. Check blade deflection. If deflection is greater than 3/4", remove blade bolt and reassemble as before except include shim (#2) when reassembling. Select shim thickness based on deflection. The greater the deflection, the thicker the shim.
9. Once blade deflection is correct, **replace used nut with new locknut (#6)** and torque to 450 ft. lbs.

10. If replacing dishpan (#4), nut on gearbox output shaft should be torqued to 550 ft-lbs. minimum and secured with a cotter pin installed through the nut and bolt and both legs bent opposite directions around the nut.

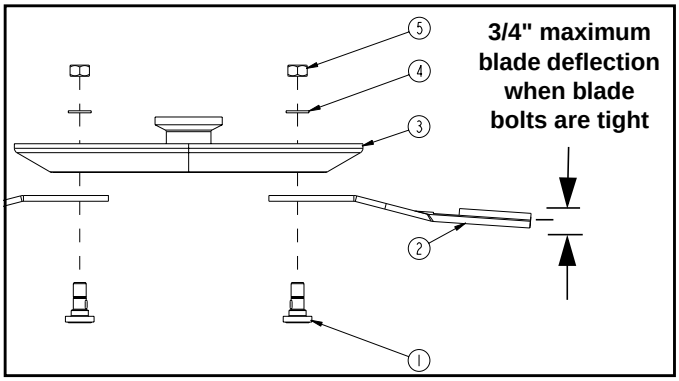

Cutter Blade Assembly
Figure 4-2

Land Pride Cutter Blade Parts

Item	Part No.	Part Description
	318-586A	BLADE BOLT KIT (Item No's 1, 2, 5 & 6)
1	802-277C	BLADE BOLT 1 1/8-12 x 3 7/16 WITH KEY
2	312-075D	BLADE SPACER 16 GA. (.06")
2	312-082D	BLADE SPACER 18 GA. (.062")
2	312-089D	BLADE SPACER 20 GA. (.036")
2	312-808D	BLADE SPACER 24 GA. (.024")
3	820-168C	CUTTER BLADE 1/2 x 4 x 29 CCW (CTR)
3	820-169C	CUTTER BLADE 1/2 x 4 x 23 CCW (RH)
3	820-170C	CUTTER BLADE 1/2 x 4 x 23 CW (LH)
4	318-190D	WELDMENT DISHPAN
5	804-147C	WASHER FLAT 1 HARD ASTMF436
6	803-170C	NUT HEX TOP LOCK 1 1/8-12 PLATE

Drivelines With Slip Clutches

CAUTION!

Engage parking brake, disengage PTO, shut off tractor, and remove key before working on or around the driveline and/or slip clutch.

CAUTION!

Slip clutches that have been in use or have been slipped for only two or three seconds during run-in may be too hot to touch. Allow a hot clutch to cool before working on it.

Cutter drive components are protected from shock loads by a friction slip clutch. The clutch must be capable of slippage during operation to protect the gearbox, driveline and other drive train parts.

Friction clutches should be "run-in" prior to initial operation and after long periods of inactivity to remove any oxidation that may have accumulated on the friction surfaces. Repeat "run-in" instructions at the beginning of each season and when moisture and/or condensation seizes the inner friction plates.

Refer to Figure 5-2 to determine which friction clutch your cutter has. Follow "run-in" instructions on the following pages for your specific clutch type.

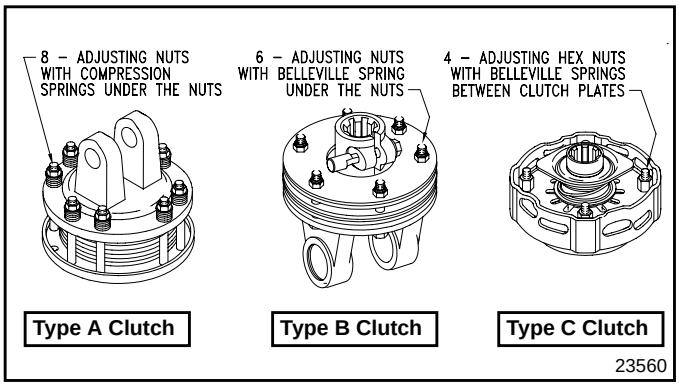

Clutch Types
Figure 5-2

Type A Clutches

Clutch Run-In

Refer to Figure 5-3:

1. Using a pencil or other marker, scribe a line across the exposed edges of the clutch plates and friction disks.

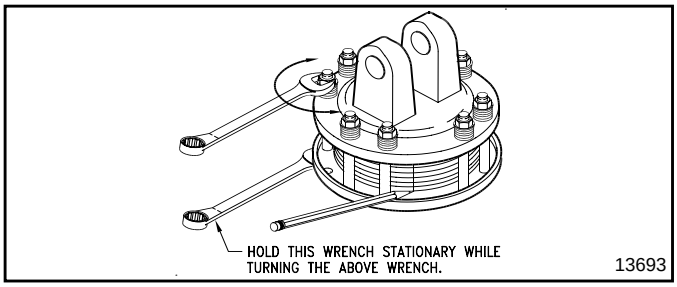

Type A Clutch Run-In
Figure 5-3

2. Carefully loosen each of the 8 spring retainer nuts by exactly 2 revolutions. It will be necessary to hold hex end of retainer bolt in order to count the exact number of revolutions.
3. Make sure the area is clear of all bystanders and machine is safe to operate.
4. Start tractor and engage PTO drive for 2-3 seconds to permit slippage of the clutch surfaces. Disengage PTO, then re-engage a second time for 2-3 seconds. Disengage PTO, shut off tractor and remove key. Wait for all components to stop before dismounting from tractor.
5. Inspect clutch and ensure that the scribed markings made on the clutch plates have changed position. Slippage has not occurred if any two marks on the friction disk and plate are still aligned. A clutch that has not slipped must be disassembled to separate the friction disk plates. See "Clutch Disassembly, Inspection & Assembly" below.

6. Tighten each of the 8 spring retainer nuts on the clutch housing exactly 2 revolutions to restore clutch to original setting pressure.
7. Allow clutch to cool to ambient temperature before operating again. Clutch is now ready for use.
8. The clutch should be checked during the first hour of cutting and periodically each week. An additional set of scribe marks can be added to check for slippage. See Figure 5-5 to adjust spring length.

Clutch Disassembly, Inspection & Assembly

Refer to Figure 5-4:

If clutch run-in procedure above indicated that one or more friction disks did not slip, then the clutch must be disassembled to separate the friction disks.

Disassembly

IMPORTANT: Not all Type A clutch components are arranged as illustrated in Figure 5-4. Also some have more components than others. Be sure to keep track of order and orientation of your clutch components during disassembly.

Disassembly of clutch is simply a matter of first removing spring retainer nuts (#1), springs (#2) and bolts (#3) from the assembly. Each friction disk (#4) must then be separated from the metal surface adjacent to it.

Inspection

Inspect all parts for excessive wear and condition. Clean all parts that do not require replacement.The original friction disk thickness is 1/8" (3.2mm) and should be replaced if thickness falls below 3/64" (1.1mm). If clutches have been slipped to the point of “smoking”, the friction disks may be damaged and should be replaced. Heat build-up may also affect the yoke joints.

Assembly

Reassemble each friction disk (#4) next to the metal plate it was separated from. Install bolts (#3) through the end plates and intermediate plates as shown. Place springs (#2) over the bolts and secure with nuts (#1).

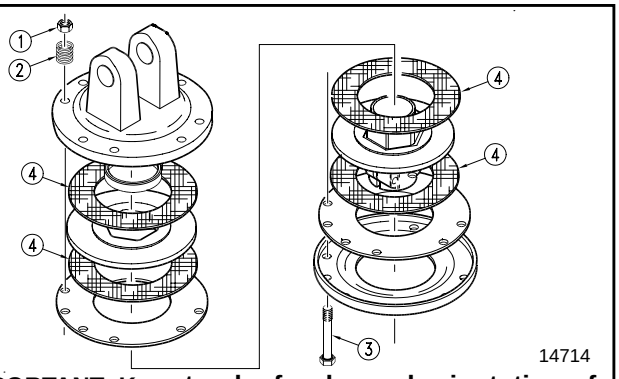

IMPORTANT: Keep track of order and orientation of your clutch components during disassembly

Type A Clutch Disassembly
Figure 5-4

Refer to Figure 5-5 & Table Below:

Progressively tighten each spring retainer bolt until correct spring height “A” is reached.

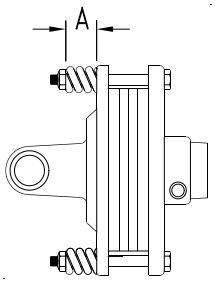

Type A Clutch Adjustment
Figure 5-5

Driveline No.	Driveline Location	PTO Speed	Cat No.	A (inches) Spring Height
826-183C	Center	540	4	1.15" (S/N 566919+) 1.12" (S/N 566918-)
826-184C	Center	1000	4	1.09" (S/N 566919+) 1.02" (S/N 566918-)
826-478C	Center	540/1000	5	1.32"
826-185C	Wing	540/1000	4	1.175" (S/N 566919+) 1.14" (S/N 566918-)
826-481C	Wing	540/1000	5	1.32"

Type B Clutches

Clutch Run-In

Refer to Figure 5-8:

1. Using a pencil or other marker, scribe a line across the exposed edges of the clutch plates and friction disks.
2. Carefully loosen each of the 6 nuts by exactly 1 revolution. It will be necessary to hold hex end of retainer bolt in order to **count the exact number of revolutions**.

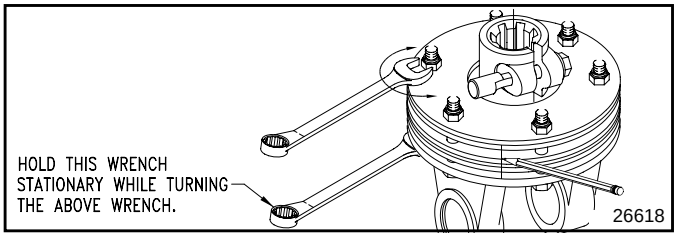

Type B Clutch Run-In
Figure 5-8

3. Make sure the area is clear of all bystanders and machine is safe to operate.
4. Start tractor and engage PTO drive at idle for 2-3 seconds to permit slippage of friction plates. Disengage PTO, shut off tractor, and remove key. Wait for all components to come to a complete stop before dismounting from tractor.
5. Inspect clutch to ensure that the scribed markings made on the clutch plates and friction disc have changed positions. If any two marks are still aligned, then the clutch did not slip as it should. Skip to step 8 if all clutch plates slipped.
6. If the friction clutch did not slip, loosen the nuts one more revolution. Make sure the nuts have full thread engagement on the bolt and then repeat steps 4 - 5.
7. A clutch that does not slip must be disassembled to separate the friction disk plates. See **"Clutch Disassembly, Inspection & Assembly"** below.
8. Tighten each of the nuts on the clutch back to their original location to restore clutch pressure.
9. Allow clutch to cool to ambient temperature before operating again. Clutch is now ready for use.
10. The clutch should be checked during the first hour of cutting and periodically each week. An additional set of scribe marks can be added to check for slippage.

Clutch Disassembly, Inspection & Assembly

Refer to Figure 5-9:

The clutch must be disassembled into its separate friction disks if clutch run-in procedure indicated that one or more friction disks did not slip. See disassembly instructions.

Disassembly

IMPORTANT: Do not remove nuts (#8) from bolts (#7) until after Belleville spring (#6) is relaxed and not pressing against any of the six nuts (#8).

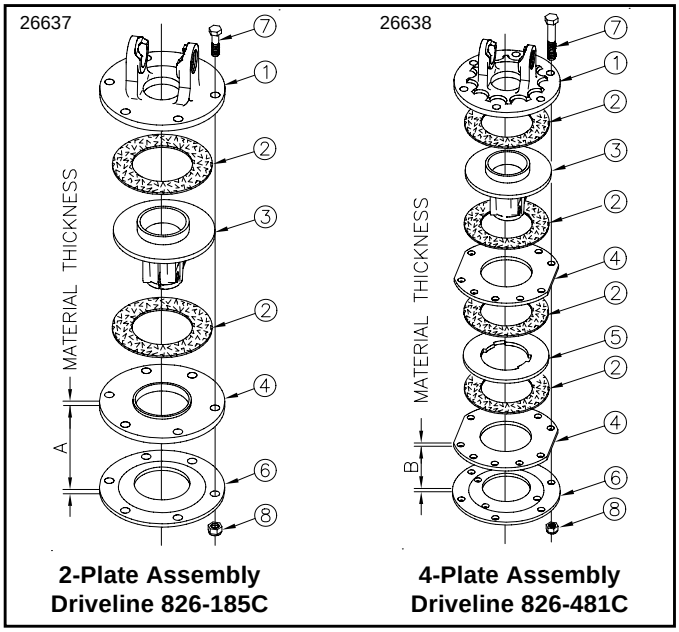

Type B Clutch Assembly
Figure 5-9

1. Unscrew nuts (#8) equal amounts until all belleville spring tension is removed. Do not remove nuts until tension against all nuts has been removed.
2. Remove nuts (#8) and bolts (#7).
3. Separate all friction disks (#2) from plates (#4 & #5), hub (#3) and yoke flange (#1).

Inspection

Inspect all parts for excessive wear and condition. Clean all parts that do not require replacement.The original friction disk thickness is 1/8" (3.2mm) and should be replaced if thickness falls below 3/64" (1.1mm). If clutches have been slipped to the point of "smoking", the friction disks may be damaged and should be replaced. Heat build-up may also affect the yoke joints.

Assembly

1. Reassemble each friction disk (#2) next to the metal plate it was separated from.
2. Install bolts (#7) through end plates and intermediate plates as shown and secure with nuts (#8).

IMPORTANT: Measurement "A" & "B" are an approximate. Variations in spring force and friction materials may cause some differences in torque values. Tightening nuts (#8) one revolution will compress 2-plate clutch 1.5mm (.059") and 4-plate clutch 1.75mm (.069").

3. Tighten belleville spring (#6) until spring is tight against driveplate (#4) & then back nuts (#8) up the following number of revolutions (1 revolution = 360°):
   - 2-Plate: 3 revolutions, "A" = 4.5 mm (0.177").
   - 4-Plate: 3 1/6 revolutions, "B" = 5.5 mm (0.217"). If a higher torque is needed, then tighten nuts 1/6 of a turn, Do not set gap "B" smaller than 5 mm.

Type C Clutches

Clutch Run-In

Refer to Figure 5-8 (View - A):

1. Using a pencil or other marker, scribe a line across the exposed edges of the clutch plates and friction disks.
2. Tighten all 4 nuts uniformly until spring load is low enough that the clutch slips freely with PTO engaged.

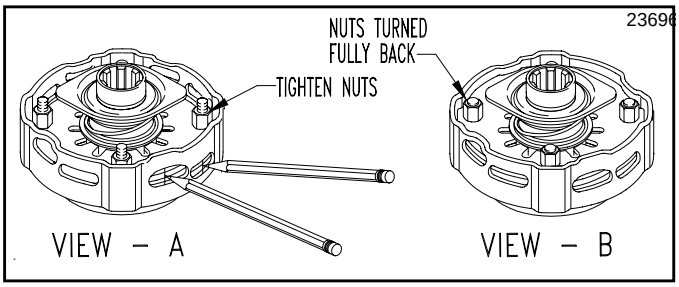

Type C Clutch Run-In
Figure 5-8

3. Make sure the area is clear of all bystanders and machine is safe to operate.
4. Start tractor and engage PTO for 2-3 seconds to permit slippage of clutch surfaces. Disengage PTO, then re-engage a second time for 2-3 seconds. Disengage PTO, shut off tractor and remove key. Wait for all components to stop before dismounting from tractor.
5. Inspect clutch and ensure that the scribed markings made on the clutch plates have changed position. Slippage has not occurred if any two marks on the friction disk and plate are still aligned. A clutch that has not slipped must be disassembled to separate the friction disk plates. See “Clutch Disassembly, Inspection & Assembly” below.

Refer to Figure 5-8 (View - B):

6. If no two marks on the friction disk and plate are still aligned, Turn all 4 nuts fully back.
7. Allow clutch to cool to ambient temperature before operating again. Clutch is now ready for use.
8. The clutch should be checked during the first hour of cutting and periodically each week. An additional set of scribe marks can be added to check for slippage.

Clutch Disassembly, Inspection & Assembly

If clutch run-in procedure above indicated that one or more of the friction disks did not slip, then the clutch must be disassembled to separate the friction disks.

IMPORTANT: Before proceeding, secure the clutch firmly in a vise or other clamping device to prevent injury.

4-Plate Disassembly

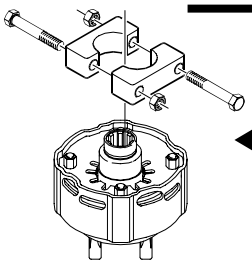

◀ Step 1

If included, remove end half clamps.

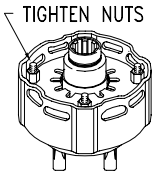

◀ Step 2

Tighten the four hex nuts uniformly until the clutch pack and hub are loose.

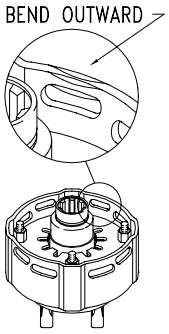

◀ Step 3

Bend all four retaining lugs out on edge of clutch housing.

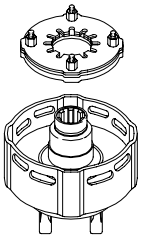

◀ Step 4

Remove thrust plate with Belleville Springs and lug rings to access friction discs and hub for inspection or service.

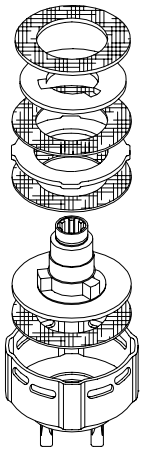

◀ Step 5

Inspect friction discs and hub.

23553

4-Plate Assembly

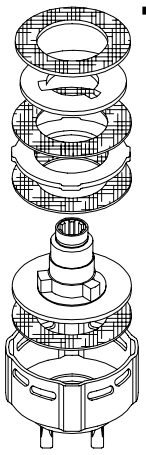

◀ Step 1

Place hub and friction discs into the housing.

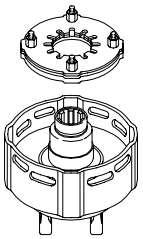

◀ Step 2

Compress Belleville Springs to the pressure plate by tightening the four hex nuts and then placing the assembly into the clutch housing.

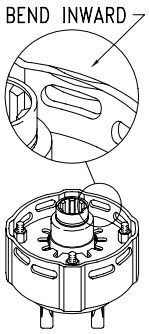

◀ Step 3

Bend retaining lugs inward over the Belleville Spring edges to secure the spring before backing the four hex nuts off.

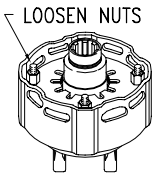

◀ Step 4

With lugs bent in, loosen the four hex nuts completely to the end of the threaded studs.

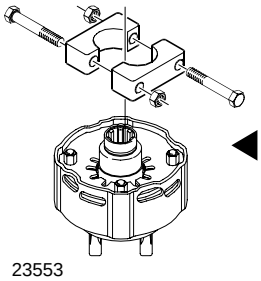

23553

◀ Step 5

Install end half clamps if available.

Skid Shoe Maintenance

⚠ WARNING!

Excessive wear on skid shoes may cause inadequate operation of cutter and create a safety hazard!

There are two skid shoes mounted on either side of the center section and one skid shoe mounted on each wing section. Check all skid shoes for wear and replace if necessary. Order only genuine Land Pride parts from your local Land Pride Dealer.

Land Pride Skid Shoe Replacement Parts

Part No.	Part Description
318-145H	CENTER SKID SHOE (RH)
318-146H	CENTER SKID SHOE (LH)
318-335D	WING SKID SHOE (S/N292792+)
318-096D	WEIGHT BOX SKID SHOE
802-466C	PLOW BOLT, 3/8" - 16 x 1 1/1/4" grade 5

Center Skid Shoe

Refer to Figure 4-7:

Replace center skid shoes as follows:

1. Remove 1/2"-13 hex whiz nuts (#2), 1/2" -13 x 2” gr8 hex bolts (#3) and center skid shoe (#1) as shown.
2. Attach new skid shoe (#1) to cutter with existing 1/2” hex bolts (#3), existing top plate (#4) and secure with existing 1/2" hex whiz nuts. Torque to 105 ft. lbs.
3. Repeat on opposite side of center section.

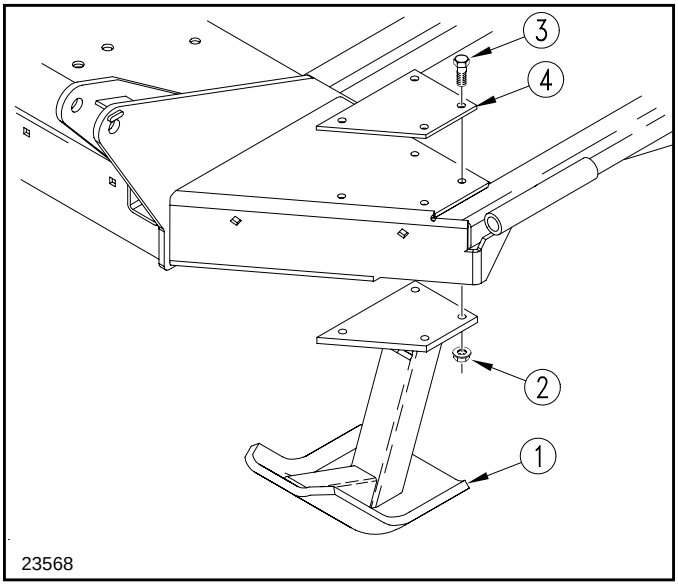

Center Skid Shoe
Figure 4-7

Wing Skid Shoe

Refer to Figure 4-8:

Replace wing skid shoes as follows:

1. Remove 3/8" hex whiz nuts (#3), 3/8" plow bolts (#2) and wing skid shoe (#1) as shown.
2. Plow bolts (#2) should be checked for wear and replaced if necessary.
3. Attach new skid shoe (#1) to cutter with existing 3/8” plow bolts (#2) and secure with 3/8" hex whiz nuts. Torque to 31 ft. lbs.
4. Repeat on opposite wing section.

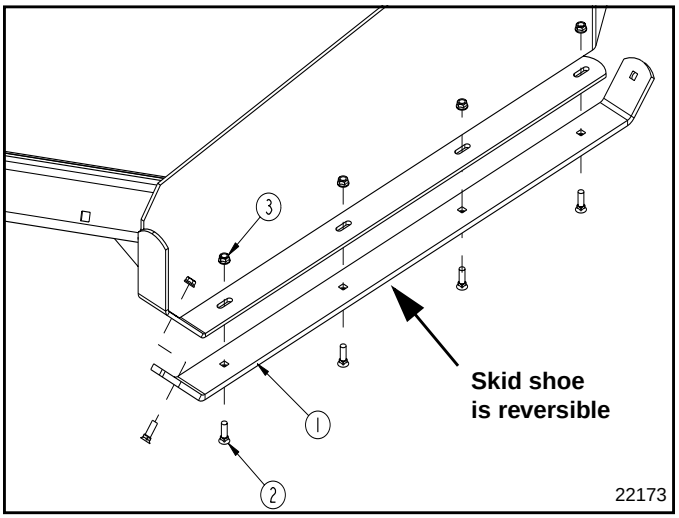

Wing Skid shoe
Figure 4-8

Weight Box Skid Shoe

Refer to Figure 4-8:

Replace wing skid shoes as follows:

1. Remove 3/8" hex whiz nuts (#3), 3/8" plow bolts (#2) and wing skid shoe (#1) as shown.
2. Plow bolts (#2) should be checked for wear and replaced if necessary.
3. Attach new skid shoe (#1) to cutter with existing 3/8” plow bolts (#2) and secure with 3/8" hex whiz nuts. Torque to 31 ft. lbs.

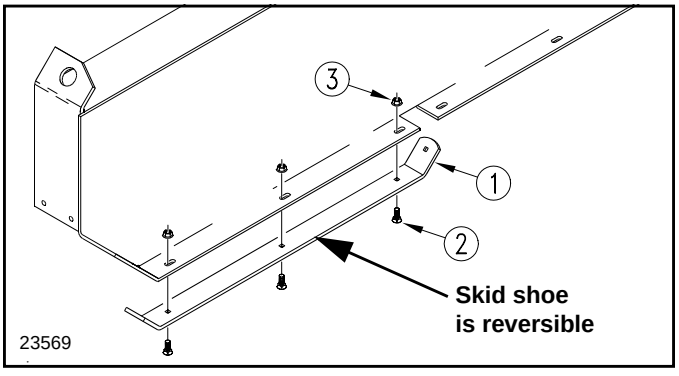

Wing Skid shoe
Figure 4-9

Tractor Maintenance

One of the most important things you can do to prevent hydraulic system problems is to ensure that your tractor's reservoir remains free of dirt and contamination.

Use a clean cloth to wipe the hose ends before attaching them to your tractor. Replace the filter element for your tractor’s hydraulic system at the prescribed intervals. These simple maintenances will go a long way to prevent the occurrence of control valve and hydraulic cylinder problems.

Storage

It is good practice to clean, inspect, service and make necessary repairs to the cutter when parking it for long periods and when parking it at the end of a working season. This will help ensure the cuter is ready for field use the next time you hook-up to it.

DANGER!

Always disconnect main driveline from tractor PTO and secure cutter deck in the up position with solid supports before servicing the underside of the cutter.

1. Clean off any dirt and grease that may have accumulated on the cutter and moving parts. Scrape off compacted dirt from the bottom of deck and then wash surface thoroughly with a garden hose. A coating of oil may also be applied to the lower deck area to minimize oxidation.
2. Check blades and blade bolts for wear and replace if necessary. See “Cutter Blade Maintenance” on page 22.
3. Inspect for loose, damaged or worn parts and adjust or replace as needed.
4. Lubricate as noted in “Lubrication Points” starting on page 29.
5. Replace all damaged or missing decals.
6. Store cutter on a level surface in a clean, dry place. Inside storage will reduce maintenance and make for a longer cutter life.
7. Follow all unhooking instructions on page 16 when disconnecting tractor from cutter.
8. Repaint parts where paint is worn or scratched to prevent rust. Ask your dealer for Aerosol Land Pride touch-up paint. They are also available in touch-up bottles with brush, quarts and gallon sizes by adding TU, QT or GL to the end of the Aerosol part number.

Land Pride Touch-up Paint

Part No.	Part Description
821-011C	PAINT LP BEIGE SPRAY CAN
821-002C	PAINT LP BLACK SPRAY CAN
821-054C	PAINT MEDIUM RED SPRAY CAN
821-058C	PAINT GREEN SPRAY CAN

Lubrication Points

Lubrication Legend	Multi-purpose spray lube	Multi-purpose grease lube	Multi-purpose oil lube	50 hrs	Intervals in hours at which lubrication is required

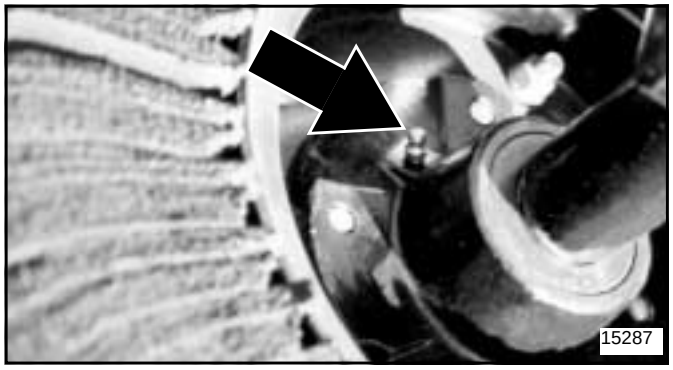

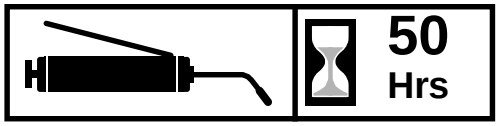

Axle Hub Bearing

Repack wheel bearings

Type of Lubrication: Wheel Bearing Grease

Quantity = Coat Generously

NOTE: The tailwheel hub is equipped with a relief hole located directly opposite the grease fitting. The relief hole releases pressure from inside the hub casting when it is greased. The hub should be greased until grease purges from the relief hole.

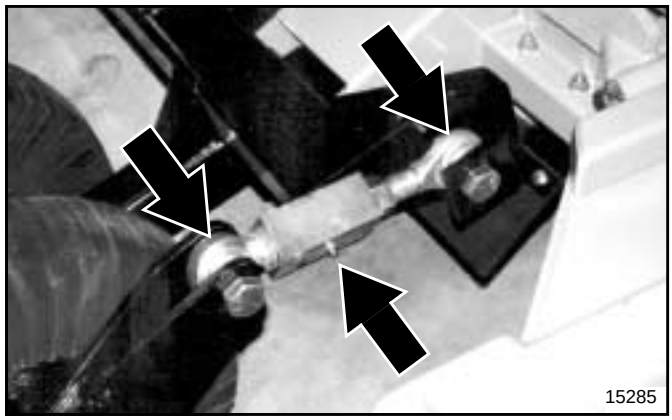

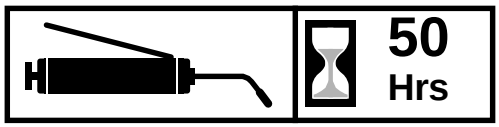

Adjustable Turnbuckle

Type of Lubrication: Multi-Purpose Grease

Quantity = As required

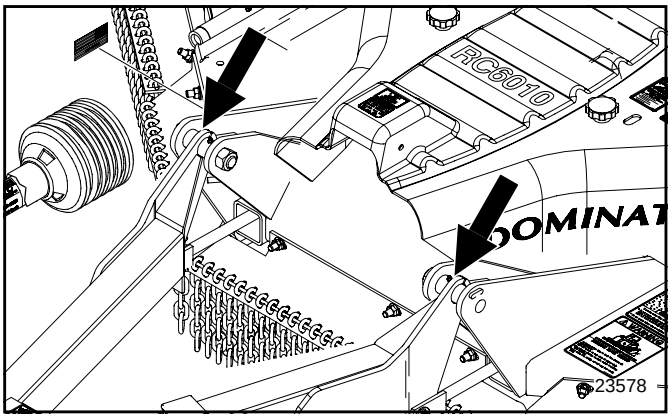

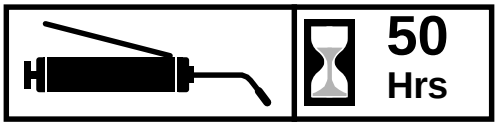

Main Hitch

Type of Lubrication: Multi-Purpose Grease
Quantity = As required

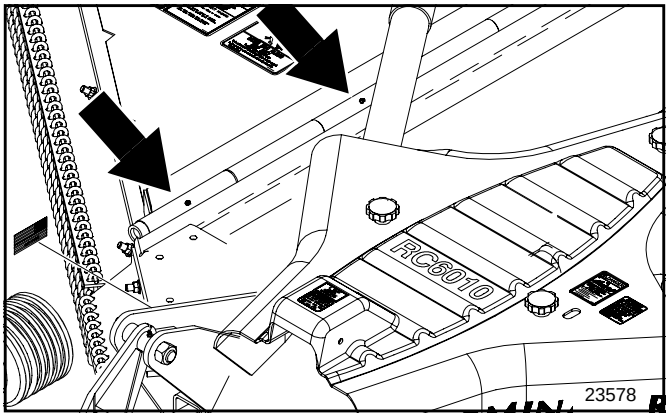

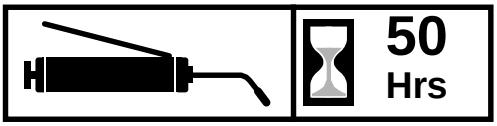

Wing Hinges

Type of Lubrication: Multi-Purpose Grease
Location = Multiple hinge points
Quantity = As required

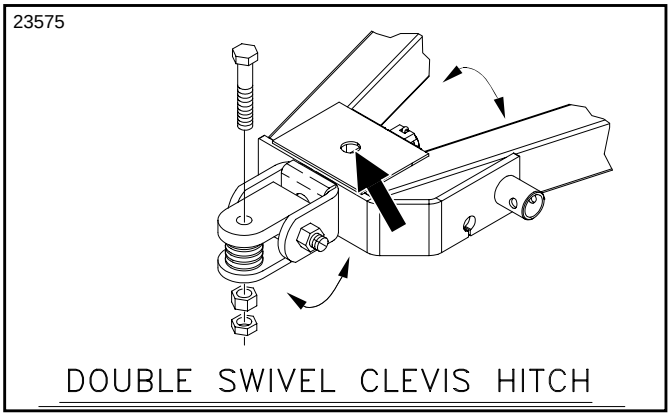

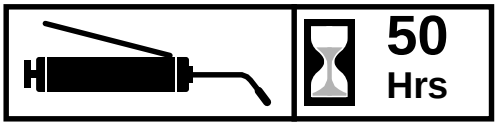

Double Swivel Clevis Hitch

Type of Lubrication: Multi-purpose Grease

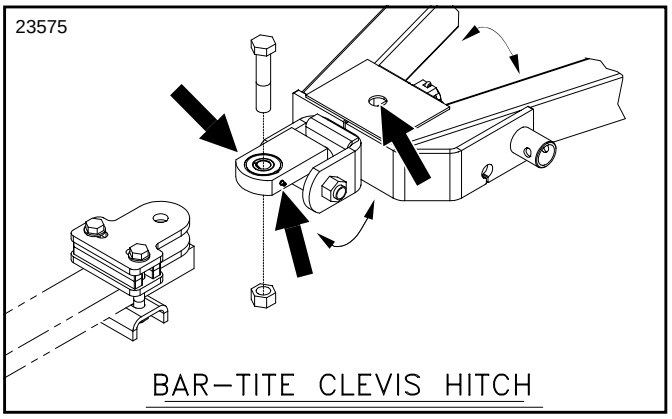

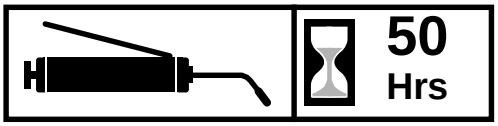

Bar-Tite Clevis Hitch

Type of Lubrication: Multi-purpose Grease

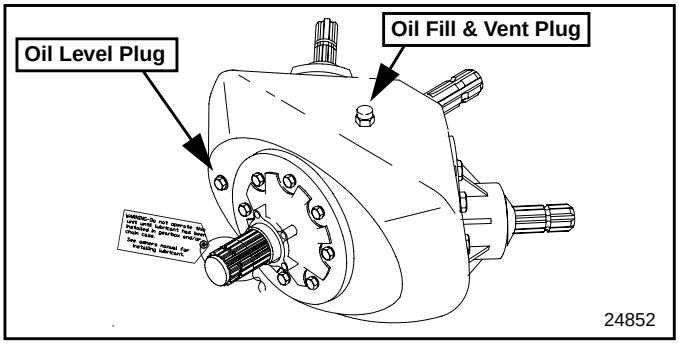

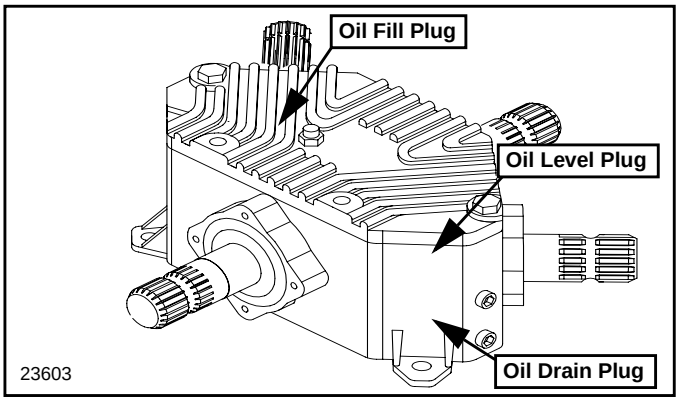

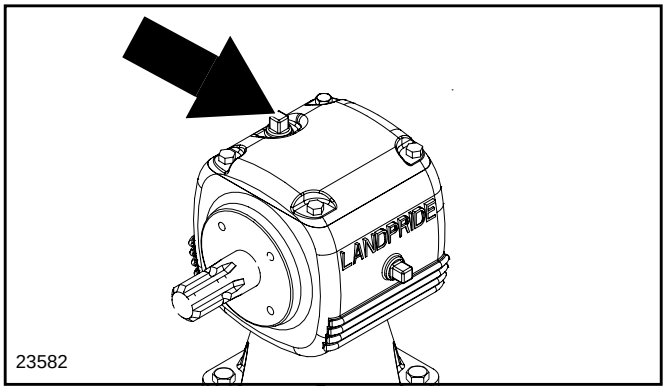

IMPORTANT: Your cutter is shipped with the gearbox vent plug with dipstick packaged in the Operator's Manual bag and should have been installed in the gearbox by your Land Pride dealer. Please see your Land Pride dealer if the vent plug with dipstick was not included.

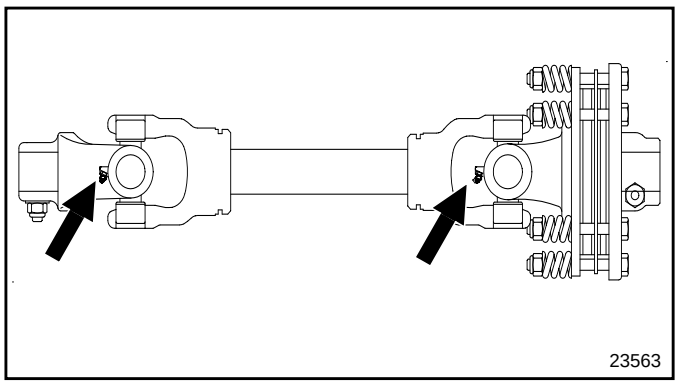

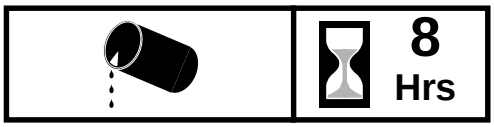

Divider Box

Type of Lubrication: 80-90W EP

Quantity = As required

NOTE: Do not overfill! Cutter should be level when checking oil. If, for any reason, all oil has been removed from gearbox, refill to level plug and allow air to bleed up from lower cavity, then recheck.

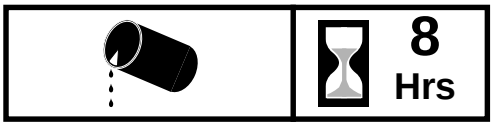

Gearbox

IMPORTANT: Do not overfill! Level cutter and wait for gearbox oil to cool before checking. An unlevel cutter or a gearbox with hot oil will not show correct oil level on the dipstick.

Make sure wings are down. Unscrew top vent plug in gearbox to remove dipstick. Wipe excess oil from dipstick and screw it back into the plug hole. Remove dipstick again and check oil level mark on dipstick. If low, fill through top plug hole in gearbox with EP90 oil until oil reaches full mark on dipstick. Reinstall vent plug with dipstick and tighten.

Take your gearbox to a Land Pride dealer if it requires service.

Type of Lubrication: EP90 Oil

Quantity = Fill until oil reaches full mark on dipstick.

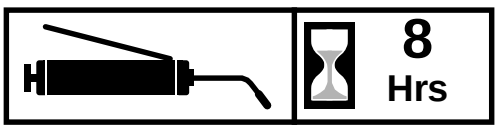

Intermediate Driveline Joints

Type of Lubrication: Multi-purpose Grease

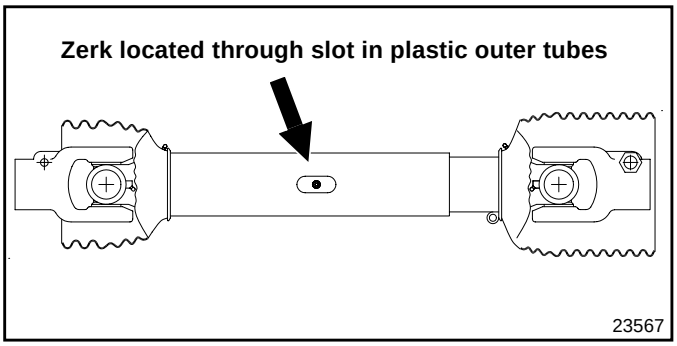

Drivelines with external profile tube grease point

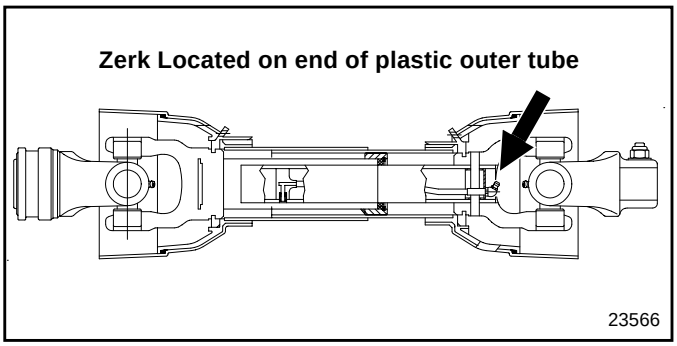

Drivelines with internal profile tube grease point

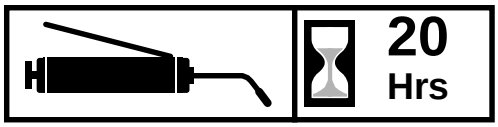

Conventional Driveline Profile Tubes

Type of Lubrication: Multi-purpose Grease

Quantity = Coat Generously

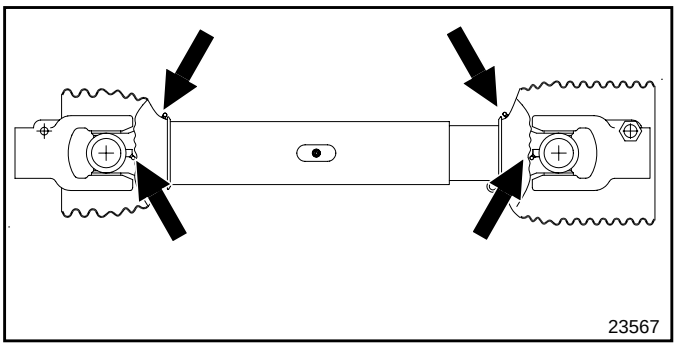

Drivelines with external profile tube grease point

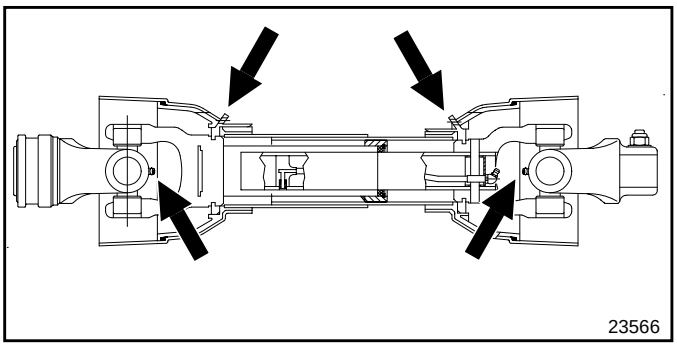

Drivelines with internal profile tube grease point

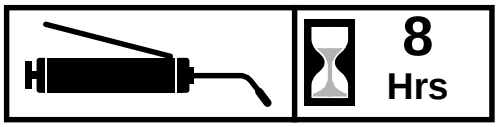

Conventional Driveline Joints & Shields

Type of Lubrication: Multi-purpose Grease

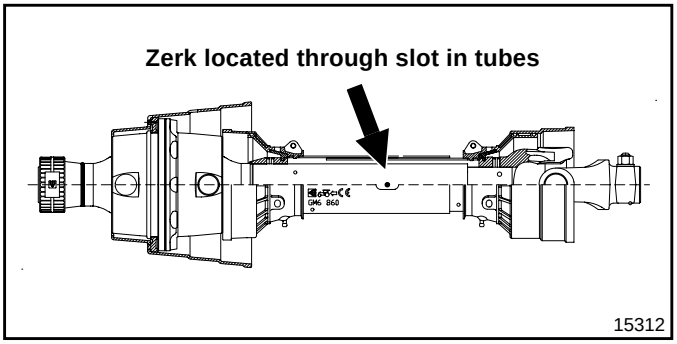

Drivelines with external tube grease point

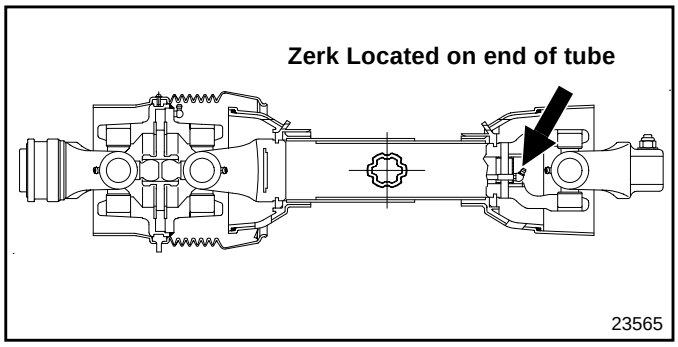

Drivelines with internal tube grease point

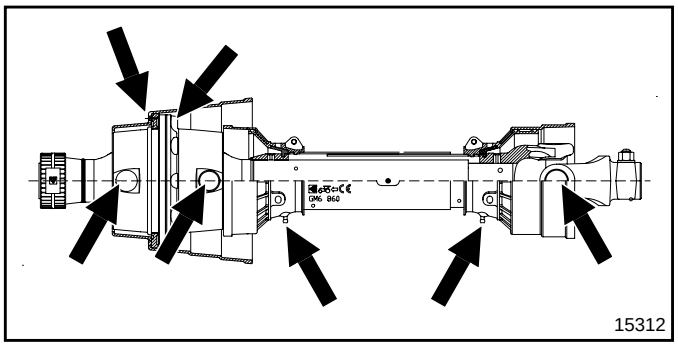

Drivelines with external tube grease point

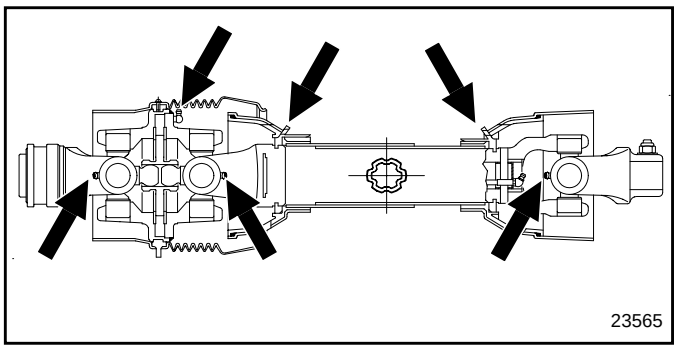

Drivelines with internal tube grease point

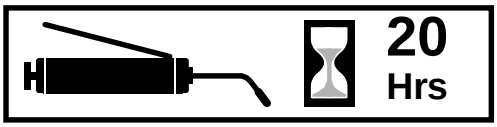

Constant Velocity Input Driveline Profile Tubes

Type of Lubrication: Multi-purpose Grease

Quantity = Coat Generously

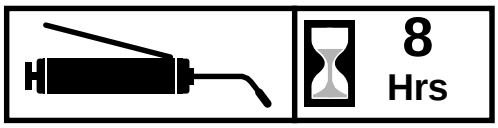

Constant Velocity Input Driveline Joints & Shields

Type of Lubrication: Multi-purpose Grease

NOTE: To extend the life of the constant velocity joint, extensive lubrication must be performed every 8 hours of operation.

- The constant velocity joint should be greased in a straight position forcing grease through the passages and into the cavity. After lubrication, grease should be visible around the ball joints.
- The constant velocity driveline comes equipped with a grease zerk in the outer telescoping member and must be greased every 8 hours to prevent premature failure of the joint.
- Grease fittings are located on the u-joints and driveline shields and should be lubricated every 8 hours of operation.

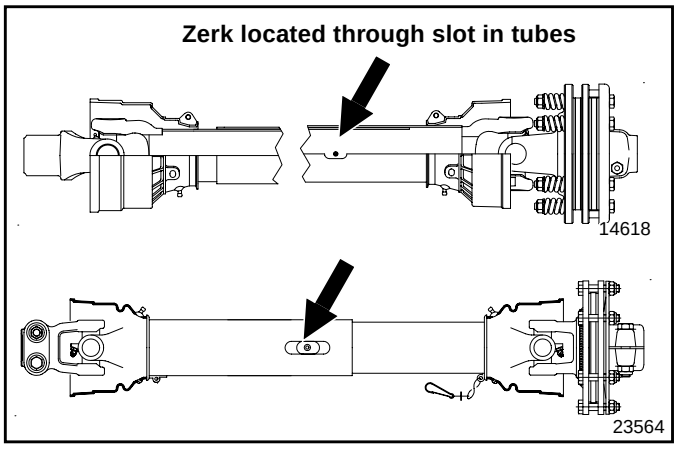

Drivelines with external tube grease point

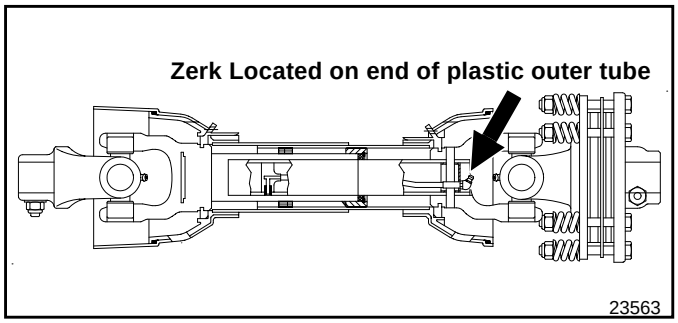

Drivelines with internal profile tube grease point

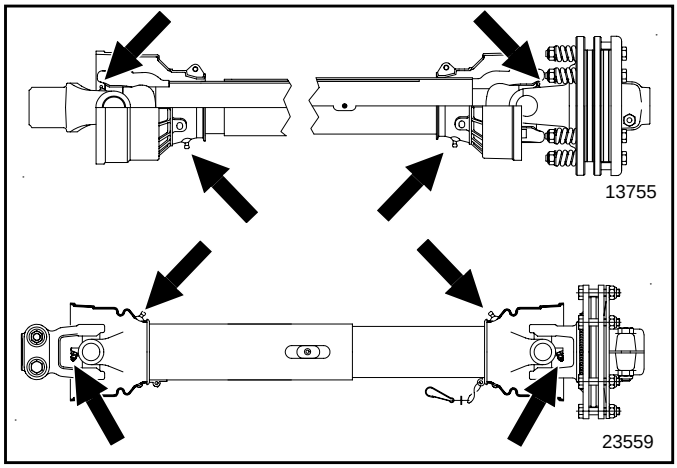

Drivelines with external profile tube grease point

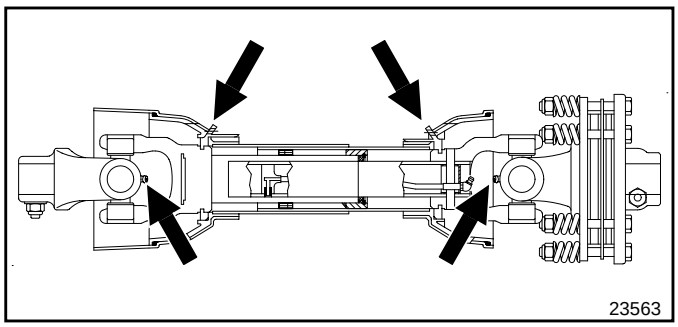

Drivelines with internal profile tube grease point

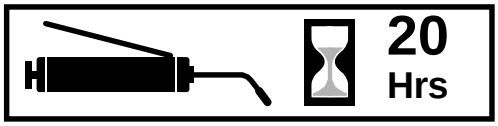

Wing Driveline Profile Tubes

Type of Lubrication: Multi-purpose Grease

Quantity = Coat Generously

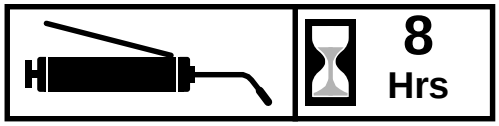

Wing Driveline Joints & Shields

Type of Lubrication: Multi-purpose Grease

RCB6010 & RCB6015 Series		
	RCB6010	**RCB6015**
Cutting Width **Overall Width** **Minimum Transport Width**	120” 135” 96”	180” 189” 96”
Cutting Height	2” - 14”	
Overall Length	181" w/Lam. Tire	194" w/Lam. Tire
Deck Material Thickness	3/16”	
Deck Height	10 1/2”	
Hitch Type	Pull, Self - Leveling	
Blades - (2 per Carrier)	1/2” x 4” Heat Alloy Steal Free Swinging High Lift Low Friction	
Blade Tip Speed	540 RPM PTO: FPM Center Blade: 14933 Wing Blade: 15036 1000 RPM PTO: FPM Center Blade: 15632 Wing Blade: 14651	
Blade Holders	Round Pan with 1” x 22” steel plate support	
PTO Drive Shafts	540 PTO: ASAE Category 5 {Input Shafts} 1000 PTO: ASAE Category 4 {Output Shafts}	
Driveline Slippage Protection	540: 4-plate Slip Clutch Int. Drv. 1000: 2-plate Slip Clutch Int. Drv. 4-plate Wing Drv.	
Power Divider	540 RPM or 1000 RPM Tapered Roller Bearings, Beveled Gears Cast Iron Housing, 180 Horse Power	
Gear Boxes	540 RPM or 1000 RPM Tapered Roller Bearings, Conical Gears Cast Iron Housing, 140 Horse Power	
Tailwheel - Pull Type	6.00 x 9 x 19 Laminated or 5 x 15 Rim 25.5 x 8.0-14 18 Ply-tube-type Airplane	
Shock Load Suspension	Springs on center axle	
Machine Weight (With front / rear chain guards)	3880 lbs. Approx.	4919 lbs. Approx.
Tongue Weight	1350 lbs.	1450 lbs.
Min. PTO Horse Power	50	

RCB6010 & RCB6015 Bid Specification Rotary Cutters

Features	Benefits
250 HP Splitter box	Highest gearbox rating in its class.
210 HP wing boxes	Highest gearbox rating in its class.
Tractor HP range	50 - 250 HP
Left wing counter rotates	Better discharge of material. (Refers to RCB6015 cutters with 2 wing decks.)
Factory assembled	Arrives ready for the customer. Saves the customer set up time.
Gearbox warranty	S/N 325492+ 5 years on housing, gears and shafts, 3 years on seals & bearings. S/N 325491- 1 year warranty.
2 3/8" Gearbox output shaft	Large output shaft handles shock loads better.
Star profile Cat. 5 drivelines	Increased strength in driveline. Holds up to shock loads and harsh mowing conditions.
Input driveline	Cat. 5 constant velocity or conventional u-joint available.
Wing drivelines	Choice of Cat. 4 or Cat. 5 to match up to customers needs.
540 or 1000 RPM	Fits wide variety of tractors.
Dual swiveling clevis hitch	Clevis hitch bolts to tractor draw bar and swivels left to right and front to back. This allows cutter to float but hitch stays rigid on drawbar, which eliminates drawbar wear.
Gearbox seal protection	Gearbox bottom seal is protected for longer bearing life.
All-welded deck	Deck is 100% welded which offers additional strength and keeps moisture and dirt from getting trapped in tight places, which hastens rust over time.
3/16" Deck thickness	Heavy gauge material aids in resisting damage from debris hitting the underside of the deck.
1/4" Sidewall thickness	Reduces debris piercing possibilities.
10 1/2" Deck height	Handles heavy cutting, which reduces balling up of cut material under the deck.
2" to 14" Cutting Height	Cover a wide range of cutting conditions.
6" Blade overlap	Eliminates skipping during turns.
4" Cutting capacity	Enables the cutter to be used in pastures with small trees up to 4" in diameter.
High blade tip speed	(540 rpm = 15,268 fpm center & 15,000 fpm wings) (1000 rpm = 15,578 fpm center & 14,620 fpm wings) Allows clean cutting of material.
Chain guards	Front and rear double chain guards are available with cable to reduce thrown objects.
Replaceable skid shoes	Can be replaced when damaged or worn out on wings and center deck.
3/16" Round stump jumper with 1" thick plate	1" Thick plate offers superior support and protection to gearbox output shaft.
Underside deck rings	Fully welded 1/2 " x 3" deck rings on underside of each deck eliminates blades getting in deck, and offers additional overall strength to the decks.
4 Plate slip-clutch	Protects drivelines and gearboxes by slipping clutches rather than twisting the driveline when impacts are encountered.
Easy to Grease drivelines	Drivelines have access holes to grease the U-joints of the driveline, as well as holes to grease the inner profiles.
Hinged wing sections	Allow you to shape the cutter to the job. Ideal for rough ground where hillsides, ditches and hollows can cause uneven cutting.
1" Solid hinge rods	Larger diameter hinge rod gives greater strength to the cutter from front to rear, and in the hinge area itself.
Wing hydraulics	Wing hydraulics are plumbed independently to allow the user to raise one wing at a time, which can aid in going through narrow spaces.
Mechanical winch (optional)	Mechanical winch aids in folding the cutter in the event of hydraulic failure.
Wing transport locks	Transport wing locks securely hold wings in the folded position in case of hydraulic failure.
Slow moving vehicle sign	Standard equipment to make operating conditions safer.
Enclosed front to rear dual leveling rods	Dual leveling rods enable the cutter to pull equally on the rear axle during uneven terrain vs. just pulling from one side of the front hitch.
Airplane tire option with optional foam sealant	Airplane tires give better cushion while transporting the cutter. Available with heavy-duty foam which virtually eliminates flats.
Laminated tires option	Can't go flat.
Replaceable wheel spindles	Wheel spindles can be replaced easily by removing two bolts vs. replacing the entire axle.
Wheels	6 or 8 Wheel option.
Spring cushioned center-axle	Protects unit from bumps and ground shock.
Walking Tandem Axles Option	Better flotation over rough terrain.
Rear axle pull ring	Aids in getting unit out of soft ground conditions.
Surpassed rugged industry standards	All Land Pride Cutters have been designed and tested and meet rigorous voluntary testing procedures specified by ANSI.
Paint options	Choice of red, green or tan to match popular tractor lines.

Problem	Solution
Oil seal leaking	Drain to level fill hole
	Replace seals
	Clean off wrapped material and check seal areas daily
Driveline yoke or shock cross failing	Avoid hitting solid objects
	Lubricate every 8 hours
Slip Clutches slip even with a light load	Replace clutch plates
	Remove foreign object
Bent Driveline shaft (Note: Driveline shaft should be repaired or replaced if bent)	Reduce lift height in transport position
	Reposition drawbar
	Shorten Power Take Off shaft
Driveline shaft telescoping tube failing	Avoid hitting solid objects
Driveline shaft telescoping tube wearing	Lubricate every 20 hours of operation
Blades wearing excessively	Raise cutting height
Blades coming loose	Tighten blade hardware, refer to “Cutter Blade Maintenance” starting on page 22.
Blades breaking	Avoid solid objects
Loose blade carrier	Replace gearbox bearings and / or shaft
	Tighten shaft nut to specified torque
Blade carrier bent	Avoid hitting solid objects
Excessive side skid wear	Adjust cutter height
	Raise cutting height
Excessive vibration	Replace Power Take Off or distribution shaft
	Replace blade carrier
	Replace blade
	Inspect and unlock blades
	Disassemble and inspect for incorrectly located needles or damaged bearing cap
	Replace each pair of blades on affected carrier
Wing cylinder movement too slow	Remove elbow fitting and remove orifice

Torque Values Chart

Bolt Size (Inches)	Bolt Head Identification Grade 2		Grade 5		Grade 8	
in-tpi [1]	N·m [2]	ft-lb [3]	N·m	ft-lb	N·m	ft-lb
1/4" - 20	7.4	5.6	11	8	16	12
1/4" - 28	8.5	6	13	10	18	14
5/16" - 18	15	11	24	17	33	25
5/16" - 24	17	13	26	19	37	27
3/8" - 16	27	20	42	31	59	44
3/8" - 24	31	22	47	35	67	49
7/16" - 14	43	32	67	49	95	70
7/16" - 20	49	36	75	55	105	78
1/2" - 13	66	49	105	76	145	105
1/2" - 20	75	55	115	85	165	120
9/16" - 12	95	70	150	110	210	155
9/16" - 18	105	79	165	120	235	170
5/8" - 11	130	97	205	150	285	210
5/8" - 18	150	110	230	170	325	240
3/4" - 10	235	170	360	265	510	375
3/4" - 16	260	190	405	295	570	420
7/8" - 9	225	165	585	430	820	605
7/8" - 14	250	185	640	475	905	670
1" - 8	340	250	875	645	1230	910
1" - 12	370	275	955	705	1350	995
1-1/8" - 7	480	355	1080	795	1750	1290
1 1/8" - 12	540	395	1210	890	1960	1440
1 1/4" - 7	680	500	1520	1120	2460	1820
1 1/4" - 12	750	555	1680	1240	2730	2010
1 3/8" - 6	890	655	1990	1470	3230	2380
1 3/8" - 12	1010	745	2270	1670	3680	2710
1 1/2" - 6	1180	870	2640	1950	4290	3160
1 1/2" - 12	1330	980	2970	2190	4820	3560

Bolt Size (Metric)	Bolt Head Identification 5.8 Class 5.8		8.8 Class 8.8		10.9 Class 10.9	
mm x pitch	N·m	ft-lb	N·m	ft-lb	N·m	ft-lb
M 5 X 0.8	4	3	6	5	9	7
M 6 X 1	7	5	11	8	15	11
M 8 X 1.25	17	12	26	19	36	27
M 8 X 1	18	13	28	21	39	29
M10 X 1.5	33	24	52	39	72	53
M10 X 0.75	39	29	61	45	85	62
M12 X 1.75	58	42	91	67	125	93
M12 X 1.5	60	44	95	70	130	97
M12 X 1	90	66	105	77	145	105
M14 X 2	92	68	145	105	200	150
M14 X 1.5	99	73	155	115	l215	160
M16 X 2	145	105	225	165	315	230
M16 X 1.5	155	115	240	180	335	245
M18 X 2.5	195	145	310	230	405	300
M18 X 1.5	220	165	350	260	485	355
M20 X 2.5	280	205	440	325	610	450
M20 X 1.5	310	230	650	480	900	665
M24 X 3	480	355	760	560	1050	780
M24 X 2	525	390	830	610	1150	845
M30 X 3.5	960	705	1510	1120	2100	1550
M30 X 2	1060	785	1680	1240	2320	1710
M36 X 3.5	1730	1270	2650	1950	3660	2700
M36 X 2	1880	1380	2960	2190	4100	3220

[1] in-tpi = nominal thread diameter in inches-threads per inch

[2] N· m = newton-meters

[3] ft-lb= foot pounds

[4] mm x pitch = nominal thread diameter in millimeters x thread pitch

Torque tolerance + 0%, -15% of torquing values. Unless otherwise specified use torque values listed above.

Additional Torque Values

Blade Bolt Lock Nut	450 ft-lbs.
Blade Carrier Hub Nut	550 ft-lbs. minimum
Wheel Lug Nuts	85 ft-lbs.

Tire Inflation Chart

Tire Size	Inflation PSI
25.5 x 8.0" - 14	35

Warranty

Land Pride warrants to the original purchaser that this Land Pride product will be free from defects in material and workmanship beginning on the date of purchase by the end user according to the following schedule when used as intended and under normal service and conditions for personal use.

Overall Unit and Drivelines: One year Parts and Labor

Gearbox:

(S/N 325492+) Five years Parts and Labor.

(S/N 325491-) Five year on housing, gears, and shaft.
One year on seals and bearings.

Hydraulic Cylinder: One year Parts and Labor
Hoses and seals considered wear items

Blades, Tires, and Driveline Friction Discs: Considered wear items.

This Warranty is limited to the repair or replacement of any defective part by Land Pride and the installation by the dealer of any such replacement part, and does not cover common wear items such as blades, belts, tines, etc. Land Pride reserves the right to inspect any equipment or parts which are claimed to have been defective in material or workmanship.

This Warranty does not apply to any part or product which in Land Pride's judgment shall have been misused or damaged by accident or lack of normal maintenance or care, or which has been repaired or altered in a way which adversely affects its performance or reliability, or which has been used for a purpose for which the product is not designed. Misuse also specifically includes failure to properly maintain oil levels, grease points, and driveline shafts.

Claims under this Warranty must be made to the dealer which originally sold the product and all warranty adjustments must be made through such dealer. Land Pride reserves the right to make changes in materials or design of the product at any time without notice.

This Warranty shall not be interpreted to render Land Pride liable for damages of any kind, direct, consequential, or contingent to property. Furthermore, Land Pride shall not be liable for damages resulting from any cause beyond its reasonable control. This Warranty does not extend to loss of crops, any expense or loss for labor, supplies, rental machinery or for any other reason.

No other warranty of any kind whatsoever, express or implied, is made with respect to this sale; and all implied warranties of merchantability and fitness for a particular purpose which exceed the obligations set forth in this written warranty are hereby disclaimed and excluded from this sale.

This Warranty is not valid unless registered with Land Pride within 30 days from the date of purchase by the end user.

IMPORTANT: The Online Warranty Registration should be completed by the dealer at the time of purchase. This information is necessary to provide you with quality customer service.

Model Number _____ **Serial Number** _____

Corporate Office: P.O. Box 5060
Salina, Kansas 67402-5060 USA
www.landpride.com