Rotary Cutters

RCF(M)45180

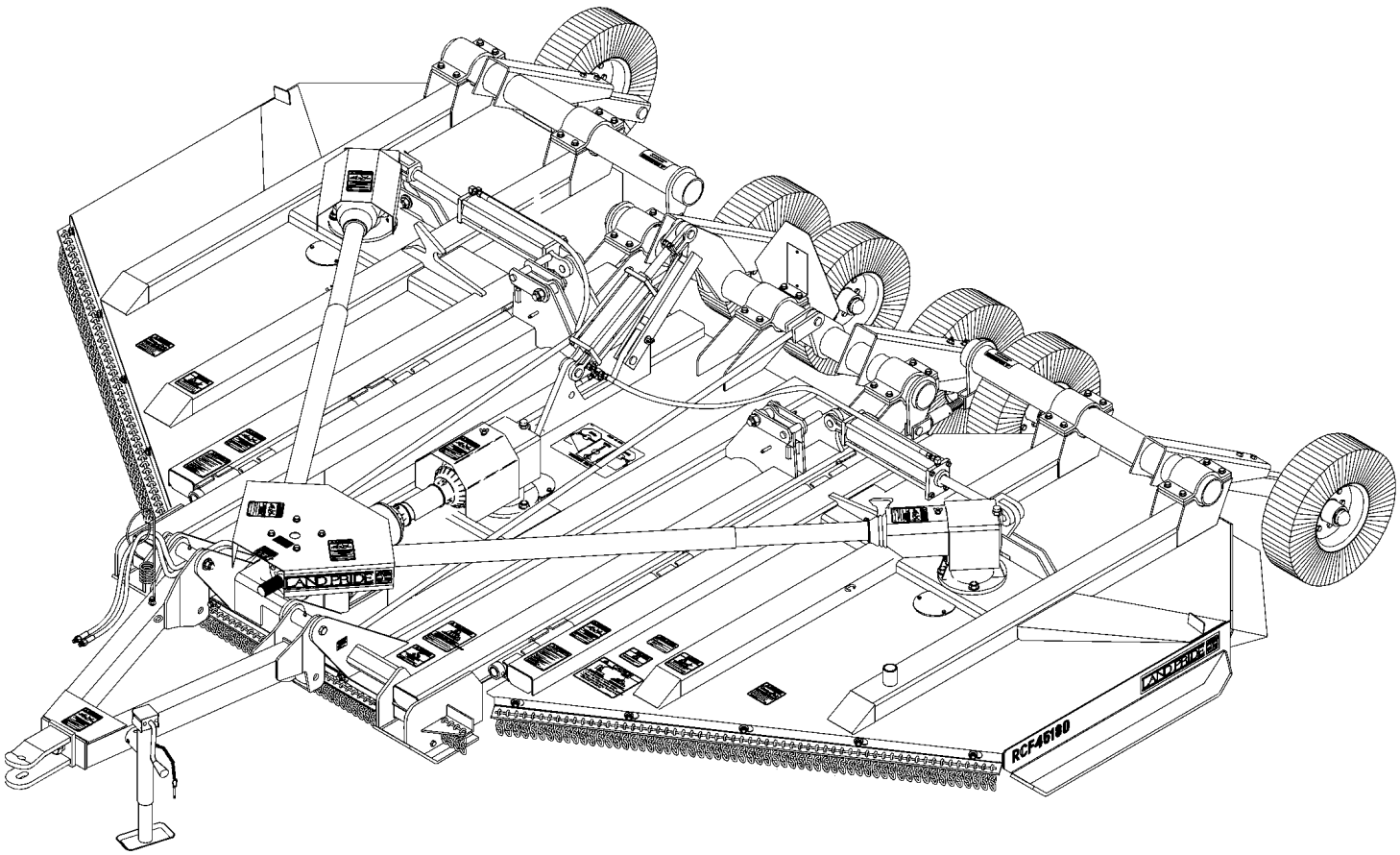

312-382P
Parts Manual

Land Pride

Read the Operator's Manual entirely. When you see this symbol, the subsequent instructions and warnings are serious - follow without exception. Your life and the lives of others depend on it!

© Copyright 2022 Printed 11/18/2022

Cover photo may show optional equipment not supplied with standard unit.

Table Of Contents

Section 1: Introduction **1**
- *Using This Manual* *1*
- *Manual Replacement Information* *1*
- *Manual Revisions* *1*
- *Touch-up Paint* *1*
- *Hardware Legend* *2*
- *Replacement Hardware* *2*
- *Serial Numbers* *2*
- *Part Number Service Coding* *2*

Section 2: Decks **3**
- *Deck Blade Carrier (S/N 160142-)* *3*
- *Deck Blade Carrier (S/N 160143+)* *5*
- *Deck Center (S/N 77360-)* *7*
- *Deck Center (S/N 77361 to 119280)* *9*
- *Deck Center (S/N 119281 to 160142)* *11*
- *Deck Center (S/N 160143+)* *13*
- *Deck Center (S/N 160143+) Continued* *17*
- *Deck Left & Right Hand (S/N 77361-)* *19*
- *Deck Left & Right Hand (S/N 77362 to 119280)* *21*
- *Deck Left & Right Hand (S/N 119281 to 160142)* *23*
- *Deck Left & Right Hand (S/N 160143+)* *25*
- *Deck Lift* *27*
- *Hitch (S/N 74020-)* *29*
- *Hitch (S/N 74021 to 116033)* *31*
- *Hitch (S/N 116034+)* *33*

Section 3: Axles **35**
- *Axle Center* *35*
- *Axle to Center Deck* *37*
- *Axle Wing* *39*

Section 4: Guards **41**
- *Guards Center Deck (S/N 160278-)* *41*
- *Guards Center Deck (S/N 160279+)* *43*
- *Guards Wing Deck (S/N 160278-)* *45*
- *Guards Wing Deck Front (S/N 160279+)* *47*
- *Guards Wing Deck Rear (S/N 160279+)* *49*

Section 5: Drivelines **51**
- *Driveline Arrangement- 1000 RPM* *51*
- *Driveline Arrangement- 540 RPM* *53*
- *Driveline (826-643C) Weasler* *55*
- *Driveline 540 RPM (826-094C) (S/N 82428 to 115620)* *57*
- *Driveline Center (826-078C) (S/N 82427-)* *59*
- *Driveline Center (826-095C) (S/N 82428 to 115260) (S/N 119063 to 134999)* *61*
- *Driveline Center (826-115C) (S/N 115261 to 119062) (S/N 135000+)* *63*
- *Driveline Center 540 RPM (826-114C) (S/N 115261+)* *65*
- *Driveline Conv. 1000 RPM (826-084C) (S/N 115260-)* *67*
- *Driveline Conv. 1000 RPM (826-113C) (S/N 115261+)* *69*
- *Driveline Conv. 540 RPM (826-083C) (S/N 115260-)* *71*
- *Driveline Conv. 540 RPM (826-112C) (S/N 115261+)* *73*
- *Driveline CV 1000 RPM (826-077C) (S/N 82427-)* *75*
- *Driveline CV 1000 RPM (826-099C) (S/N 82428 to 115260)* *77*
- *Driveline CV 1000 RPM (826-118C) (S/N 115261+)* *79*
- *Driveline CV 1000 RPM (826-244C) Walterscheid* *81*
- *Driveline CV 1000 RPM (826-477C) Comer (Service Only)* *83*
- *Driveline CV 540 RPM (826-076C) (S/N 82427-)* *85*
- *Driveline CV 540 RPM (826-098C) (S/N 82428 to 115260)* *87*
- *Driveline CV 540 RPM (826-117C) (S/N 115261+)* *89*
- *Driveline CV 540 RPM (826-476C) Comer (Service Only)* *91*
- *Driveline Slip Clutch (676548303) Bondioli (S/N 82427-)* *93*
- *Driveline Slip Clutch (053385)* *95*
- *Driveline Slip Clutch (638237001, 638248001 & 638248006) Bondioli* *97*
- *Driveline Slip Clutch Wing (333919 & 053356)* *99*
- *Driveline Wing (826-079C) (S/N 82427-)* *101*

Driveline Wing (826-096C) (S/N 82428 to 115260) 103
Driveline Wing (826-116C) (S/N 115261+) 105
Section 6: Gearboxes 107
Gearbox (826-035C) OMNI (Square Housing) 107
Gearbox (826-038C) OMNI (Square Housing) 109
Gearbox (826-060C) OMNI 111
Gearbox (826-376C) Comer 113
Gearbox Center & Left Deck 540 RPM (826-069C) ITG 115
Gearbox Center Deck 1000 RPM (826-074C) ITG 117
Gearbox Divider 1000 RPM (826-072C) ITG (S/N 113823-) 119
Gearbox Divider 1000 RPM (826-072C) ITG (S/N 113824+) 121
Gearbox Divider 1000 RPM (826-253C) OMNI 123
Gearbox Divider 540 RPM (826-068C) ITG (S/N 111502-) 125
Gearbox Divider 540 RPM (826-068C) ITG (S/N 111503+) 127
Gearbox Divider 540 RPM (826-242C) OMNI 129
Gearbox Left Deck 1000 RPM (826-073C) ITG 131
Gearbox Right Deck 1000 RPM (826-075C) ITG 133
Gearbox Right Deck 1000 RPM (826-254C) COMER 135
Gearbox Right Deck 1000 RPM (826-254C) OMNI 137
Gearbox Right Deck 540 RPM (826-070C) ITG 139
Gearbox Right Deck 540 RPM (826-241C) COMER (Service Only) 141
Gearbox Right Deck 540 RPM (826-241C) ITG (Service Only) 143
Gearbox Right Deck 540 RPM (826-241C) OMNI (Service Only) 145
Section 7: Hydraulics 147
Hydraulic 3-Spool Control Valve Kit 147
Hydraulic Cylinder (810-162C) Cross 149
Hydraulic Cylinder (810-150C) Cross 151
Hydraulic Cylinder (810-150C) Midway 153
Hydraulic Cylinder (810-150C) Red Lion 155
Hydraulic Cylinder (810-162C) Midway 157
Hydraulic Cylinder (810-162C) Red Lion 159
Hydraulic Plumbing Standard Wing Fold 161
Hydraulic Selector Control Valve Kit 163
Hydraulics Optional Lift 165
Section 8: Decals 167
Decal Placement 167
Touch-up Paints - LP 169
Section 9: Options 171
RCF45180 Tire Options 171

General Information

Using This Manual

This manual is divided into sections. The first section contains General Information. The remaining sections divide the machine into segments (i.e. Frames, Drives, Hydraulics, etc.) which illustrate and list all parts. A Parts Number Index is located at the back of the book.

The Land Pride parts in this manual are specially designed for this machine and should be replaced with Land Pride parts only.

The information in this manual is current at time of printing. Some parts may change to assure top performance.

Right-hand and left-hand as used in this manual are determined by facing the direction the machine will travel while in use.

Below is an example of two facing pages from a parts manual. Familiarize yourself with the type of information contained on these pages.

Manual Replacement Information

Replacement manuals are available. Refer to our website at www.landpride.com or e-mail us at lit@landpride.com for additional information. Our website continues to provide the most up-to-date manuals available.

Touch-up Paint

Repaint parts where paint is worn or scratched to prevent rust. Aerosol cans and touch-up bottles with brush applicator are available through your local dealer. Also available are quart and gallon size paints. Add QT or GL to end of the Aerosol P/N.

Land Pride color descriptions and part numbers are listed on the "Land Pride Touch-Up Paints" page in the "Decals" section of this book.

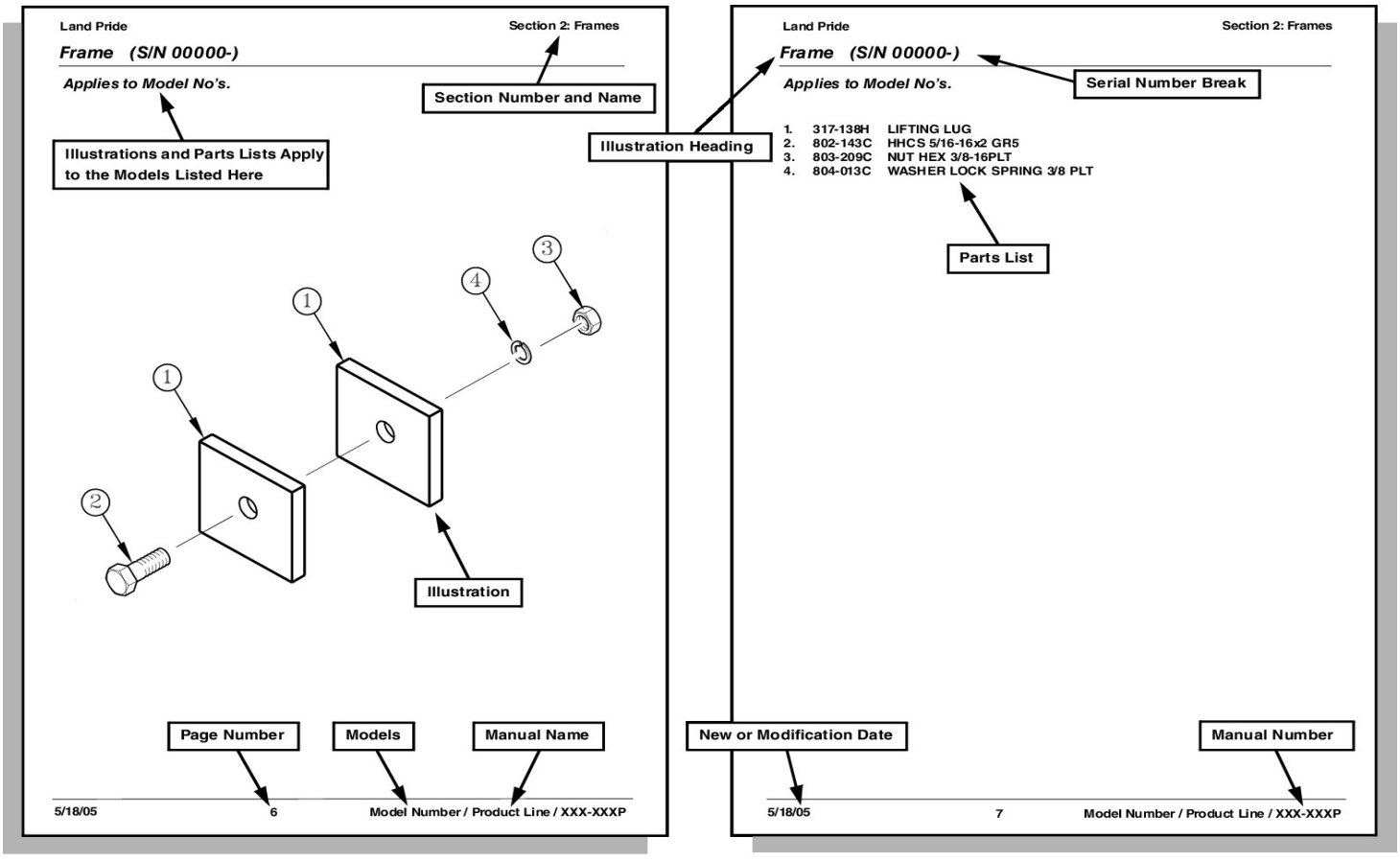

© Copyright 2022. All rights Reserved

Land Pride provides this publication "as is" without warranty of any kind, either expressed or implied. While every precaution has been taken in the preparation of this manual, Land Pride assumes no responsibility for errors or omissions. Neither is any liability assumed for damages resulting from the use of the information contained herein. Land Pride reserves the right to revise and improve its products as it sees fit. This publication describes the state of this product at the time of its publication, and may not reflect the product in the future. The illustrations in this manual are not intended for safe and proper assembly or disassembly of equipment. The illustrations are intended for ordering parts only.

Land Pride is a registered trademark.

All other brands and product names are trademarks or registered trademarks of their respective holders.

Printed in the United States of America.

Hardware Legend

AR	As Required
BLADE	Blade Bolt
C	Cap Screw
CP	Cotter Pin
CPHSSS	Cup Point Hex Socket Set Screw
CPSHSS	Cup Point Square Head Set Screw
CPSQHSS	Cup Point Square Head Set Screw
CRFCHMS3	Cross Recess Flat Countersunk Head Machine Screw
CRPHMS	Cross Recess Pan Head Machine Screw
CRPHTFS	Cross Recess Pan Head Thread Forming
CRRHMS	Cross Recess Round Head Machine Screw
CRTHMS	Cross Recess Truss Head Machine Screw
CSNB	Countersunk Square Neck Bolt
FHMS	Flat Head Machine Screw
FTC	Full Thread Cap Screw
H	Hex Nut
HCLN	Hex Center Lock Nut
HFLCS	Hex Flange Lock Cap Screw
HFS	Hex Flange Screw
HFSLN	Hex Flange Serrated Lock Nut
HFSS	Hex Flange Serrated Screw
HHCS	Hex Head Cap Screw or Metric Bolt
HSBHCS	Hex Socket Button Head Cap Screw
HSFCHCS	Hex Socket Flat Countersunk Head Cap Screw
HSHCS	Hex Socket Head Cap Screw
HSSS	Hex Socket Head Screw
HTLN	Hex Top Lock Nut
HWHCS	Hex Washer Head Cap Screw
HWHMS	Hex Washer Head Machine Screw
HXBHCS	Hex Socket Button Head Cap Screw
J	Hex Jam Nut
JIC	37 Degree Tapered Thread
L	Helical Spring Lock Washer
LUG	Lug Bolt
NFC	National Fine Cap Screw
NPSM	National Pipe Straight Mechanical
NPTF	National Pipe Taper Fuel
P	Wide Plain Washer
PHMS	Pan Head Machine Screw
PLOW	Plow Bolt
RHMS	Round Head Machine Screw
RHSNB	Round Head Square Neck Bolt
SCREW LEVELING	Leveling Screw
SCREW THUMB	Thumb Screw
SCREW WELD	Weld Screw
SFCHMS	Slotted Flat Countersunk Head Machine Screw
SFHMS	Slotted Fillister Head Machine Screw
SP	Special
SP SCREW	Special Screw
SQHSS	Square Head Set Screw
SRHMS	Slotted Round Head Machine Screw
SSS	Socket Set Screw
STCS	Self Tapping Cap Screw
STHMS	Slotted Truss Head Machine Screw
WHEEL	Wheel Studs and Hub Long Bolts
WING	Wing Bolt

Replacement Hardware

The **Hardware Legend** above lists hardware abbreviations used in the parts list. All bolts and nuts are Grade 5 unless otherwise noted. The use of improper grades of hardware can result in personal injury, damage to equipment, or loss of property.

Colored Replacement Parts

Land Pride offers replacement parts in factory standard colors and also on select models in Green, Orange, Red and Blue. Because of the variety of colors available, special attention must be given to the part number to prevent ordering the wrong replacement part.

A suffix number corresponding to one of the colors below must be added at the end of Land Pride's part number when ordering a replacement part with that color.

81 . . . . . Green **83 . . . . .Red**
82 . . . . . Orange **84 . . . . .Blue**

For example, if you are ordering a replacement part with part number 555-555C and the part you need is red, then add the suffix 83 to the end of the number to make the part number read 555-555C83. Parts ordered without a suffix number will be supplied in factory standard colors.

Black Replacement Parts

Some parts are factory standard black and some must be special ordered black. If your part is special ordered black, a second part number with the additional suffix number 85 on the end will be available. In this situation you must order that part with the suffix number for it to be black. Parts that are factory standard black will not have the suffix number.

Part Number Service Coding

Within the parts list some part numbers are coded for revisions and interchangeability. See notations in revision column.

Serial Numbers

Always use the serial and model number when ordering parts. Refer to the Operator's Manual for serial number plate location.

(S/N 20001+)	Includes serial numbers 20001 and above (to the latest number)
(S/N 10001 to 20000)	Includes serial numbers between and including 10001 and 20000
(S/N 10000-)	Includes serial numbers 10000 and below (to the earliest number)

Deck Blade Carrier (S/N 160142-)

Applies to Models: RCF45180, RCFM45180

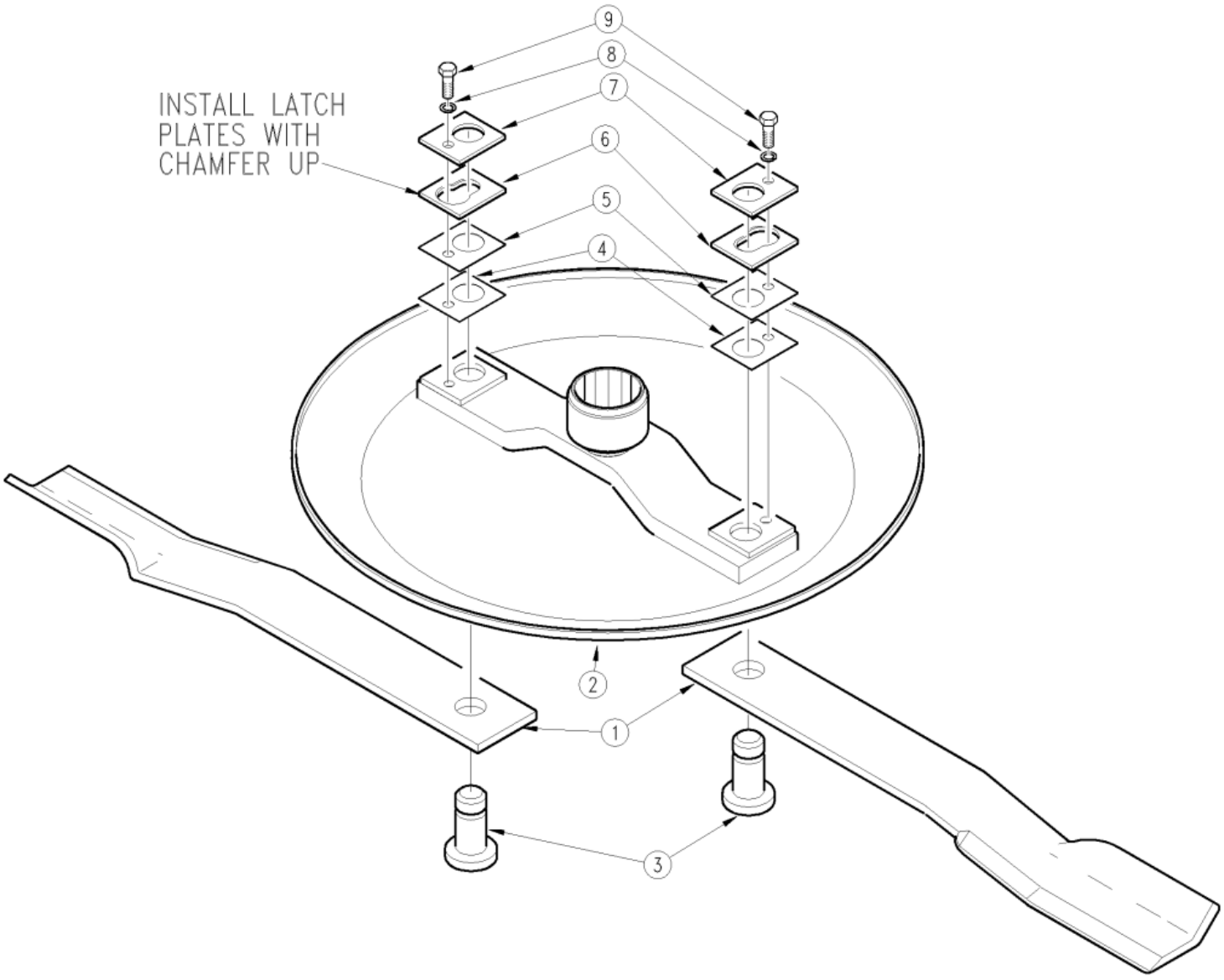

Deck Blade Carrier (S/N 160142-)

Applies to Models: RCF45180, RCFM45180

Ref.	Part No.	Part Description	Comments
	DWG11027	Drawing Image Number	
1	820-091C	CUTTER BLADE 1/2X4X25.75 CW	Left Hand Deck
1	820-092C	CUTTER BLADE 1/2X4X25.75 CCW	Right Hand Deck
1	820-090C	CUTTER BLADE 1/2X4X29 CCW	Center Deck
2	312-220H	21RND DSHPN WMT 13C/C ITG1.5OS	
2	312-308H	30RND DSHPN WMT 19C/C ITG15OS	
3	802-374C	BLADE BOLT 1 1/2 X 3 LG	(S/N 87908 <-> 160142) Rev. 2
3	802-341C	BLADE BOLT 1 1/2 X 3 LG	(RPBY 802-374C) Rev 1; Use up stock
4	312-449D	BLADE BOLT SHIM - 20 GA	
5	312-448D	BLADE BOLT SHIM - 18 GA	
6	890-231C	BLADE BOLT LATCH PLATE	(S/N 87908 <-> 160142) Rev. 3
6	890-220C	RPBY 890-231C	(Obsolete) Rev 2; Use up stock
6	312-451D	RPBY 890-220C	(Obsolete) Rev 1; Use up stock
7	312-450D	BLADE BOLT TOP PLATE	
8	804-015C	WASHER LOCK SPRING 1/2 PLT	
9	802-349C	HHCS 1/2-20X1 3/4 GR5 NYL	

Deck Blade Carrier (S/N 160143+)

Applies to Models: RCF45180, RCFM45180

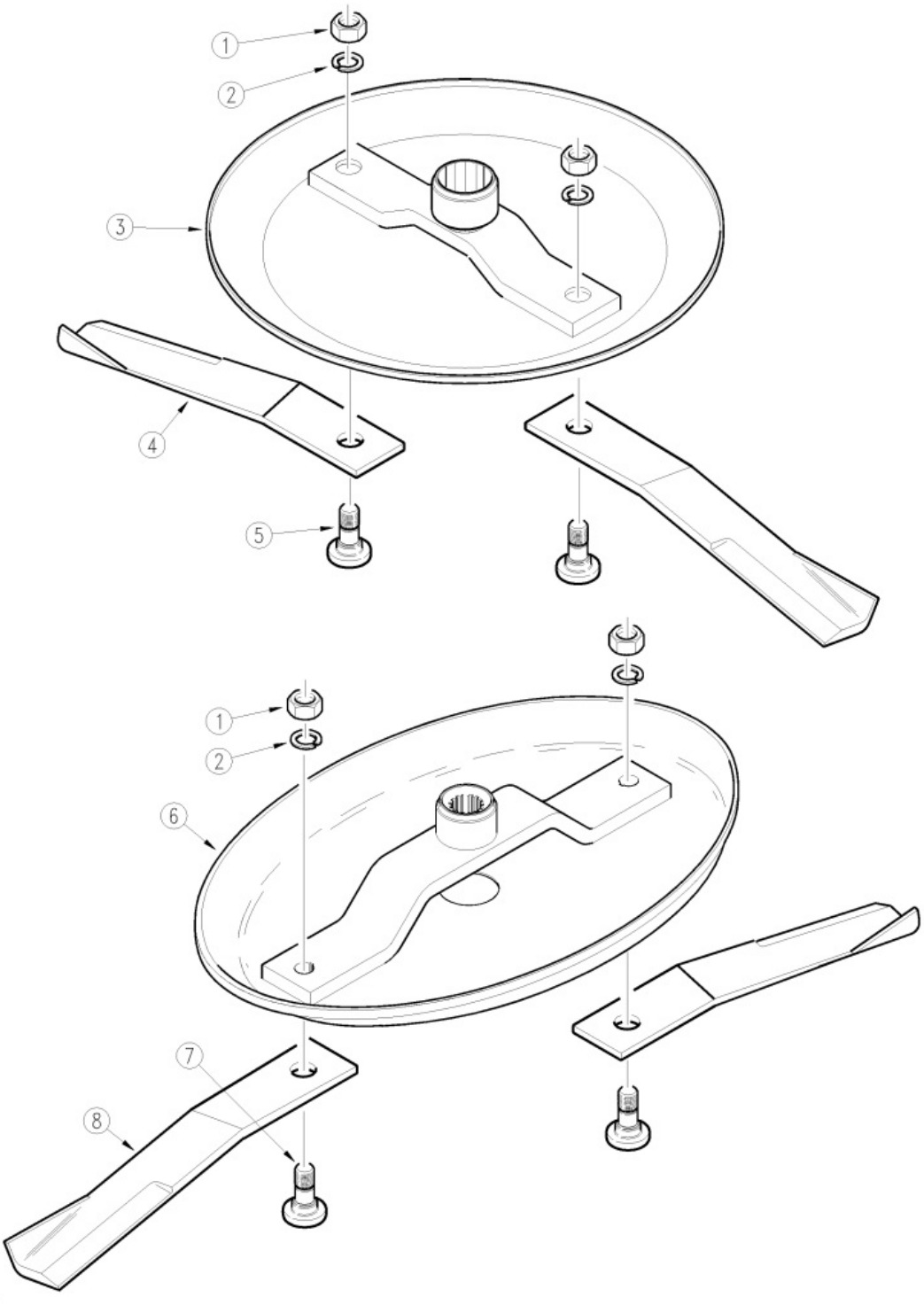

Deck Blade Carrier (S/N 160143+)

Applies to Models: RCF45180, RCFM45180

Ref.	Part No.	Part Description	Comments
	DWG14327	Drawing Image Number	
1	803-170C	NUT HEX TOP LOCK 1 1/8-12 PLT	
2	804-067C	WASHER LOCK 1 1/8	
3	312-434H	24RND DSHPN WMT 15C/C (1.5 OS)	
4	820-112C	CUTTER BLADE 1/2X4X25 CW	Standard Blade Left Hand Deck. Quantity 2 per deck
4	820-209C	CUTTER BLADE 1/2X4X25 LL CW	Optional Blade Left Hand Deck. Quantity 2 per deck
4	820-137C	CUTTER BLADE 1/2X4X25 CCW	Standard Blade Right Hand and Center Deck. Quantity 2 per deck
4	820-193C	CUTTER BLADE 1/2X4X25 LL CCW	Optional Blade Right Hand and Center Deck. Quantity 2 per deck
5	802-277C	BLD BLT 1 1/8-12X3.44 W/.25KEY	
6	312-433H	38OVL DSHPN WMT 27C/C (1.5OS)	
7	802-277C	BLD BLT 1 1/8-12X3.44 W/.25KEY	
8	820-137C	CUTTER BLADE 1/2X4X25 CCW	Standard Blade Right Hand and Center Deck. Quantity 2 per deck
8	820-193C	CUTTER BLADE 1/2X4X25 LL CCW	Optional Blade Right Hand and Center Deck. Quantity 2 per deck

Deck Center (S/N 77360-)

Applies to Models: RCF45180, RCFM45180

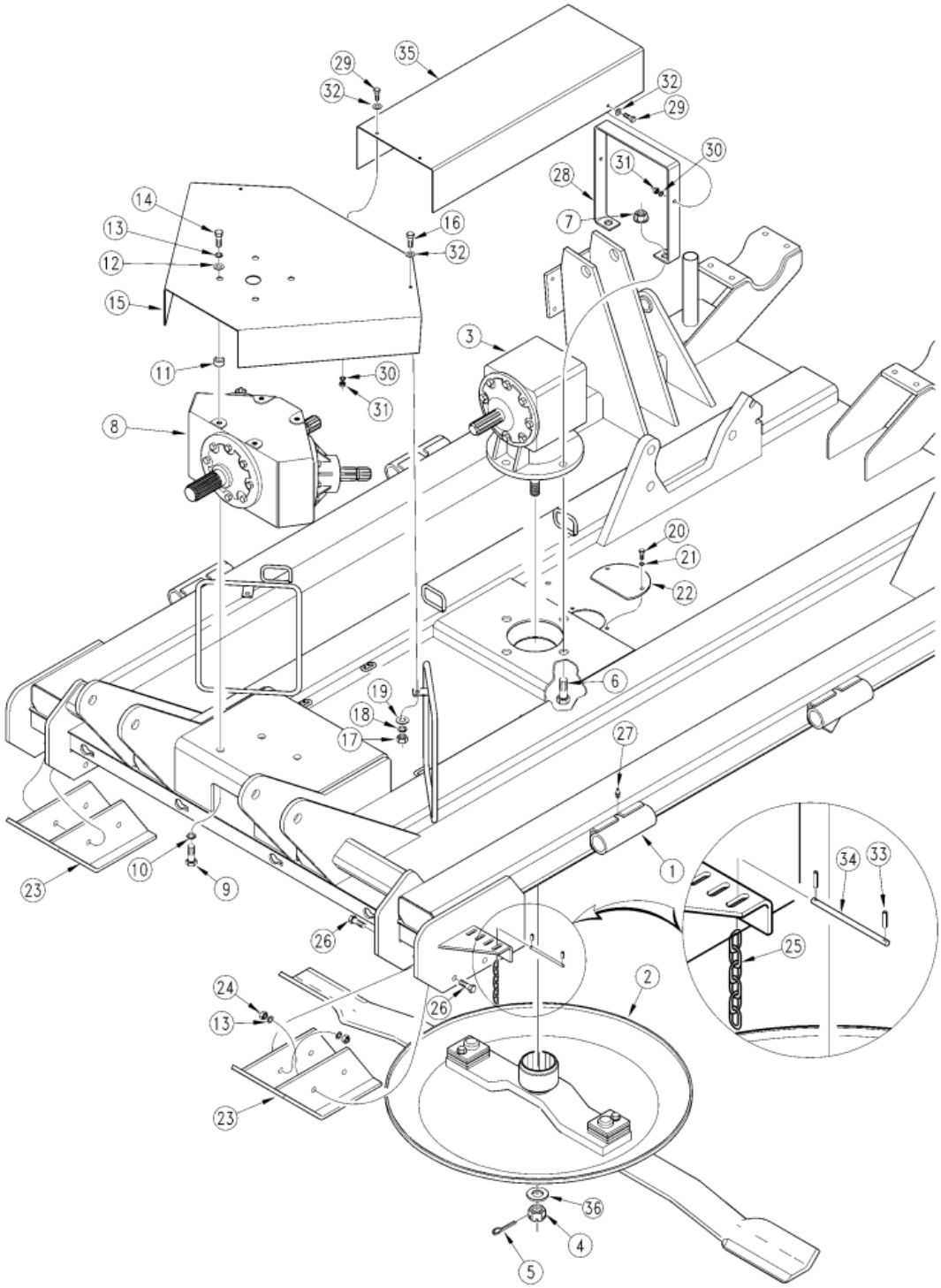

Deck Center (S/N 77360-)

Applies to Models: RCF45180, RCFM45180

Ref.	Part No.	Part Description	Comments
	DWG13170	Drawing Image Number	
1	312-205H	CENTER DECK WELDMENT	
2		SEE BLADE CARRIER FOR COMPONENTS	
3	826-376C	GBOX RC25 1.38-6 1:1.44 STD.	540 RPM Service Only
3	826-035C	RPBY 826-376C	(Obsolete) 540 RPM Service Only
3	826-069C	RPBY 826-035C	Obsolete
3	826-060C	GEARBOX RC71SS 1.21:1 REDUC	1000 RPM Service Only
3	826-074C	RPBY 826-060C	Obsolete
4	803-095C	NUT HEX SLOTTED 1-14	
5	805-017C	PIN COTTER 3/16 X 1 3/4 PLT	Rev. 2
5	805-016C	PIN COTTER 3/16 X 1 1/4 PLT	Rev 1; Use up stock
6	802-066C	HHCS 3/4-10X3 1/2 GR5	
7	803-299C	NUT HEX FLG TOP LK 3/4-10 PLT	
8	826-242C	DIV. BOX RCD101 1.75-20 1:1.15	540 RPM Service Only
8	826-068C	RPBY 826-242C	Obsolete
8	826-253C	DIV.BOX RCD101 1.75-20 1.3:1	1000 RPM Service Only
8	826-072C	RPBY 826-253C	Obsolete
9	802-050C	HHCS 5/8-11X1 1/4 GR5	Rev. 2
9	802-051C	HHCS 5/8-11X1 1/2 GR5	Rev 1; Use up stock
10	804-022C	WASHER LOCK SPRING 5/8 PLT	
11	310-024D	GAUGE WHEEL SPACER - SHORT	Rev. 2
11	312-500D	RPBY 310-024D	(Obsolete) Rev 1; Use up stock
12	804-016C	WASHER FLAT 1/2 SAE PLT	
13	804-015C	WASHER LOCK SPRING 1/2 PLT	
14	802-091C	HHCS 1/2-13X1 1/2 GR5	
15	312-544D	POWER DIVIDER SHIELD	
16	802-017C	HHCS 3/8-16X1 GR5	
17	803-014C	NUT HEX 3/8-16 PLT	
18	804-013C	WASHER LOCK SPRING 3/8 PLT	
19	804-012C	WASHER FLAT 3/8 SAE PLT	
20	802-007C	HHCS 5/16-18X3/4 GR5	
21	804-009C	WASHER LOCK SPRING 5/16 PLT	
22	312-459D	ACCESS COVER - BLADE BOLT	
23	312-218H	FRONT SKID SHOE WELDMENT	
24	803-020C	NUT HEX 1/2-13 PLT	
25	890-175C	CHAIN 5/16 GR 43 X 6 LINKS PLT	
26	802-091C	HHCS 1/2-13X1 1/2 GR5	
27	800-080C	GREASE ZERK 1/4-28 THD FORMING	Rev. 2 not compat. w/Rev. 1
27	800-001C	GREASE ZERK STRAIGHT 1/4-28	Rev. 1
28	312-458D	SUPPORT - WING BOX GUARD	
29	802-004C	HHCS 1/4-20X3/4 GR5	
30	804-006C	WASHER LOCK SPRING 1/4 PLT	
31	803-006C	NUT HEX 1/4-20 PLT	
32	804-007C	WASHER FLAT 1/4 SAE PLT	
33	805-136C	PIN ROLL 1/8 X 1 1/4 LG. PLT	
34	312-509D	CHAIN HANGER ROD CTR FWD	
35	312-098D	GUARD - CENTER GEARBOX	
36	804-070C	FLAT WASHER 1 SPECIAL	

Deck Center (S/N 77361 to 119280)

Applies to Models: RCF45180, RCFM45180

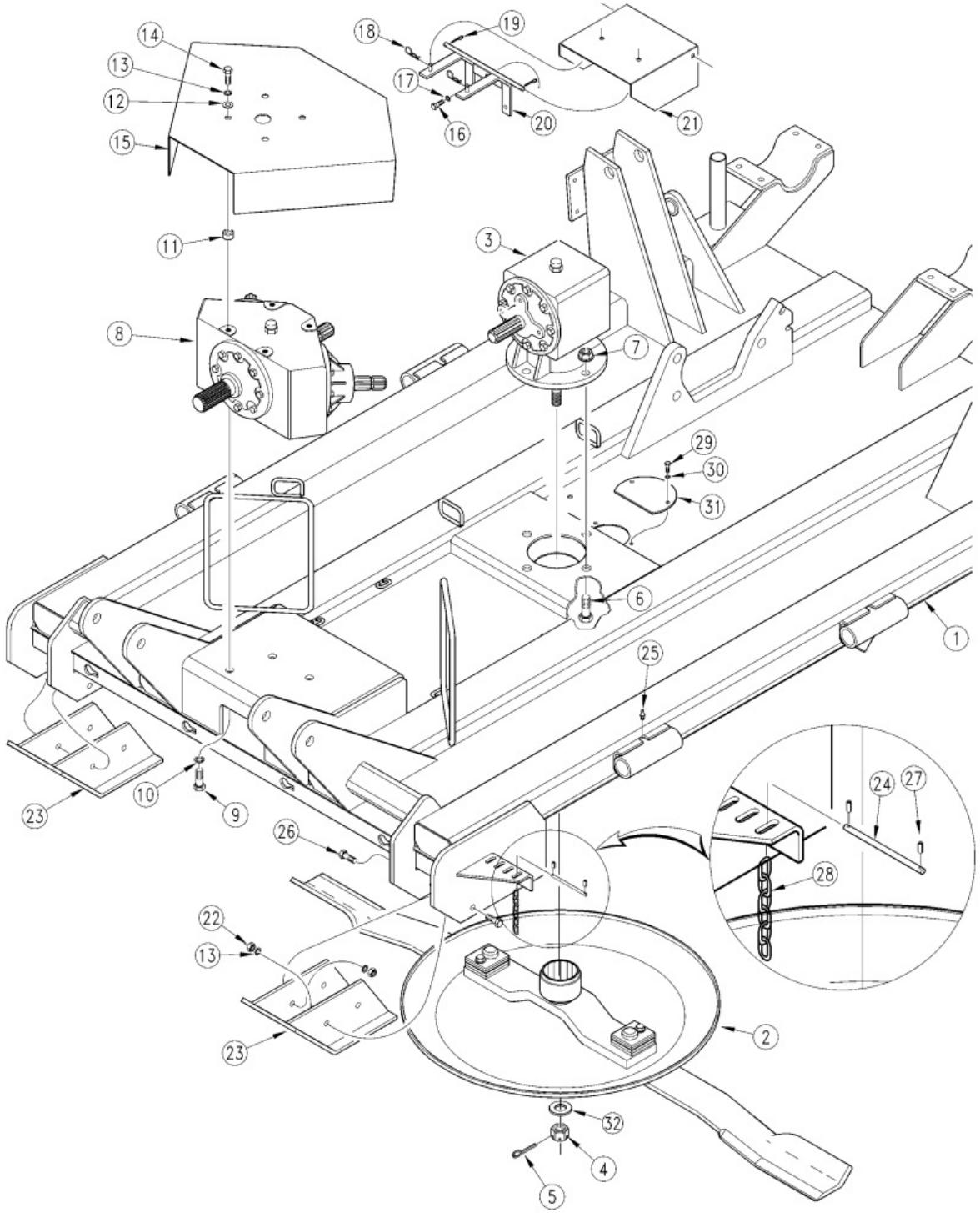

Deck Center (S/N 77361 to 119280)

Applies to Models: RCF45180, RCFM45180

Ref.	Part No.	Part Description	Comments
	DWG11028	Drawing Image Number	
1	312-205H	CENTER DECK WELDMENT	
2		SEE BLADE CARRIER FOR COMPONENTS	
3	826-376C	GBOX RC25 1.38-6 1:1.44 STD.	540 RPM Service Only
3	826-035C	RPBY 826-376C	(Obsolete) 540 RPM Service Only
3	826-069C	RPBY 826-035C	Obsolete
3	826-060C	GEARBOX RC71SS 1.21:1 REDUC	1000 RPM Service Only
3	826-074C	RPBY 826-060C	Obsolete
4	803-095C	NUT HEX SLOTTED 1-14	
5	805-017C	PIN COTTER 3/16 X 1 3/4 PLT	
6	802-066C	HHCS 3/4-10X3 1/2 GR5	
7	803-299C	NUT HEX FLG TOP LK 3/4-10 PLT	
8	826-242C	DIV. BOX RCD101 1.75-20 1:1.15	540 RPM Service Only
8	826-068C	RPBY 826-242C	Obsolete
8	826-253C	DIV.BOX RCD101 1.75-20 1.3:1	1000 RPM Service Only
8	826-072C	RPBY 826-253C	Obsolete
9	802-050C	HHCS 5/8-11X1 1/4 GR5	
10	804-022C	WASHER LOCK SPRING 5/8 PLT	
11	310-024D	GAUGE WHEEL SPACER - SHORT	Rev. 2
11	312-500D	RPBY 310-024D	(Obsolete) Rev 1; Use up stock
12	804-016C	WASHER FLAT 1/2 SAE PLT	
13	804-015C	WASHER LOCK SPRING 1/2 PLT	
14	802-091C	HHCS 1/2-13X1 1/2 GR5	
15	312-544D	POWER DIVIDER SHIELD	
16	802-017C	HHCS 3/8-16X1 GR5	
17	804-013C	WASHER LOCK SPRING 3/8 PLT	
18	805-010C	PIN HAIR COTTER .094	
19	805-069C	PIN COTTER 3/16 X 1	
20	312-334H	GEARBOX SHIELD SUPPORT WELDMT	
21	312-540D	GEARBOX SHIELD	
22	803-020C	NUT HEX 1/2-13 PLT	
23	312-218H	FRONT SKID SHOE WELDMENT	
24	312-509D	CHAIN HANGER ROD CTR FWD	
25	800-080C	GREASE ZERK 1/4-28 THD FORMING	
26	802-091C	HHCS 1/2-13X1 1/2 GR5	
27	805-136C	PIN ROLL 1/8 X 1 1/4 LG. PLT	
28	890-175C	CHAIN 5/16 GR 43 X 6 LINKS PLT	
29	802-007C	HHCS 5/16-18X3/4 GR5	
30	804-009C	WASHER LOCK SPRING 5/16 PLT	
31	312-459D	ACCESS COVER - BLADE BOLT	
32	804-070C	FLAT WASHER 1 SPECIAL	

Deck Center (S/N 119281 to 160142)

Applies to Models: RCF45180, RCFM45180

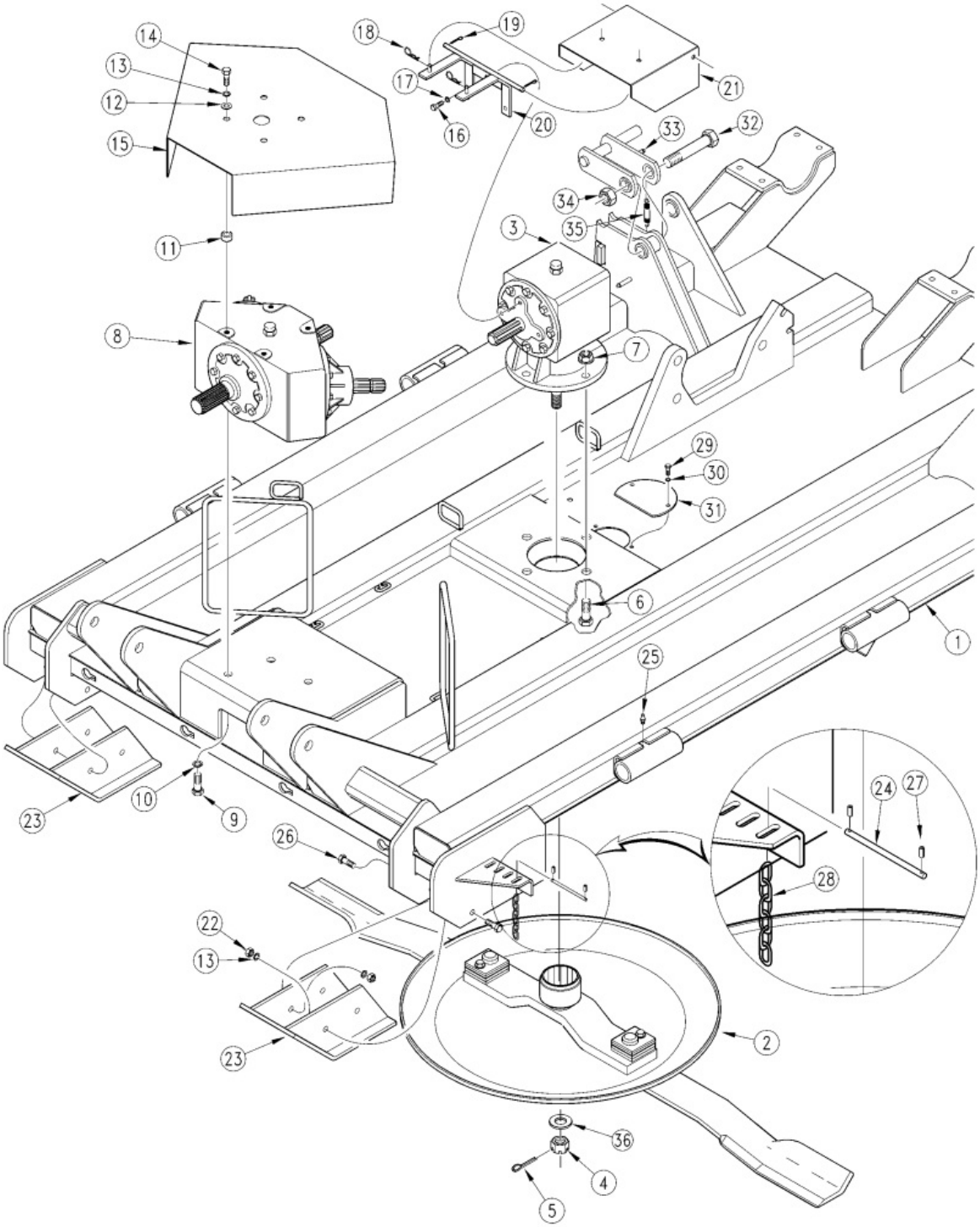

Deck Center (S/N 119281 to 160142)

Applies to Models: RCF45180, RCFM45180

Ref.	Part No.	Part Description	Comments
	DWG13164	Drawing Image Number	
1	312-205H	CENTER DECK WELDMENT	
2		SEE BLADE CARRIER FOR COMPONENTS	
3	826-376C	GBOX RC25 1.38-6 1:1.44 STD.	540 RPM Service Only
3	826-035C	RPBY 826-376C	(Obsolete) 540 RPM Service Only
3	826-069C	RPBY 826-035C	Obsolete
3	826-060C	GEARBOX RC71SS 1.21:1 REDUC	1000 RPM Service Only
3	826-074C	RPBY 826-060C	Obsolete
4	803-095C	NUT HEX SLOTTED 1-14	
5	805-017C	PIN COTTER 3/16 X 1 3/4 PLT	
6	802-066C	HHCS 3/4-10X3 1/2 GR5	
7	803-299C	NUT HEX FLG TOP LK 3/4-10 PLT	
8	826-242C	DIV. BOX RCD101 1.75-20 1:1.15	540 RPM Service Only
8	826-068C	RPBY 826-242C	Obsolete
8	826-253C	DIV.BOX RCD101 1.75-20 1.3:1	1000 RPM Service Only
8	826-072C	RPBY 826-253C	Obsolete
9	802-050C	HHCS 5/8-11X1 1/4 GR5	
10	804-022C	WASHER LOCK SPRING 5/8 PLT	
11	310-024D	GAUGE WHEEL SPACER - SHORT	
12	804-016C	WASHER FLAT 1/2 SAE PLT	
13	804-015C	WASHER LOCK SPRING 1/2 PLT	
14	802-091C	HHCS 1/2-13X1 1/2 GR5	
15	312-544D	POWER DIVIDER SHIELD	
16	802-017C	HHCS 3/8-16X1 GR5	
17	804-013C	WASHER LOCK SPRING 3/8 PLT	
18	805-010C	PIN HAIR COTTER .094	
19	805-067C	PIN COTTER 1/8 X 3/4	
20	312-334H	GEARBOX SHIELD SUPPORT WELDMT	
21	312-540D	GEARBOX SHIELD	
22	803-020C	NUT HEX 1/2-13 PLT	
23	312-218H	FRONT SKID SHOE WELDMENT	
24	312-509D	CHAIN HANGER ROD CTR FWD	
25	800-080C	GREASE ZERK 1/4-28 THD FORMING	
26	802-091C	HHCS 1/2-13X1 1/2 GR5	
27	805-136C	PIN ROLL 1/8 X 1 1/4 LG. PLT	
28	890-175C	CHAIN 5/16 GR 43 X 6 LINKS PLT	
28	890-400C	CHAIN WELD 5/16 GR 43 X 4 LINK	
29	802-007C	HHCS 5/16-18X3/4 GR5	
30	804-009C	WASHER LOCK SPRING 5/16 PLT	
31	312-459D	ACCESS COVER - BLADE BOLT	
32	802-235C	HHCS 1-8X5 GR5	(S/N 119,281+)
33	312-372H	WING LOCK W/HANDLE WELDMENT	(S/N 119281+)
34	803-038C	NUT HEX 1-8 NYLON INSERT PLT	(S/N 119281+)
35	807-026C	PIVOT STOP SPRING	(S/N 119281+)
36	804-070C	FLAT WASHER 1 SPECIAL	

Deck Center (S/N 160143+)

Applies to Models: RCF45180, RCFM45180

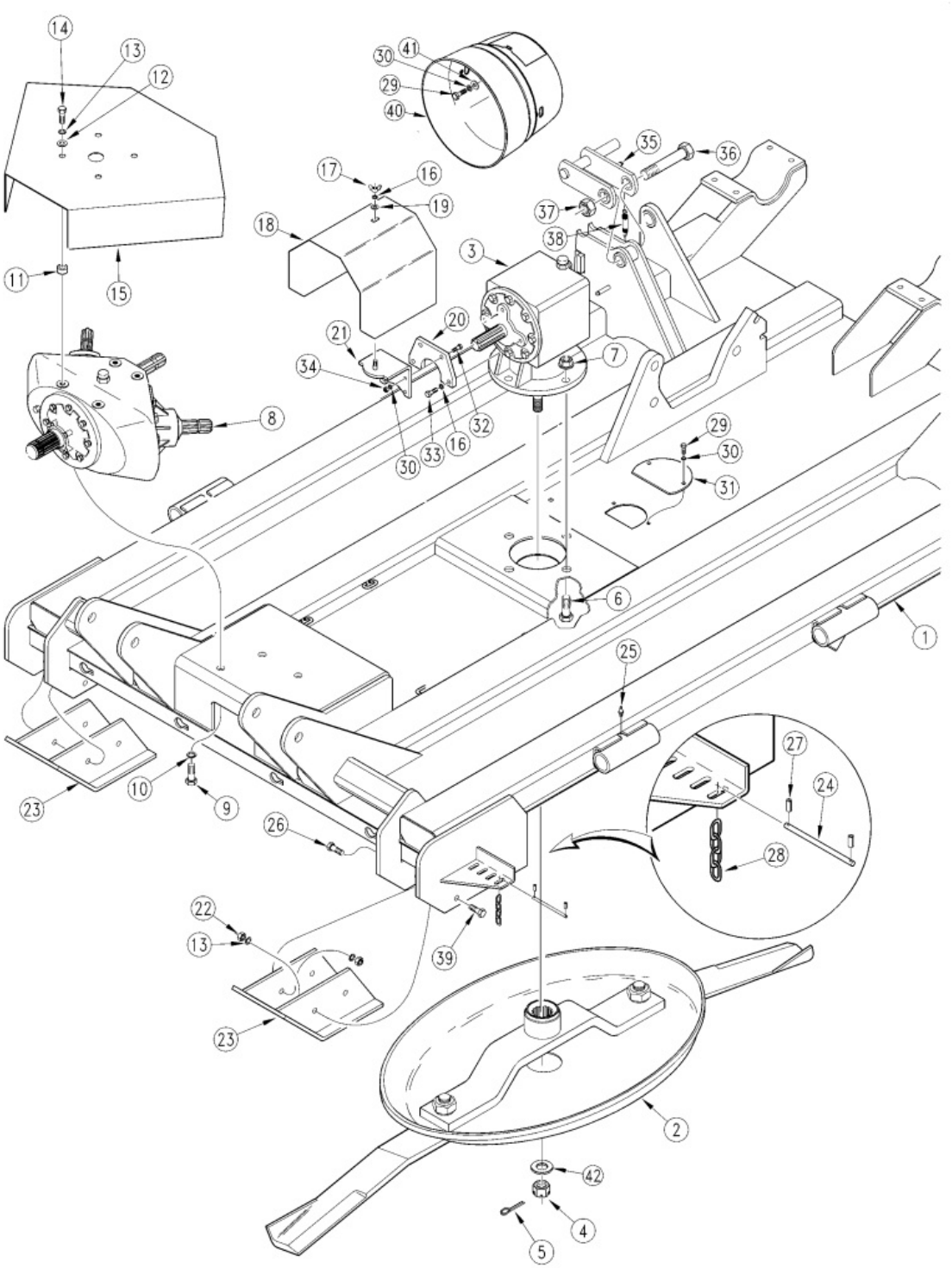

Deck Center (S/N 160143+)

Applies to Models: RCF45180, RCFM45180

Ref.	Part No.	Part Description	Comments
	DWG14087	Drawing Image Number	
1	312-205H	CENTER DECK WELDMENT	
2		SEE BLADE CARRIER FOR COMPONENTS	
3	826-376C	GBOX RC25 1.38-6 1:1.44 STD.	540 RPM Service Only
3	826-035C	RPBY 826-376C	(Obsolete) 540 RPM Service Only
3	826-069C	RPBY 826-035C	Obsolete
3	826-060C	GEARBOX RC71SS 1.21:1 REDUC	1000 RPM Service Only
3	826-074C	RPBY 826-060C	Obsolete
4	803-095C	NUT HEX SLOTTED 1-14	
5	805-017C	PIN COTTER 3/16 X 1 3/4 PLT	
6	802-066C	HHCS 3/4-10X3 1/2 GR5	
7	803-299C	NUT HEX FLG TOP LK 3/4-10 PLT	
8	826-242C	DIV. BOX RCD101 1.75-20 1:1.15	540 RPM Service Only
8	826-068C	RPBY 826-242C	Obsolete
8	826-253C	DIV.BOX RCD101 1.75-20 1.3:1	1000 RPM Service Only
8	826-072C	RPBY 826-253C	Obsolete
9	802-050C	HHCS 5/8-11X1 1/4 GR5	
10	804-022C	WASHER LOCK SPRING 5/8 PLT	
11	310-024D	GAUGE WHEEL SPACER - SHORT	
12	804-016C	WASHER FLAT 1/2 SAE PLT	
13	804-015C	WASHER LOCK SPRING 1/2 PLT	
14	802-091C	HHCS 1/2-13X1 1/2 GR5	
15	312-544D	POWER DIVIDER SHIELD	
16	804-013C	WASHER LOCK SPRING 3/8 PLT	
17	803-231C	NUT WING 3/8-16 PLT	
18	312-399H	SHIELD WELDMENT	Used on ITG gearboxes only
19	804-012C	WASHER FLAT 3/8 SAE PLT	
20	312-633D	GEARBOX SHIELD MOUNT BRACKET	
21	312-400H	SHIELD MOUNT BRACKET WELDMENT	
22	803-020C	NUT HEX 1/2-13 PLT	
23	312-218H	FRONT SKID SHOE WELDMENT	
24	312-509D	CHAIN HANGER ROD CTR FWD	
25	800-080C	GREASE ZERK 1/4-28 THD FORMING	
26	802-091C	HHCS 1/2-13X1 1/2 GR5	
27	805-136C	PIN ROLL 1/8 X 1 1/4 LG. PLT	
28	890-400C	CHAIN WELD 5/16 GR 43 X 4 LINK	
29	802-007C	HHCS 5/16-18X3/4 GR5	
30	804-009C	WASHER LOCK SPRING 5/16 PLT	
31	312-459D	ACCESS COVER - BLADE BOLT	
32	802-159C	HHCS 5/16-18X1 GR5	
33	802-017C	HHCS 3/8-16X1 GR5	
34	802-159C	HHCS 5/16-18X1 GR5	
35	312-372H	WING LOCK W/HANDLE WELDMENT	
36	802-235C	HHCS 1-8X5 GR5	
37	803-038C	NUT HEX 1-8 NYLON INSERT PLT	
38	807-026C	PIVOT STOP SPRING	
39	802-091C	HHCS 1/2-13X1 1/2 GR5	
40	826-648C	LARGE SHAFT CONE W ACCESS DOOR	
40	826-222C	RPBY 826-648C	(Obsolete) Used on OMNI gearboxes only
41	804-036C	WASHER FLAT 5/16 SAE PLT	

This Page Intentionally Left Blank

Deck Center (S/N 160143+)

Ref.	Part No.	Part Description	Comments
42	804-070C	FLAT WASHER 1 SPECIAL	

Deck Center (S/N 160143+) Continued

Applies to Models: RCF45180, RCFM45180

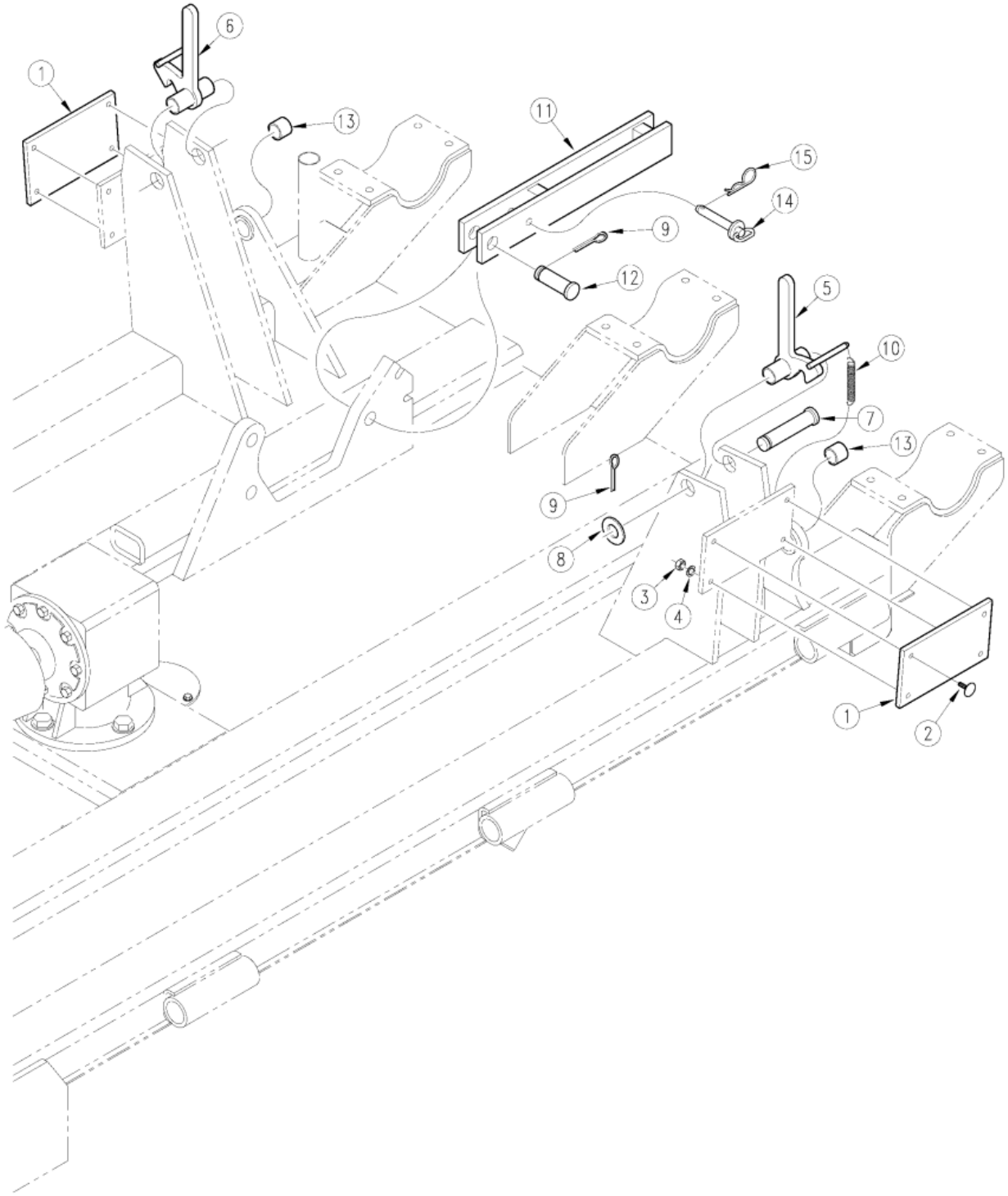

Deck Center (S/N 160143+) Continued

Applies to Models: RCF45180, RCFM45180

Ref.	Part No.	Part Description	Comments
	DWG11029	Drawing Image Number	
1	816-123C	WING STOP RUBBER	(S/N 119280-)
2	802-342C	ELEVATOR 1/4-20X1	(S/N 119280-)
3	803-006C	NUT HEX 1/4-20 PLT	(S/N 119280-)
4	804-049C	WASHER LOCK INTERNAL TOOTH 1/4	(S/N 119280-)
5	312-227H	WING LATCH LH	(S/N 119280-)
6	312-228H	WING LATCH RH	(S/N 119280-)
7	805-131C	PIN CLVS 1.0X4.69 USBL	(S/N 119280-)
8	804-029C	WASHER FLAT 1 SAE	(S/N 119280-)
9	805-104C	PIN COTTER 3/16 X 1 1/2 PLT	
10	807-026C	PIVOT STOP SPRING	(S/N 119280-)
11	312-217H	TRANSPORT LINK WELDMENT	
11	312-356H	AIRCRAFT TIRE TRANSPORT LINK	Used Only With 814-086C
12	805-004C	PIN CLVS 1.0X2.75 USBL	
13	890-005C	BUSHING CYL 1 1/4 X 1 X 1	
14	805-002C	PIN HTCH .5X3.50 USBL	
15	805-032C	PIN HAIR COTTER .148 WIRE	

Deck Left & Right Hand (S/N 77361-)

Applies to Models: RCF45180, RCFM45180

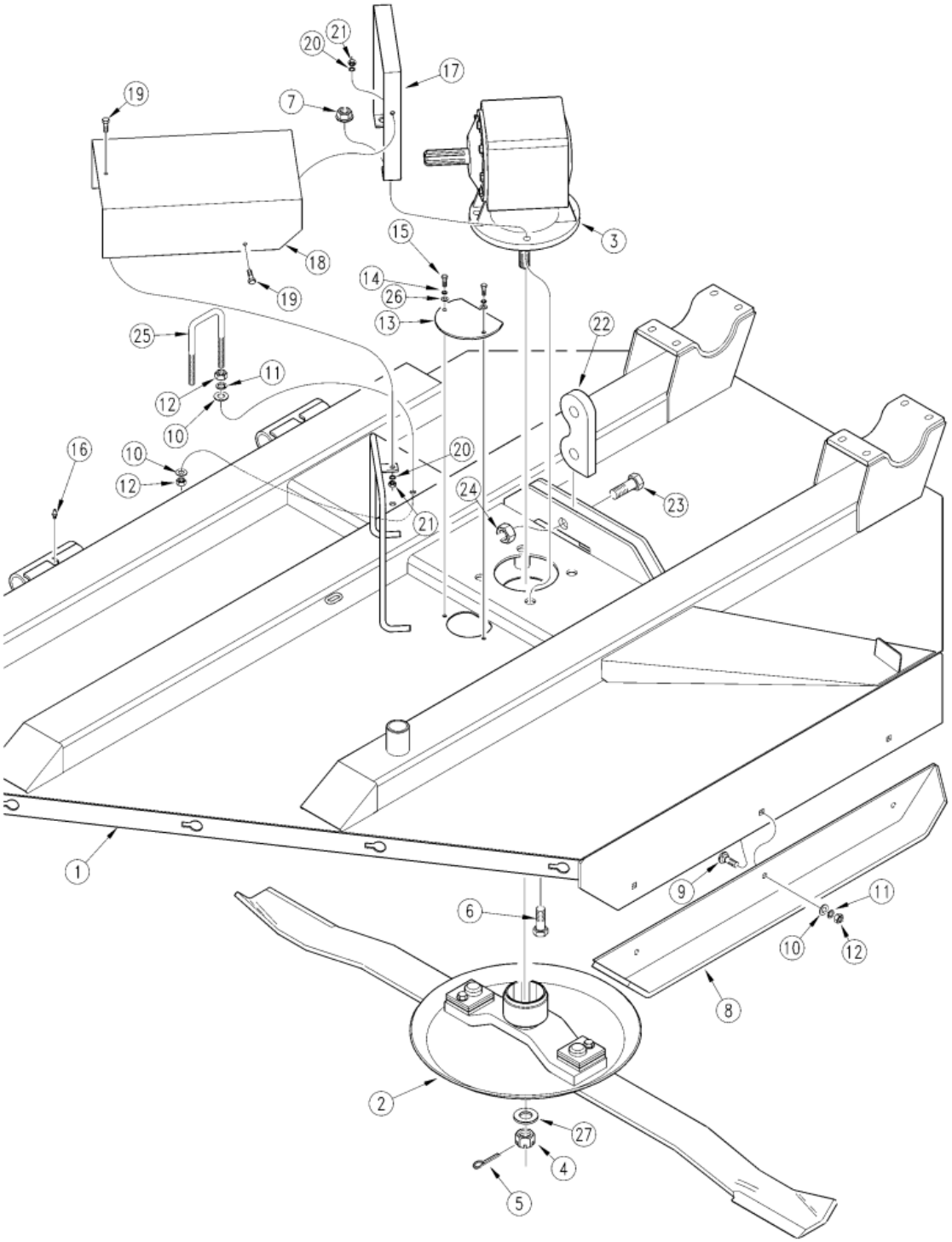

Deck Left & Right Hand (S/N 77361-)

Applies to Models: RCF45180, RCFM45180

Ref.	Part No.	Part Description	Comments
	DWG14315	Drawing Image Number	
1	312-206H	LEFT WING DECK WELDMENT	
1	312-207H	RIGHT WING DECK WELDMENT	
2		SEE BLADE CARRIER FOR COMPONENTS	
3	826-376C	GBOX RC25 1.38-6 1:1.44 STD.	LH Deck 540 RPM Service Only
3	826-035C	RPBY 826-376C	(Obsolete) LH Deck 540 RPM Service Only
3	826-069C	RPBY 826-035C	Obsolete
3	826-241C	GBOX RC71 1-3/8"-6A 1:1.46 CCW	RH Deck 540 RPM Service Only
3	826-070C	RPBY 826-241C	Obsolete
3	826-377C	GBOX RC25 1.38-6 1:1.21 STD.	
3	826-038C	RPBY 826-377C	(Obsolete) LH Deck 1000 RPM Service Only
3	826-073C	RPBY 826-038C	Obsolete
3	826-254C	GBOX RC71 REV. 1:1.21 1 3/8-6	RH Deck 1000 RPM Service Only
3	826-075C	RPBY 826-254C	Obsolete
4	803-095C	NUT HEX SLOTTED 1-14	
5	805-017C	PIN COTTER 3/16 X 1 3/4 PLT	Rev. 2
5	805-016C	PIN COTTER 3/16 X 1 1/4 PLT	(RPBY 805-017C) Rev 1; Use up stock
6	802-066C	HHCS 3/4-10X3 1/2 GR5	
7	803-299C	NUT HEX FLG TOP LK 3/4-10 PLT	
8	312-226H	WING SKID SHOE WELDMENT	
9	802-214C	RHSNB 1/2-13X1 1/4 GR5	
10	804-016C	WASHER FLAT 1/2 SAE PLT	(RPBY 803-169C; Only On Skid Shoe)
11	804-015C	WASHER LOCK SPRING 1/2 PLT	(RPBY 803-169C; Only On Skid Shoe)
12	803-169C	NUT HEX FLG LOCK 1/2-13 PLT	(Rplcs 803-020C, 804-015C & 804-016C; Only On Skid Shoe) Rev. 2
12	803-020C	NUT HEX 1/2-13 PLT	(RPBY 803-169C; Only On Skid Shoe) Rev 1; Use up stock
13	312-459D	ACCESS COVER - BLADE BOLT	
14	804-009C	WASHER LOCK SPRING 5/16 PLT	
15	802-007C	HHCS 5/16-18X3/4 GR5	
16	800-080C	GREASE ZERK 1/4-28 THD FORMING	Rev. 2 not compat. w/Rev. 1
16	800-001C	GREASE ZERK STRAIGHT 1/4-28	Rev. 1
17	312-458D	SUPPORT - WING BOX GUARD	
18	312-455D	GUARD WING BOX	
19	802-004C	HHCS 1/4-20X3/4 GR5	
20	804-007C	WASHER FLAT 1/4 SAE PLT	
21	803-006C	NUT HEX 1/4-20 PLT	
22	312-239D	PIVOT LINK - WING FLOAT	
23	805-145C	PIN CLVS 1.0X1.94 USBL	(Must Be Ordered With 805-104C) Rev. 2 not compat. w/Rev. 1
23	802-181C	HHCS 1-8X4 GR5 FTHD	(RPBY 805-145C) Rev. 1
24	805-104C	PIN COTTER 3/16 X 1 1/2 PLT	(Must Be Ordered With 805-145C) Rev. 2 not compat. w/Rev. 1
24	803-038C	NUT HEX 1-8 NYLON INSERT PLT	(RPBY 805-104C) Rev. 1
25	806-072C	U-BOLT 1/2-13 X 2 X 5 17/32	
26	804-010C	WASHER FLAT 5/16 USS PLT	
27	804-070C	FLAT WASHER 1 SPECIAL	

Deck Left & Right Hand (S/N 77362 to 119280)

Applies to Models: RCF45180, RCFM45180

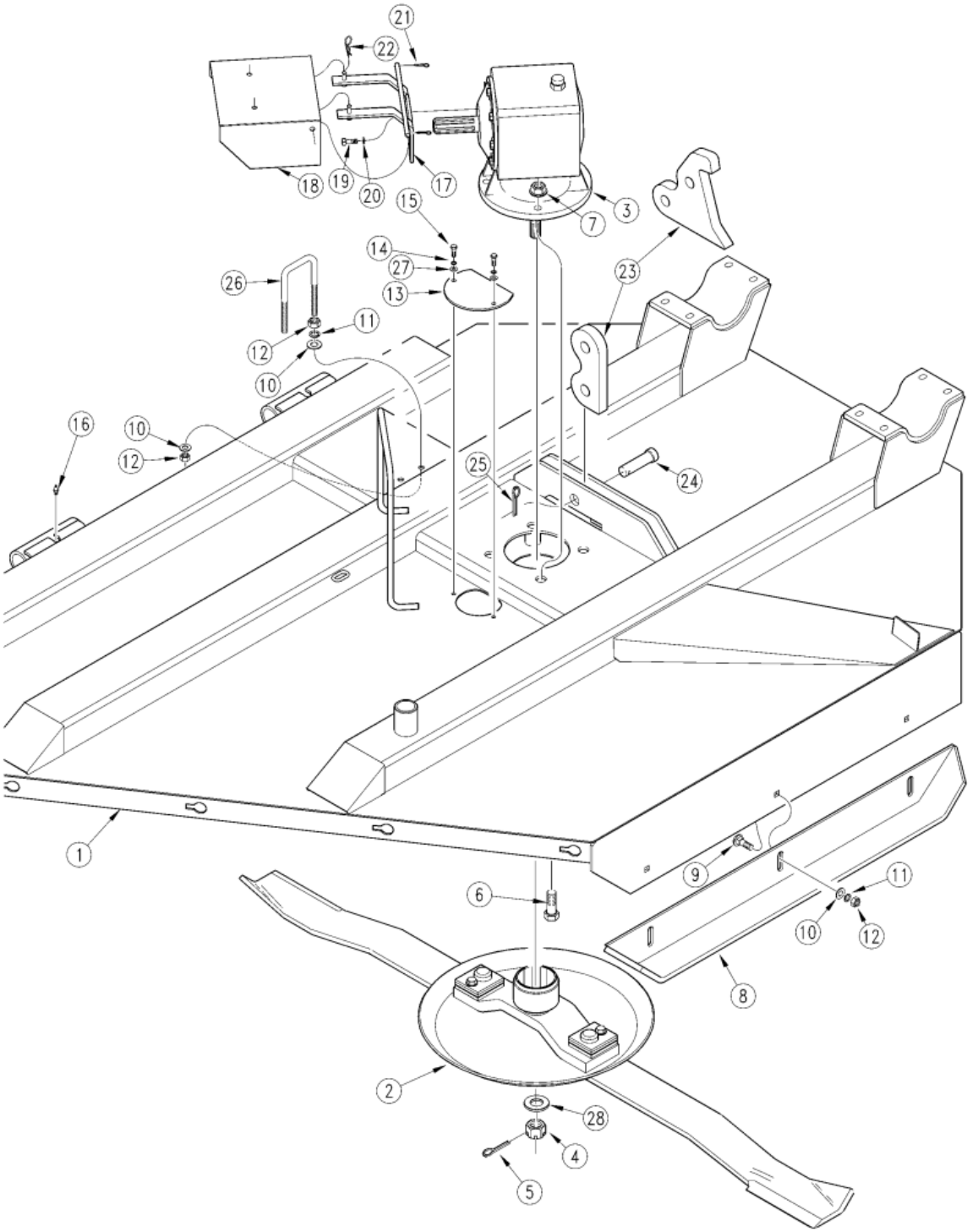

Deck Left & Right Hand (S/N 77362 to 119280)

Applies to Models: RCF45180, RCFM45180

Ref.	Part No.	Part Description	Comments
	DWG14332	Drawing Image Number	
1	312-206H	LEFT WING DECK WELDMENT	
1	312-207H	RIGHT WING DECK WELDMENT	
2		SEE BLADE CARRIER FOR COMPONENTS	
3	826-376C	GBOX RC25 1.38-6 1:1.44 STD.	LH Deck 540 RPM Service Only
3	826-035C	RPBY 826-376C	(Obsolete) LH Deck 540 RPM Service Only
3	826-069C	RPBY 826-035C	Obsolete
3	826-241C	GBOX RC71 1-3/8"-6A 1:1.46 CCW	RH Deck 540 RPM Service Only
3	826-070C	RPBY 826-241C	Obsolete
3	826-377C	GBOX RC25 1.38-6 1:1.21 STD.	
3	826-038C	RPBY 826-377C	(Obsolete) LH Deck 1000 RPM Service Only
3	826-073C	RPBY 826-038C	Obsolete
3	826-254C	GBOX RC71 REV. 1:1.21 1 3/8-6	RH Deck 1000 RPM Service Only
3	826-075C	RPBY 826-254C	Obsolete
4	803-095C	NUT HEX SLOTTED 1-14	
5	805-017C	PIN COTTER 3/16 X 1 3/4 PLT	
6	802-066C	HHCS 3/4-10X3 1/2 GR5	
7	803-299C	NUT HEX FLG TOP LK 3/4-10 PLT	
8	312-226H	WING SKID SHOE WELDMENT	
9	802-214C	RHSNB 1/2-13X1 1/4 GR5	
10	804-016C	WASHER FLAT 1/2 SAE PLT	(RPBY 803-169C; Only On Skid Shoe) Use up stock
11	804-015C	WASHER LOCK SPRING 1/2 PLT	(RPBY 803-169C; Only On Skid Shoe) Use up stock
12	803-169C	NUT HEX FLG LOCK 1/2-13 PLT	(Rplcs 803-020C, 804-015C & 804-016C; Only On Skid Shoe) Rev. 2
12	803-020C	NUT HEX 1/2-13 PLT	(RPBY 803-169C; Only On Skid Shoe) Rev 1; Use up stock
13	312-459D	ACCESS COVER - BLADE BOLT	
14	804-009C	WASHER LOCK SPRING 5/16 PLT	
15	802-007C	HHCS 5/16-18X3/4 GR5	
16	800-080C	GREASE ZERK 1/4-28 THD FORMING	
17	312-334H	GEARBOX SHIELD SUPPORT WELDMT	
18	312-540D	GEARBOX SHIELD	
19	802-017C	HHCS 3/8-16X1 GR5	
20	804-013C	WASHER LOCK SPRING 3/8 PLT	
21	805-069C	PIN COTTER 3/16 X 1	
22	805-010C	PIN HAIR COTTER .094	
23	312-566D	PIVOT LINK - WING FLOAT	(S/N 108058+)
23	312-239D	PIVOT LINK - WING FLOAT	(S/N 108057-)
24	805-145C	PIN CLVS 1.0X1.94 USBL	(Must Be Ordered With 805-104C) Rev. 2 not compat. w/Rev. 1
24	802-181C	HHCS 1-8X4 GR5 FTHD	(RP By 805-145C) Rev. 1
25	805-104C	PIN COTTER 3/16 X 1 1/2 PLT	(Must Be Ordered With 805-145C) Rev. 2 not compat. w/Rev. 1
25	803-038C	NUT HEX 1-8 NYLON INSERT PLT	(RP By 805-104C) Rev. 1
26	806-072C	U-BOLT 1/2-13 X 2 X 5 17/32	
27	804-010C	WASHER FLAT 5/16 USS PLT	
28	804-070C	FLAT WASHER 1 SPECIAL	

Deck Left & Right Hand (S/N 119281 to 160142)

Applies to Models: RCF45180, RCFM45180

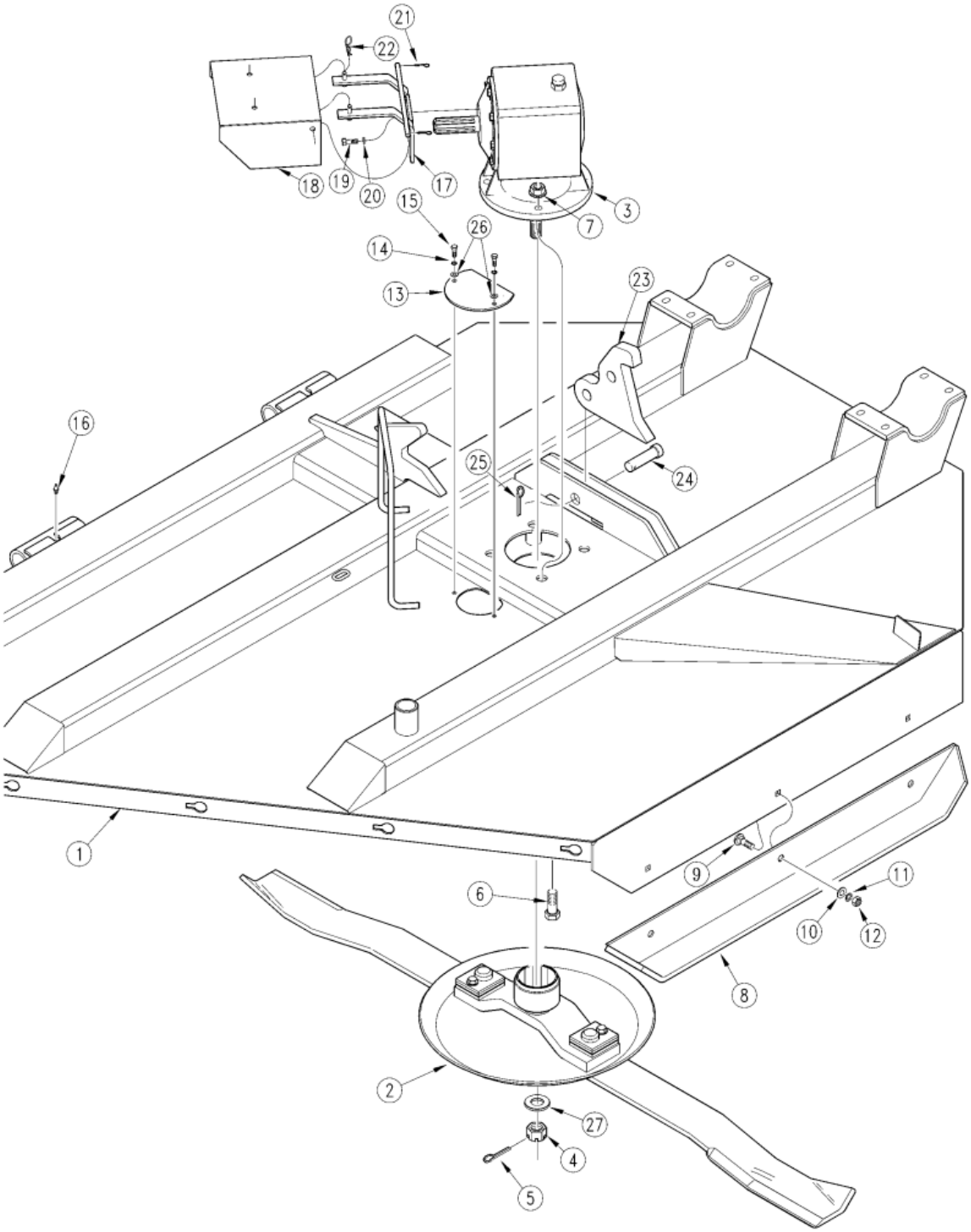

Deck Left & Right Hand (S/N 119281 to 160142)

Applies to Models: RCF45180, RCFM45180

Ref.	Part No.	Part Description	Comments
	DWG11030	Drawing Image Number	
1	312-206H	LEFT WING DECK WELDMENT	
1	312-207H	RIGHT WING DECK WELDMENT	
2		SEE BLADE CARRIER FOR COMPONENTS	
3	826-376C	GBOX RC25 1.38-6 1:1.44 STD.	LH Deck 540 RPM Service Only
3	826-035C	RPBY 826-376C	(Obsolete) LH Deck 540 RPM Service Only
3	826-069C	RPBY 826-035C	Obsolete
3	826-241C	GBOX RC71 1-3/8"-6A 1:1.46 CCW	RH Deck 540 RPM Service Only
3	826-070C	RPBY 826-241C	Obsolete
3	826-377C	GBOX RC25 1.38-6 1:1.21 STD.	
3	826-038C	RPBY 826-377C	(Obsolete) LH Deck 1000 RPM Service Only
3	826-073C	RPBY 826-038C	Obsolete
3	826-254C	GBOX RC71 REV. 1:1.21 1 3/8-6	RH Deck 1000 RPM Service Only
3	826-075C	RPBY 826-254C	Obsolete
4	803-095C	NUT HEX SLOTTED 1-14	
5	805-017C	PIN COTTER 3/16 X 1 3/4 PLT	
6	802-066C	HHCS 3/4-10X3 1/2 GR5	
7	803-299C	NUT HEX FLG TOP LK 3/4-10 PLT	
8	312-226H	WING SKID SHOE WELDMENT	
9	802-214C	RHSNB 1/2-13X1 1/4 GR5	
10	804-016C	WASHER FLAT 1/2 SAE PLT	(RPBY 803-169C) Rev 1; Use up stock
11	804-015C	WASHER LOCK SPRING 1/2 PLT	(RPBY 803-169C) Rev 1; Use up stock
12	803-169C	NUT HEX FLG LOCK 1/2-13 PLT	(Replaces 803-020C, 804-015C & 804-016C) Rev. 2
12	803-020C	NUT HEX 1/2-13 PLT	(RPBY 803-169C) Rev 1; Use up stock
13	312-459D	ACCESS COVER - BLADE BOLT	
14	804-009C	WASHER LOCK SPRING 5/16 PLT	
15	802-007C	HHCS 5/16-18X3/4 GR5	
16	800-080C	GREASE ZERK 1/4-28 THD FORMING	
17	312-334H	GEARBOX SHIELD SUPPORT WELDMT	
18	312-540D	GEARBOX SHIELD	
19	802-017C	HHCS 3/8-16X1 GR5	
20	804-013C	WASHER LOCK SPRING 3/8 PLT	
21	805-067C	PIN COTTER 1/8 X 3/4	
22	805-010C	PIN HAIR COTTER .094	
23	312-566D	PIVOT LINK - WING FLOAT	
24	805-145C	PIN CLVS 1.0X1.94 USBL	
25	805-104C	PIN COTTER 3/16 X 1 1/2 PLT	
26	804-010C	WASHER FLAT 5/16 USS PLT	
27	804-070C	FLAT WASHER 1 SPECIAL	

Deck Left & Right Hand (S/N 160143+)

Applies to Models: RCF45180, RCFM45180

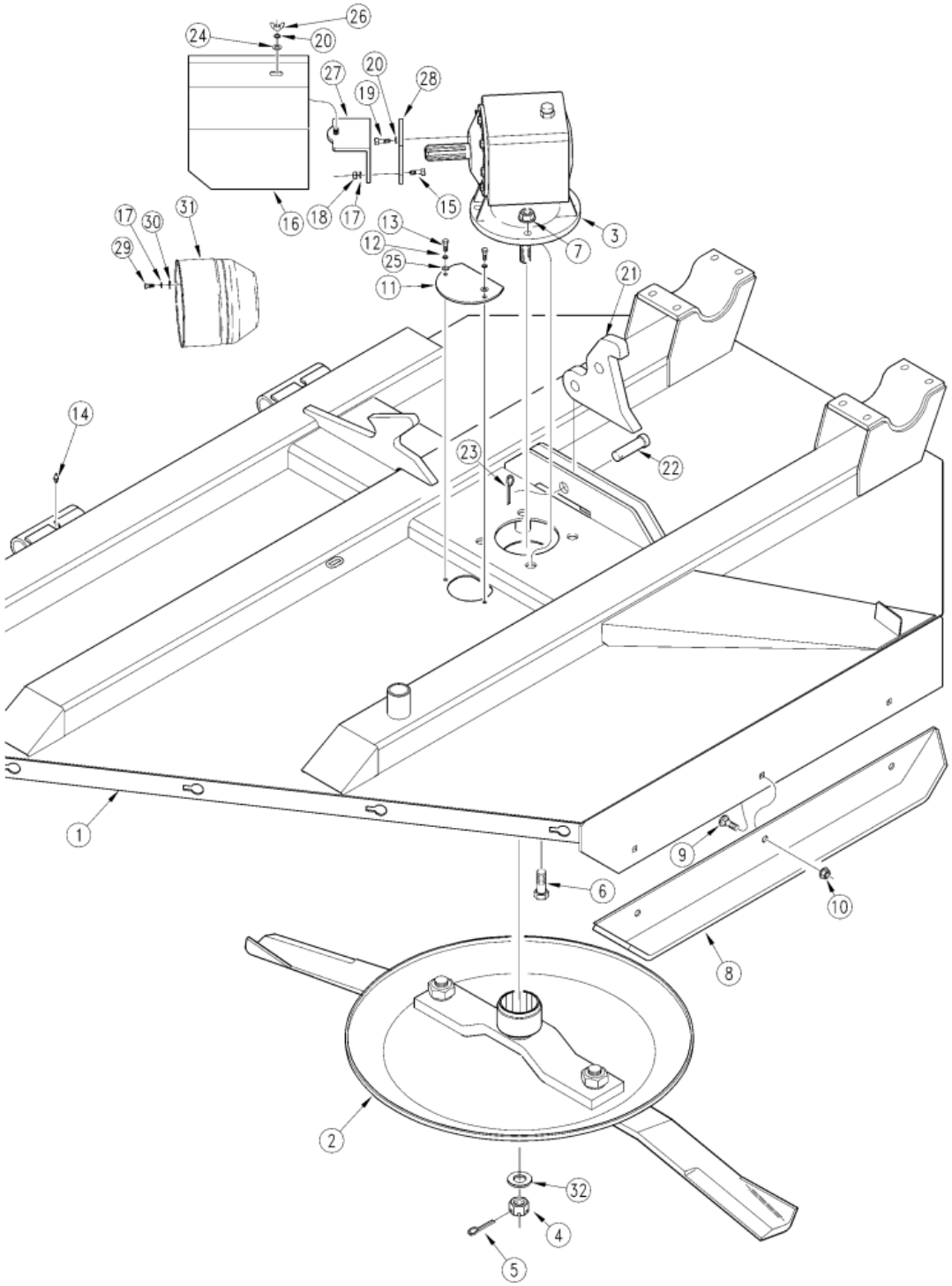

Deck Left & Right Hand (S/N 160143+)

Applies to Models: RCF45180, RCFM45180

Ref.	Part No.	Part Description	Comments
	DWG14089	Drawing Image Number	
1	312-206H	LEFT WING DECK WELDMENT	
1	312-207H	RIGHT WING DECK WELDMENT	
2		SEE BLADE CARRIER FOR COMPONENTS	
3	826-376C	GBOX RC25 1.38-6 1:1.44 STD.	LH Deck 540 RPM Service Only
3	826-035C	RPBY 826-376C	(Obsolete) LH Deck 540 RPM Service Only
3	826-069C	RPBY 826-035C	Obsolete
3	826-241C	GBOX RC71 1-3/8"-6A 1:1.46 CCW	RH Deck 540 RPM Service Only
3	826-070C	RPBY 826-241C	Obsolete
3	826-377C	GBOX RC25 1.38-6 1:1.21 STD.	
3	826-038C	RPBY 826-377C	(Obsolete) LH Deck 1000 RPM Service Only
3	826-073C	RPBY 826-038C	Obsolete
3	826-254C	GBOX RC71 REV. 1:1.21 1 3/8-6	RH Deck 1000 RPM Service Only
3	826-075C	RPBY 826-254C	Obsolete
4	803-095C	NUT HEX SLOTTED 1-14	
5	805-017C	PIN COTTER 3/16 X 1 3/4 PLT	
6	802-066C	HHCS 3/4-10X3 1/2 GR5	
7	803-299C	NUT HEX FLG TOP LK 3/4-10 PLT	
8	312-446H	SKID SHOE REVERSIBLE WELDMENT	
9	802-214C	RHSNB 1/2-13X1 1/4 GR5	
10	803-169C	NUT HEX FLG LOCK 1/2-13 PLT	
11	312-459D	ACCESS COVER - BLADE BOLT	
12	804-009C	WASHER LOCK SPRING 5/16 PLT	
13	802-007C	HHCS 5/16-18X3/4 GR5	
14	800-080C	GREASE ZERK 1/4-28 THD FORMING	
15	802-159C	HHCS 5/16-18X1 GR5	
16	312-399H	SHIELD WELDMENT	
17	804-009C	WASHER LOCK SPRING 5/16 PLT	
18	803-008C	NUT HEX 5/16-18 PLT	
19	802-017C	HHCS 3/8-16X1 GR5	
20	804-013C	WASHER LOCK SPRING 3/8 PLT	
21	312-566D	PIVOT LINK - WING FLOAT	
22	805-145C	PIN CLVS 1.0X1.94 USBL	
23	805-104C	PIN COTTER 3/16 X 1 1/2 PLT	
24	804-012C	WASHER FLAT 3/8 SAE PLT	
25	804-010C	WASHER FLAT 5/16 USS PLT	
26	803-231C	NUT WING 3/8-16 PLT	
27	312-400H	SHIELD MOUNT BRACKET WELDMENT	
28	312-633D	GEARBOX SHIELD MOUNT BRACKET	
29	802-007C	HHCS 5/16-18X3/4 GR5	Replacement shields on OMNI Gearboxes only
30	804-010C	WASHER FLAT 5/16 USS PLT	Replacement shields on OMNI Gearboxes only
31	826-648C	LARGE SHAFT CONE W ACCESS DOOR	
31	826-222C	RPBY 826-648C	(Obsolete) Replacement shields on OMNI Gearboxes only
32	804-070C	FLAT WASHER 1 SPECIAL	

Deck Lift

Applies to Models: RCF45180, RCFM45180

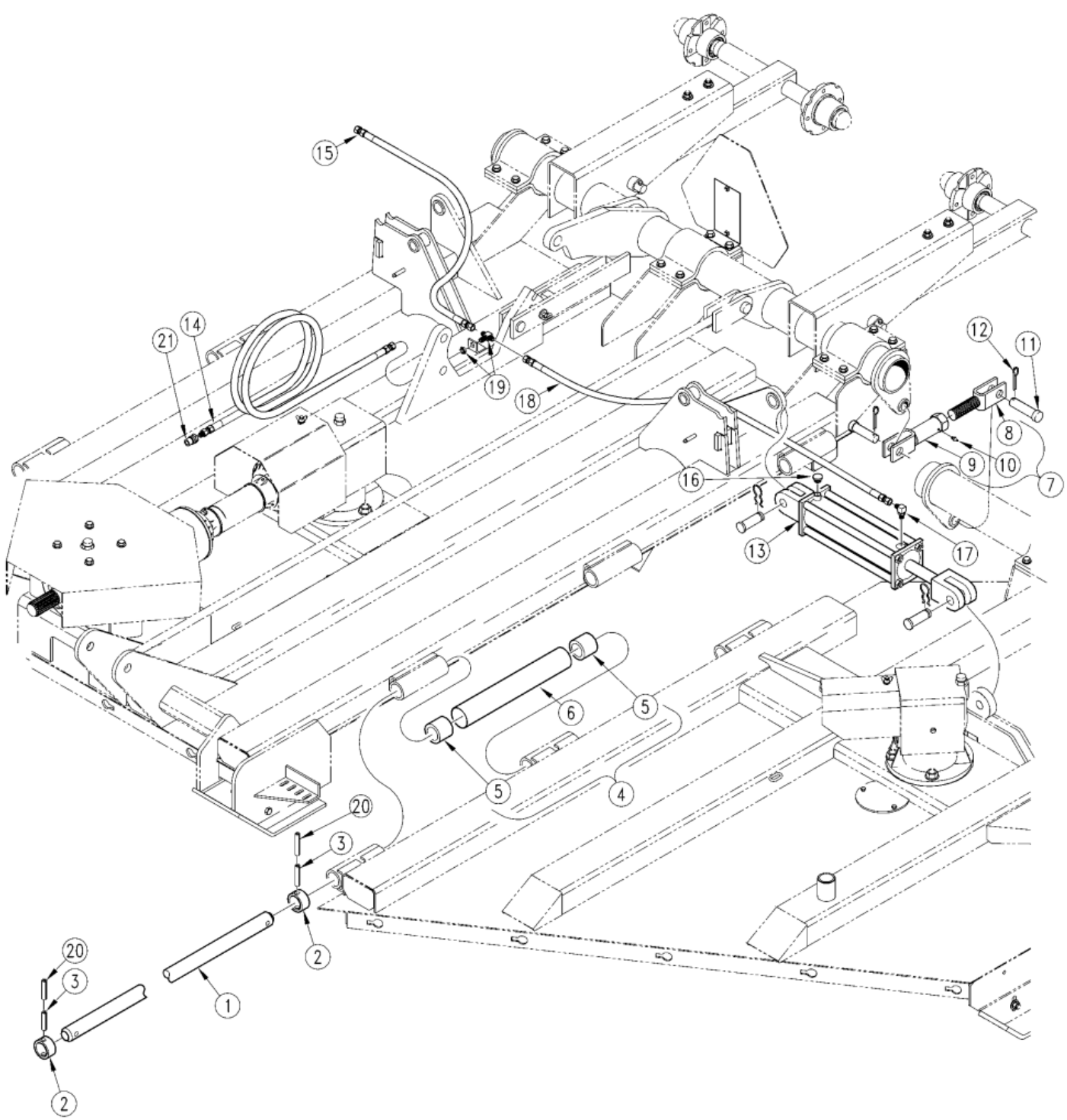

Deck Lift

Applies to Models: RCF45180, RCFM45180

Ref.	Part No.	Part Description	Comments
	DWG 14088	Drawing Image Number	
1	312-447D	HINGE MAIN TUBE	
2	312-446D	HINGE LOCK COLLAR	
3	805-164C	PIN ROLL 1/2 X 2 1/2 LG PLT	
4	312-225V	HINGE COVER TUBE ASSY	
5	816-124C	HINGE COVER TUBE DONUT	
6	312-432D	HINGE COVER TUBE	
7	312-278S	AXLE LINK ASSY	
8	312-224H	AXLE LINK CLEVIS WELDMENT	
9	312-223H	AXLE LINK BODY	
10	800-080C	GREASE ZERK 1/4-28 THD FORMING	Rev. 2 not compat. w/Rev. 1
10	800-001C	GREASE ZERK STRAIGHT 1/4-28	Rev. 1
11	805-137C	PIN CLVS 1.0X1.70 USBL	
12	805-104C	PIN COTTER 3/16 X 1 1/2 PLT	
13	810-150C	CYL 2.5X12X1.25 ROD (TIE ROD)	
14	811-361C	HH1/4R1 186 3/4MORB 9/16FJIC	
15	811-056C	HH1/4R2 045 9/16FJIC	
16	800-117C	VENT PLUG - 9/16-18 PLATED	
17	811-062C	OREL 1/32 9/16MJIC 9/16MORB	
18	811-180C	HH1/4R1 057 9/16FJIC	
19	811-356C	TE 9/16MJIC BH 9/16MJIC 9/16MJ	
20	805-125C	PIN ROLL 5/16 X 2 1/2 PLT	
21	811-394C	CP 3/4FORB MALE QD POPPET TYPE	(S/N 134720+)

Hitch (S/N 74020-)

Applies to Models: RCF45180, RCFM45180

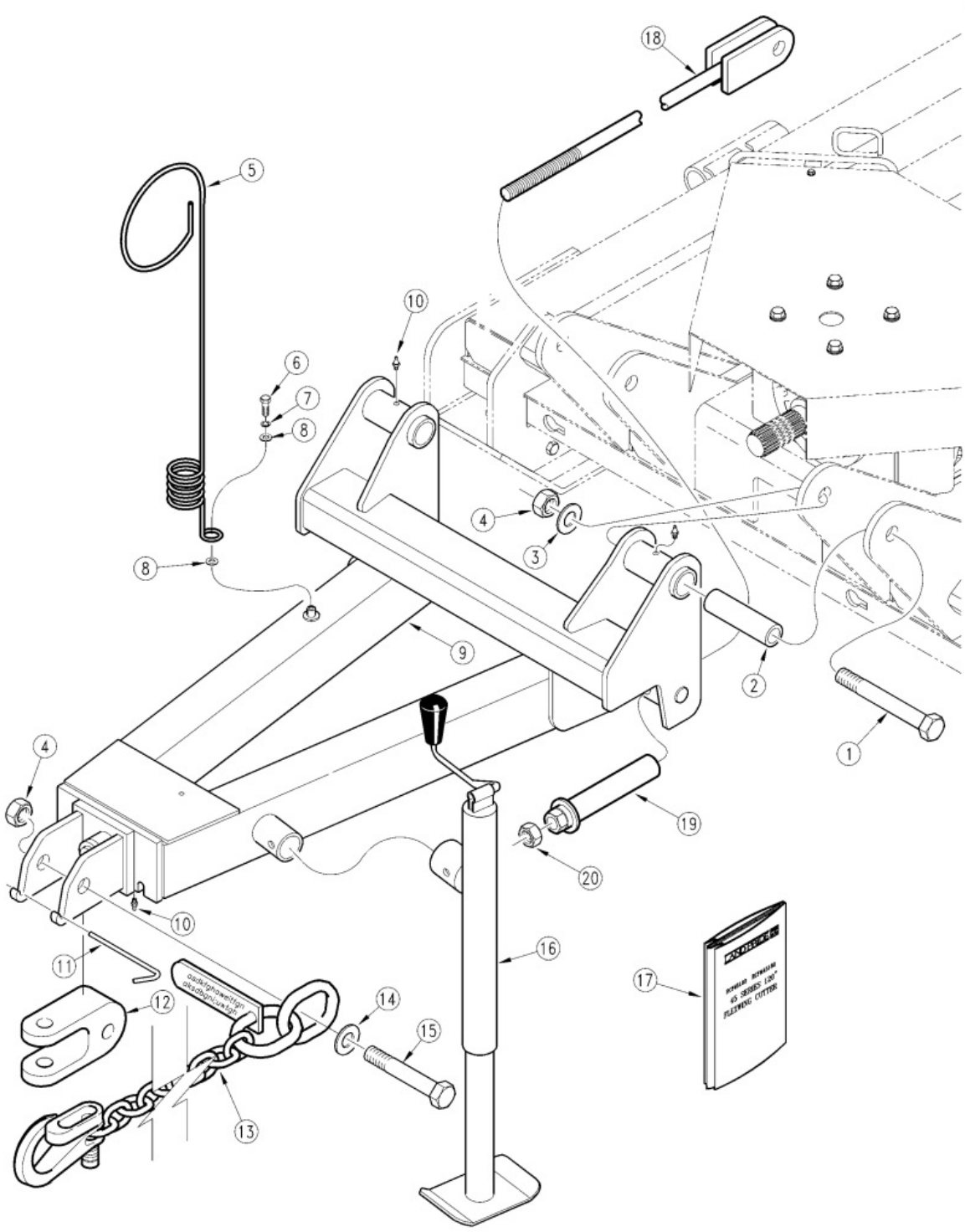

Hitch (S/N 74020-)

Applies to Models: RCF45180, RCFM45180

Ref.	Part No.	Part Description	Comments
	DWG14304	Drawing Image Number	
1	802-076C	HHCS 1-8X8 GR5	
2	312-457D	MAIN HITCH REAR MOUNT BUSHING	
3	804-029C	WASHER FLAT 1 SAE	
4	803-038C	NUT HEX 1-8 NYLON INSERT PLT	
5	807-023C	SPRING HOSE LOOP	
6	802-014C	HHCS 3/8-16X3/4 GR5	
7	804-013C	WASHER LOCK SPRING 3/8 PLT	
8	804-012C	WASHER FLAT 3/8 SAE PLT	
9	312-195H	MAIN HITCH ASSY WELDMENT	
10	800-080C	GREASE ZERK 1/4-28 THD FORMING	Rev. 2 not compat. w/Rev. 1
10	800-001C	GREASE ZERK STRAIGHT 1/4-28	Rev. 1
11	312-210D	CLEVIS SUPPORT PIN	
12	312-155H	HITCH CLEVIS	Rev. 2
12	812-129C	RPBY 312-155H	(Obsolete) Rev 1; Use up stock
13	890-182C	SAFETY CHAIN 10000 LB	
14	804-028C	WASHER FLAT 1 USS PLT	
15	802-074C	HHCS 1-8X6 1/2 GR5	Rev. 2
15	802-205C	HHCS 1-8X5 1/2 GR5	(RPBY 802-074C) Rev 1; Use up stock
16	890-196C	RPBY 890-226C	
17	312-302M	RPBY 312-382M	
18	312-222H	LEVELING ROD WELDMENT	
19	312-221H	LEVELING TUBE WELDMENT	
20	803-049C	NUT HEX 7/8-9 PLT	

Hitch (S/N 74021 to 116033)

Applies to Models: RCF45180, RCFM45180

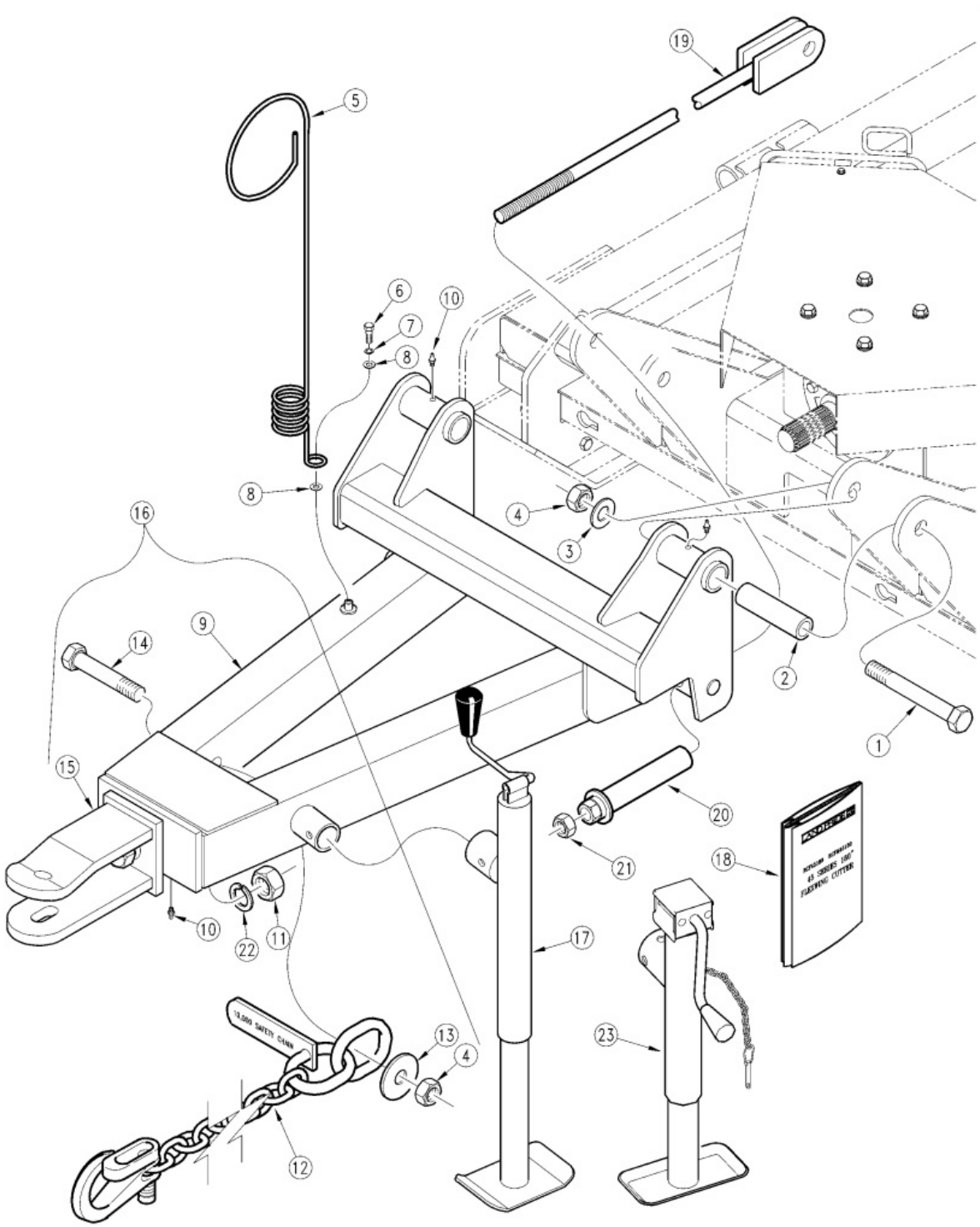

Hitch (S/N 74021 to 116033)

Applies to Models: RCF45180, RCFM45180

Ref.	Part No.	Part Description	Comments
	DWG13163	Drawing Image Number	
1	802-076C	HHCS 1-8X8 GR5	
2	312-457D	MAIN HITCH REAR MOUNT BUSHING	
3	804-029C	WASHER FLAT 1 SAE	
4	803-038C	NUT HEX 1-8 NYLON INSERT PLT	
5	807-023C	SPRING HOSE LOOP	
6	802-014C	HHCS 3/8-16X3/4 GR5	
7	804-013C	WASHER LOCK SPRING 3/8 PLT	
8	804-012C	WASHER FLAT 3/8 SAE PLT	
9	312-194E	MAIN HITCH SUB-WELDMENT	
10	800-080C	GREASE ZERK 1/4-28 THD FORMING	
11	803-081C	NUT HEX 1 1/4-7 NYLON INSERT	
12	890-182C	SAFETY CHAIN 10000 LB	
13	804-028C	WASHER FLAT 1 USS PLT	
14	802-235C	HHCS 1-8X5 GR5	
15	312-332H	CLEVIS SWIVEL WELDMENT	
16	312-281S	HITCH ASSY	
17	890-196C	RPBY 890-226C	(S/N 83280 -)
18	312-302M	RPBY 312-382M	
19	312-222H	LEVELING ROD WELDMENT	
20	312-221H	LEVELING TUBE WELDMENT	
21	803-049C	NUT HEX 7/8-9 PLT	
22	804-039C	WASHER FLAT 1 1/4 SAE PLT	
23	890-246C	SCREW JACK 5000# 15-30 SD-WND	(S/N 83281+)

Hitch (S/N 116034+)

Applies to Models: RCF45180, RCFM45180

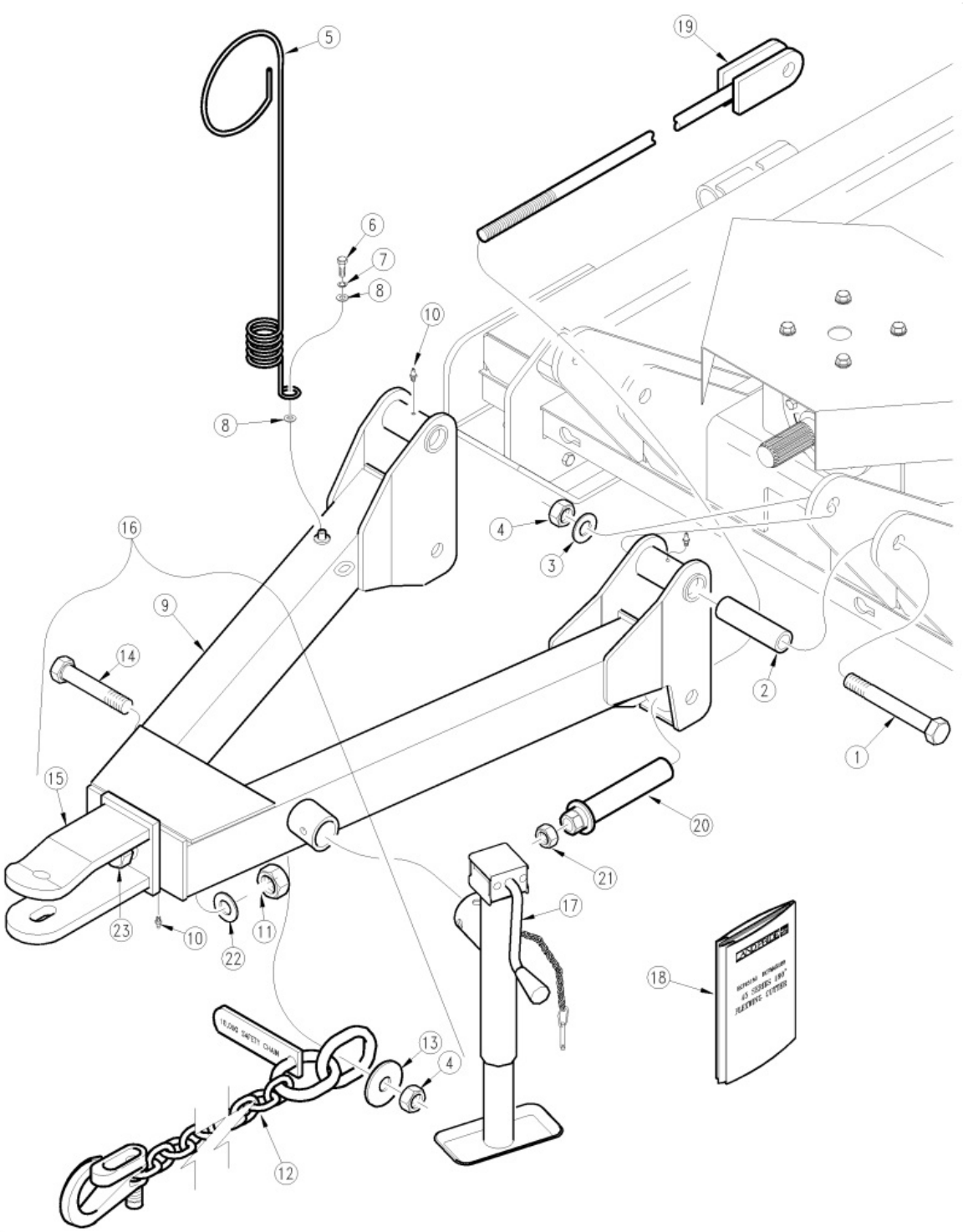

Hitch (S/N 116034+)

Applies to Models: RCF45180, RCFM45180

Ref.	Part No.	Part Description	Comments
	DWG11033	Drawing Image Number	
1	802-076C	HHCS 1-8X8 GR5	
2	312-457D	MAIN HITCH REAR MOUNT BUSHING	
3	804-029C	WASHER FLAT 1 SAE	
4	803-038C	NUT HEX 1-8 NYLON INSERT PLT	
5	807-023C	SPRING HOSE LOOP	
6	802-014C	HHCS 3/8-16X3/4 GR5	
7	804-013C	WASHER LOCK SPRING 3/8 PLT	
8	804-012C	WASHER FLAT 3/8 SAE PLT	
9	312-194E	MAIN HITCH SUB-WELDMENT	
10	800-080C	GREASE ZERK 1/4-28 THD FORMING	
11	803-081C	NUT HEX 1 1/4-7 NYLON INSERT	
12	890-182C	SAFETY CHAIN 10000 LB	
13	804-028C	WASHER FLAT 1 USS PLT	
14	802-235C	HHCS 1-8X5 GR5	
15	312-332H	CLEVIS SWIVEL WELDMENT	
16	312-281S	HITCH ASSY	
17	890-246C	SCREW JACK 5000# 15-30 SD-WND	
18	312-302M	RPBY 312-382M	
19	312-222H	LEVELING ROD WELDMENT	
20	312-221H	LEVELING TUBE WELDMENT	
21	803-049C	NUT HEX 7/8-9 PLT	
22	804-039C	WASHER FLAT 1 1/4 SAE PLT	
23	802-361C	HHCS 1 1/4-7X6 1/2 GR8 NP	

Axle Center

Applies to Models: RCF45180, RCFM45180

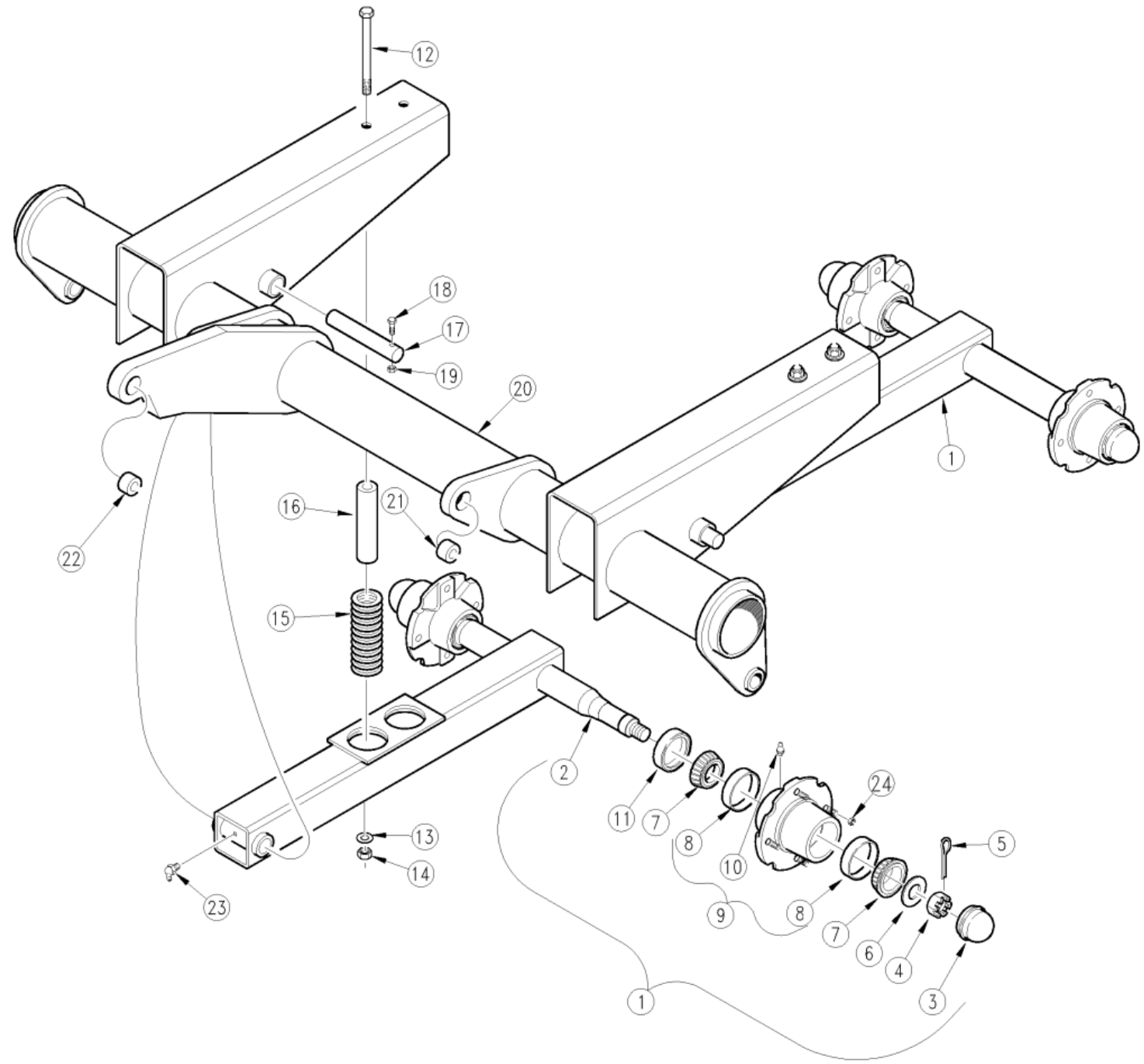

Axle Center

Applies to Models: RCF45180, RCFM45180

Ref.	Part No.	Part Description	Comments
	DWG13189	Drawing Image Number	
1	312-252V	CENT AXLE HUB & SPDLE ASSY RH	
1	312-346V	CENT AXLE HUB & SPDLE ASSY LH	(S/N 79764+)
2	312-212H	DUAL AXLE TUBE WELDMENT	312-212H & 312-345H changed from a 3" tube to a 3 1/2" tube (S/N 113871+)
2	312-345H	DUAL AXLE TUBE WELDMENT LH	(S/N 79764+) 312-212H & 312-345H changed from a 3" tube to a 3 1/2" tube (S/N 113871+)
3	200-001D	HUB GREASE CAP	
4	803-029C	NUT HEX SLOTTED 7/8-14 PLT	
5	805-016C	PIN COTTER 3/16 X 1 1/4 PLT	
6	804-055C	WASHER SPINDLE - 7/8	
7	822-091C	BRG 1.25ID CONE 15123	
8	822-092C	BRG CUP 2.44OD 15245	
9	815-230C	HUB 4 BLT W/CUPS, ZERK & STUDS	
10	800-001C	GREASE ZERK STRAIGHT 1/4-28	
11	816-098C	SEAL 1 3/8 ID X 2.441 OD X.313	
12	802-269C	HHCS 1/2-13X9 GR5	Rev. 2
12	802-154C	HHCS 1/2-13X8 1/2 GR5	(RPBY802-269C) Rev 1; Use up stock
13	804-016C	WASHER FLAT 1/2 SAE PLT	
14	803-147C	NUT HEX NYLOCK 1/2-13	
15	807-006C	SPRING COULTER 2 1/4X7 1/4	
16	312-454D	AXLE SPRING GUIDE TUBE	
17	312-212D	AXLE MOUNT PIN	
18	802-379C	HHCS 7/16-14X2 GR8	(S/N 81432+) Rev. 2 not compat. w/Rev. 1
18	802-115C	HHCS 5/16-18X2 GR5	(S/N 81431-) Rev. 1
19	803-200C	NUT HEX LOCK 7/16-14 PLT	(S/N 81432+) Rev. 2 not compat. w/Rev. 1
19	803-011C	NUT LOCK 5/16-18 PLT	(S/N 81431-) Rev. 1
20	312-210H	CENTER AXLE WELDMENT	
21	890-143C	BUSHING HARDENED 1 1/4-1-3/4 L	
22	890-005C	BUSHING CYL 1 1/4 X 1 X 1	
23	800-136C	ZERK 1/4-28 X 45 DEG SELF-TAP	Rev. 2 not compat. w/Rev. 1
23	800-058C	GREASE ZERK 1/4-28 X 45-DEG	Rev. 1
24	803-308C	NUT HEX FLG/LK 1/2-20 PLT GR G	

Axle to Center Deck

Applies to Models: RCF45180, RCFM45180

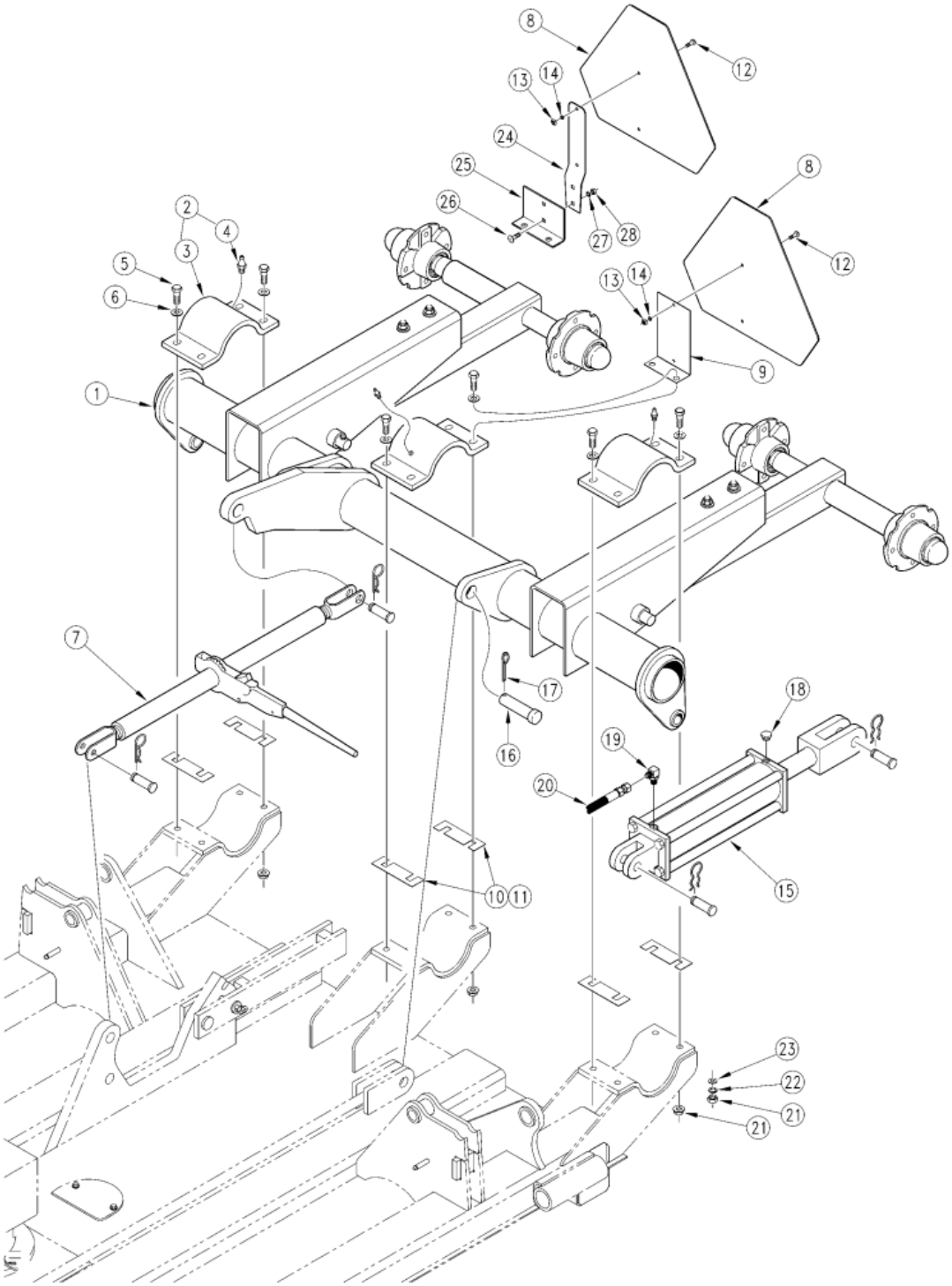

Axle to Center Deck

Applies to Models: RCF45180, RCFM45180

Ref.	Part No.	Part Description	Comments
	DWG14090	Drawing Image Number	
1	312-210H	CENTER AXLE WELDMENT	
2	312-277S	CAP TOP HALF W/ZERK	
3	312-445D	CAP TOP HALF	
4	800-080C	GREASE ZERK 1/4-28 THD FORMING	Rev. 2 not compat. w/Rev. 1
4	800-001C	GREASE ZERK STRAIGHT 1/4-28	Rev. 1
5	802-128C	HHCS 1/2-13X2 GR5	
6	804-016C	WASHER FLAT 1/2 SAE PLT	
7	890-177C	RATCHET JACK - HEAVY DUT	
8	818-055C	DECAL SLOW MOVING-GALV. BACKED	
9	312-587D	SMV BRACKET	
10	312-139D	SHIM 20GA ROCKSHAFT	
11	312-547D	SHIM 12GA ROCKSHAFT	
12	801-018C	SCREW RD HD 1/4-20 X 5/8	
13	803-005C	NUT SQ 1/4-20 PLT	
14	804-006C	WASHER LOCK SPRING 1/4 PLT	
15	810-162C	CYL 3.5X8X1.25 ROD (TIE ROD)	
16	805-145C	PIN CLVS 1.0X1.94 USBL	
17	805-104C	PIN COTTER 3/16 X 1 1/2 PLT	
18	800-094C	FILL PLUG VENTED 3/4-16 PLT	
19	811-063C	EL 3/4MJIC 3/4MORB	
20	811-353C	HH3/8R1 176 3/4MORB 3/4FJIC	
21	803-169C	NUT HEX FLG LOCK 1/2-13 PLT	(Rplcs 803-020C, 804-015C & 804-016C) Rev. 2
21	803-020C	NUT HEX 1/2-13 PLT	(RPBY 803-169C) Rev 1; Use up stock
22	804-015C	WASHER LOCK SPRING 1/2 PLT	(RPBY 803-169C) Rev 1; Use up stock
23	804-016C	WASHER FLAT 1/2 SAE PLT	(RPBY 803-169C) Rev 1; Use up stock
24	890-153C	SMV MOUNTING BLADE	(RPBY 312-587D) (S/N 124690-)
25	312-456D	SMV BASE WING MOUNT PLATE	(RPBY 312-587D) (S/N 124690-)
26	802-092C	RHSNB 5/16-18X3/4 GR5	(S/N 124690-)
27	804-009C	WASHER LOCK SPRING 5/16 PLT	(S/N 124690-)
28	803-008C	NUT HEX 5/16-18 PLT	(S/N 124690-)

Axle Wing

Applies to Models: RCF45180, RCFM45180

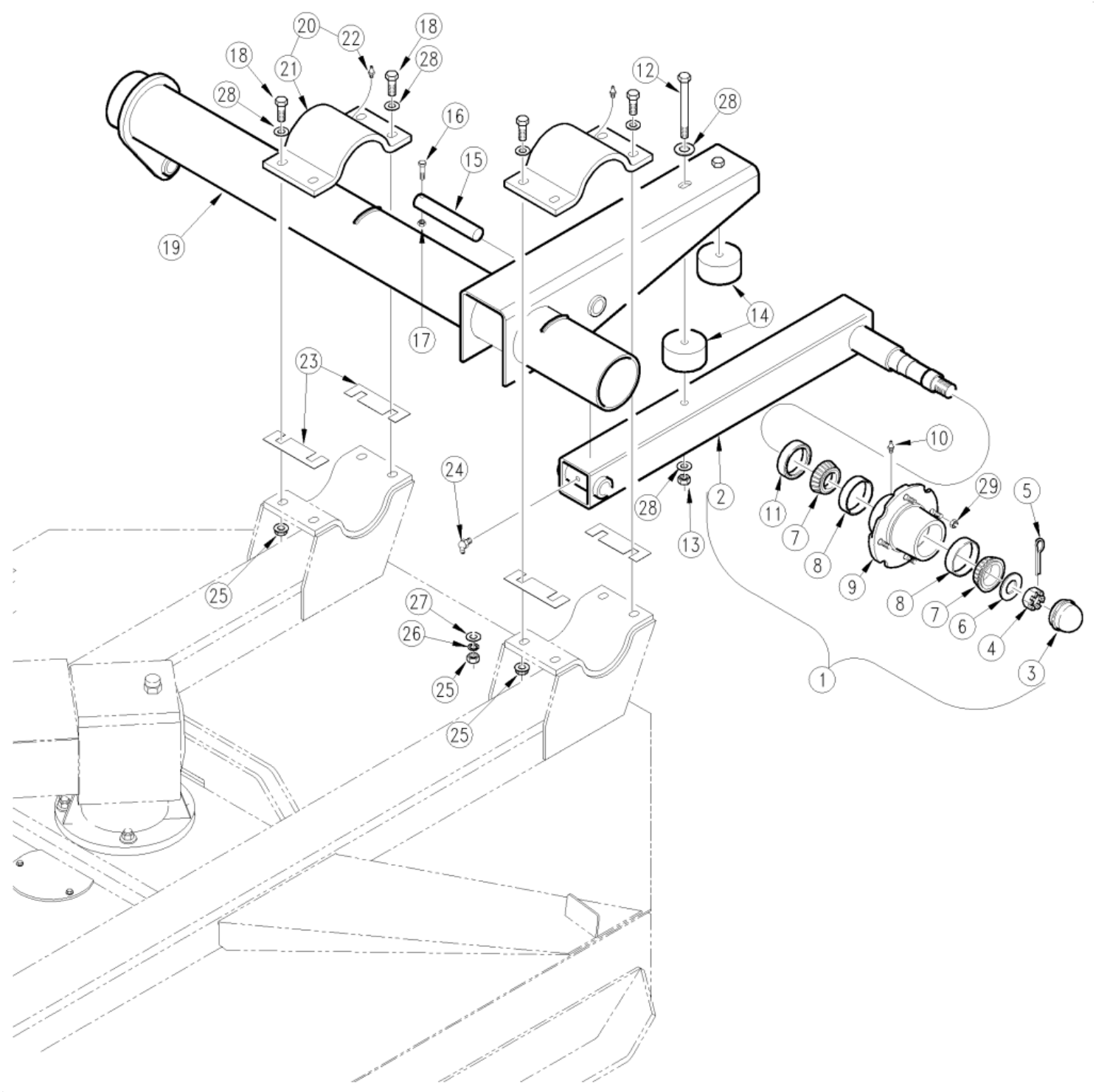

Axle Wing

Applies to Models: RCF45180, RCFM45180

Ref.	Part No.	Part Description	Comments
	DWG13171	Drawing Image Number	
1	312-253V	WING AXLE HUB & SPINDLE ASSY	
2	312-216H	WING AXLE TUBE WELDMENT	
3	200-001D	HUB GREASE CAP	
4	803-029C	NUT HEX SLOTTED 7/8-14 PLT	
5	805-016C	PIN COTTER 3/16 X 1 1/4 PLT	
6	804-055C	WASHER SPINDLE - 7/8	
7	822-091C	BRG 1.25ID CONE 15123	
8	822-092C	BRG CUP 2.44OD 15245	
9	815-230C	HUB 4 BLT W/CUPS, ZERK & STUDS	
10	800-001C	GREASE ZERK STRAIGHT 1/4-28	
11	816-098C	SEAL 1 3/8 ID X 2.441 OD X.313	
12	802-047C	HHCS 1/2-13X6 GR5	
13	803-147C	NUT HEX NYLOCK 1/2-13	
14	312-313D	RUBBER BUMPER	
15	312-212D	AXLE MOUNT PIN	
16	802-379C	HHCS 7/16-14X2 GR8	(S/N 81432+) Rev. 2 not compat. w/Rev. 1
16	802-115C	HHCS 5/16-18X2 GR5	(S/N 81431-) Rev. 1
17	803-200C	NUT HEX LOCK 7/16-14 PLT	(S/N 81432+) Rev. 2 not compat. w/Rev. 1
17	803-011C	NUT LOCK 5/16-18 PLT	(S/N 81431-) Rev. 1
18	802-128C	HHCS 1/2-13X2 GR5	
19	312-213H	WING AXLE WELDMENT LH	
19	312-214H	WING AXLE WELDMENT RH	
20	312-277S	CAP TOP HALF W/ZERK	
21	312-445D	CAP TOP HALF	
22	800-080C	GREASE ZERK 1/4-28 THD FORMING	Rev. 2 not compat. w/Rev. 1
22	800-001C	GREASE ZERK STRAIGHT 1/4-28	Rev. 1
23	312-139D	SHIM 20GA ROCKSHAFT	
23	312-547D	SHIM 12GA ROCKSHAFT	
24	800-136C	ZERK 1/4-28 X 45 DEG SELF-TAP	
25	803-169C	NUT HEX FLG LOCK 1/2-13 PLT	(Rplcs 803-020C, 804-015C & 804-016C) Rev. 2
25	803-020C	NUT HEX 1/2-13 PLT	(RPBY 803-169C) Rev 1; Use up stock
26	804-015C	WASHER LOCK SPRING 1/2 PLT	(RPBY 803-169C)
27	804-016C	WASHER FLAT 1/2 SAE PLT	(RPBY 803-169C)
28	804-016C	WASHER FLAT 1/2 SAE PLT	
29	803-308C	NUT HEX FLG/LK 1/2-20 PLT GR G	

Guards Center Deck (S/N 160278-)

Applies to Models: RCF45180, RCFM45180

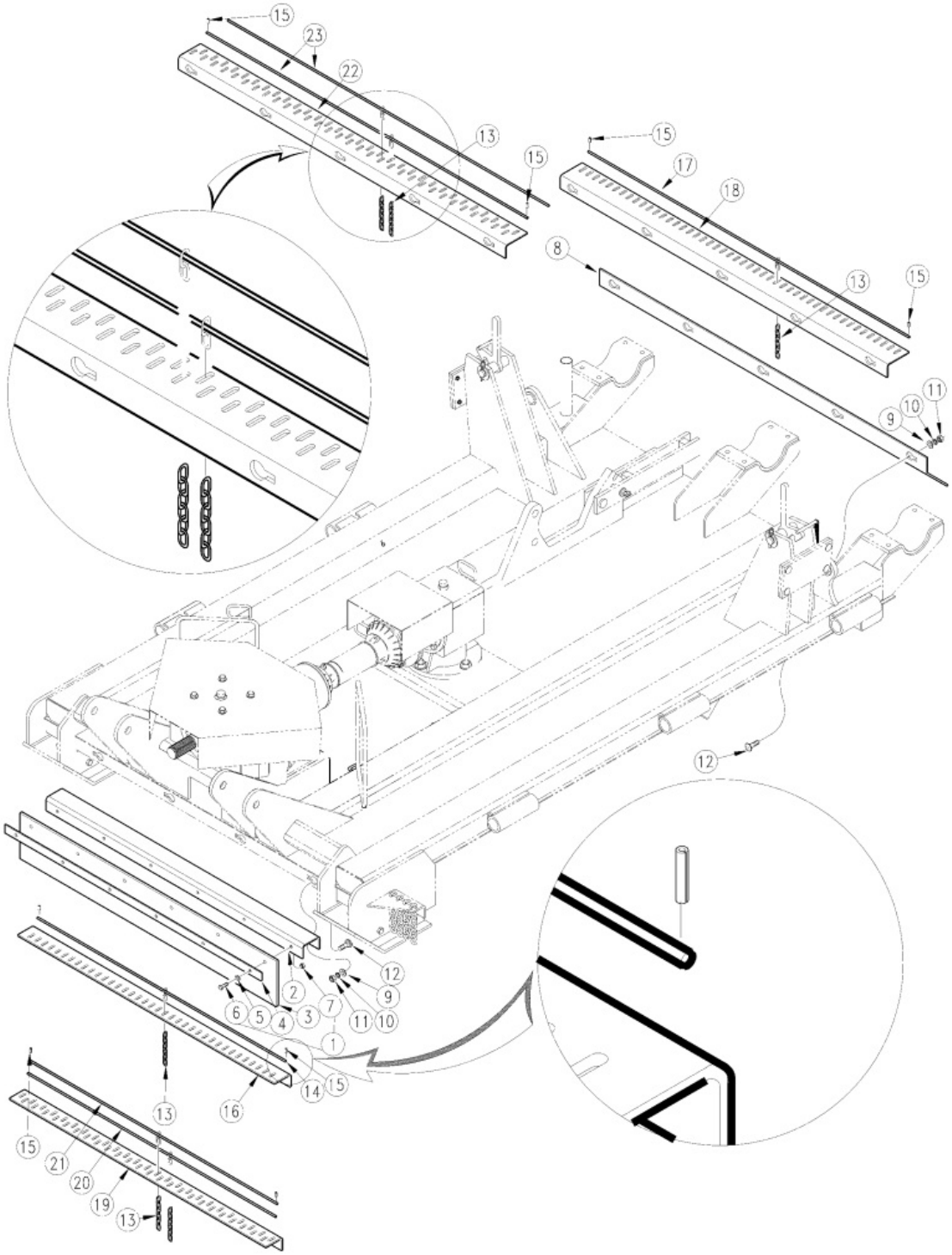

Guards Center Deck (S/N 160278-)

Applies to Models: RCF45180, RCFM45180

Ref.	Part No.	Part Description	Comments
	DWG11589	Drawing Image Number	
1	312-258K	RUBBER GUARD ASSY - CTR DECK	
2	312-444D	CRT DECK FRONT RBR GUARD CHANL	
3	816-121C	CDECK RUBBER GUARD	
4	312-071D	BACKUP STRIP-CTR RBR GUARD	
5	804-012C	WASHER FLAT 3/8 SAE PLT	
6	802-079C	HHCS 3/8-16X1 1/4 GR5	
7	803-078C	NUT LOCK 3/8-16 NYLON INSERT	
8	312-460D	SKIRT - CENTER DECK, REAR	
9	804-016C	WASHER FLAT 1/2 SAE PLT	
10	804-015C	WASHER LOCK SPRING 1/2 PLT	
11	803-020C	NUT HEX 1/2-13 PLT	
12	802-214C	RHSNB 1/2-13X1 1/4 GR5	
13	890-175C	CHAIN 5/16 GR 43 X 6 LINKS PLT	
14	312-475D	CHAIN HANGER ROD CENTER FWD	
15	805-136C	PIN ROLL 1/8 X 1 1/4 LG. PLT	Rev. 2
15	805-063C	PIN COTTER 3/32 X 1 LONG	Rev 1; Use up stock
16	312-466D	GUARD - CHAIN CTR DECK FRONT	
17	312-481D	CHAIN HANGER ROD CENTER AFT	
18	312-467D	GUARD - CHAIN CTR DECK REAR	
19	312-512D	GUARD, DUBLCHAIN CTR DECK FRNT	
20	312-522D	CHAIN HANGER ROD - 41 5/8 LONG	
21	312-475D	CHAIN HANGER ROD CENTER FWD	
22	312-513D	GUARD, DUBLCHAIN CTR DECK REAR	
23	312-523D	CHAIN HANGER ROD - 56 3/8 LONG	

Guards Center Deck (S/N 160279+)

Applies to Models: RCF45180, RCFM45180

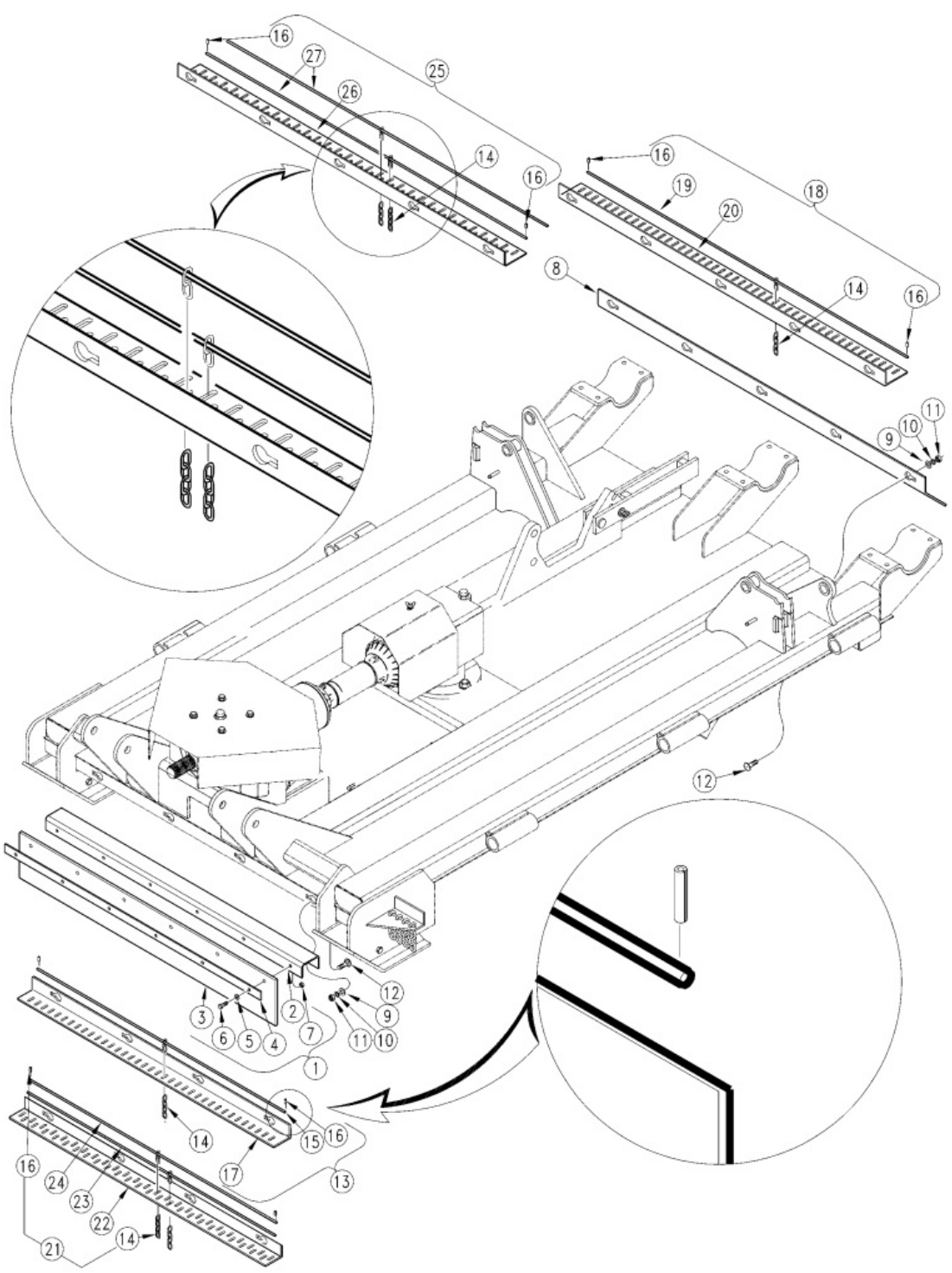

Guards Center Deck (S/N 160279+)

Applies to Models: RCF45180, RCFM45180

Ref.	Part No.	Part Description	Comments
	DWG14092	Drawing Image Number	
1	312-258K	RUBBER GUARD ASSY - CTR DECK	
2	312-444D	CRT DECK FRONT RBR GUARD CHANL	
3	816-121C	CDECK RUBBER GUARD	
4	312-071D	BACKUP STRIP-CTR RBR GUARD	
5	804-012C	WASHER FLAT 3/8 SAE PLT	
6	802-079C	HHCS 3/8-16X1 1/4 GR5	
7	803-078C	NUT LOCK 3/8-16 NYLON INSERT	
8	312-460D	SKIRT - CENTER DECK, REAR	
9	804-016C	WASHER FLAT 1/2 SAE PLT	
10	804-015C	WASHER LOCK SPRING 1/2 PLT	
11	803-020C	NUT HEX 1/2-13 PLT	
12	802-214C	RHSNB 1/2-13X1 1/4 GR5	
13	312-261K	GUARD ASSY - CTR DECK FRONT	
14	890-400C	CHAIN WELD 5/16 GR 43 X 4 LINK	
15	312-475D	CHAIN HANGER ROD CENTER FWD	
16	805-136C	PIN ROLL 1/8 X 1 1/4 LG. PLT	
17	312-742D	GUARD - CHAIN CTR DECK FRONT	
18	312-264K	GUARD ASSY - CTR DECK REAR	
19	312-481D	CHAIN HANGER ROD CENTER AFT	
20	312-743D	GUARD - CHAIN CTR DECK REAR	
21	312-323K	DUBL CHAIN GRD ASSY, LH WING F	
22	312-751D	GUARD-DBL CHAIN CTR DECK FRONT	
23	312-522D	CHAIN HANGER ROD - 41 5/8 LONG	
24	312-475D	CHAIN HANGER ROD CENTER FWD	
25	312-326K	DBL CHAIN GUARD, CTR REAR	
26	312-513D	GUARD, DUBLCHAIN CTR DECK REAR	
27	312-523D	CHAIN HANGER ROD - 56 3/8 LONG	

Guards Wing Deck (S/N 160278-)

Applies to Models: RCF45180, RCFM45180

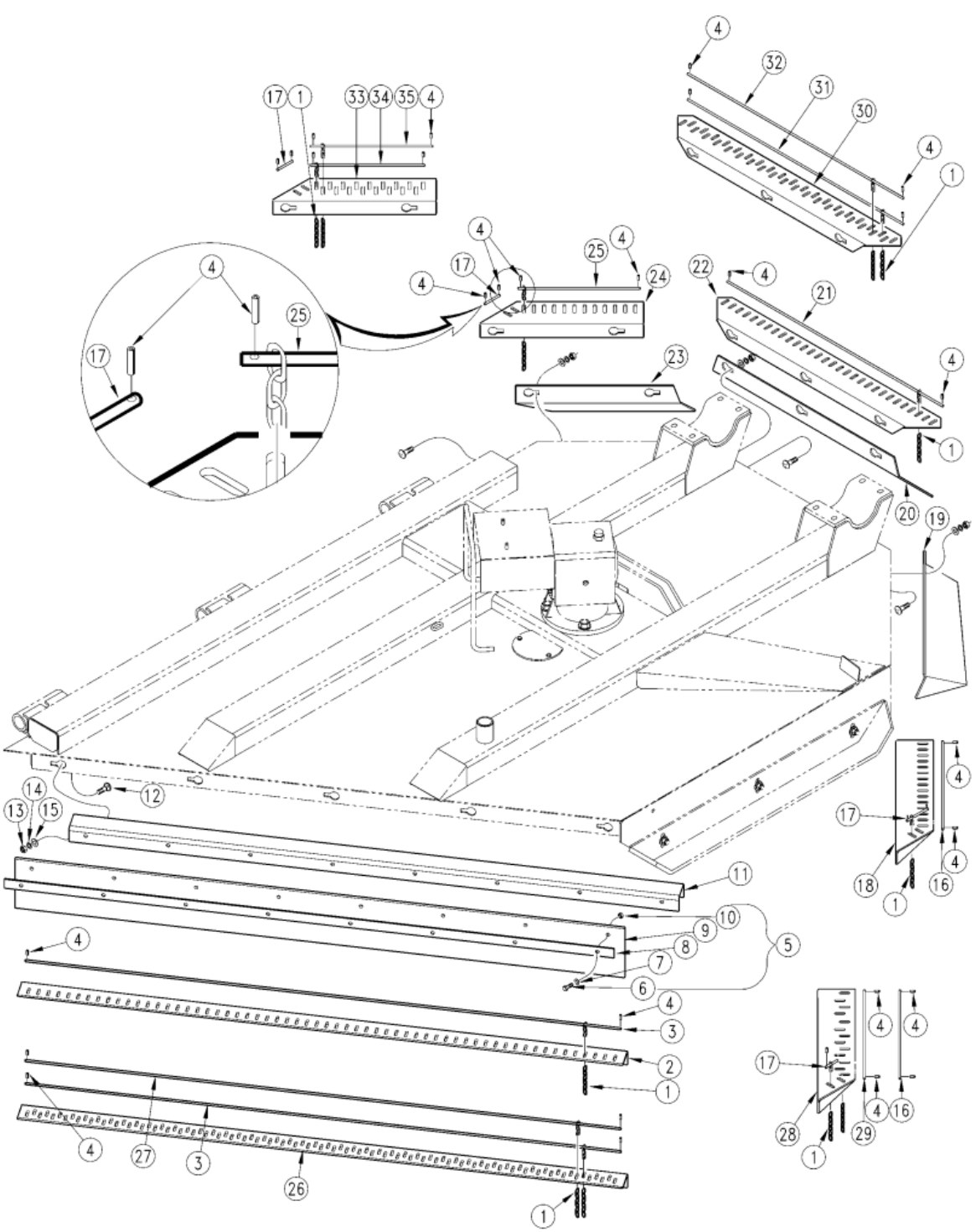

Guards Wing Deck (S/N 160278-)

Applies to Models: RCF45180, RCFM45180

Ref.	Part No.	Part Description	Comments
	DWG11084	Drawing Image Number	
1	890-175C	CHAIN 5/16 GR 43 X 6 LINKS PLT	
2	312-468D	GUARD - CHAIN LH WING FRONT	
2	312-469D	GUARD - CHAIN RH WING FRONT	
3	312-477D	CHAIN HANGER ROD WING FWD	
4	805-136C	PIN ROLL 1/8 X 1 1/4 LG. PLT	Rev. 2
4	805-063C	PIN COTTER 3/32 X 1 LONG	Rev 1; Use up stock
5	312-259K	RUBBER GUARD ASSY - LH WING	Obsolete
5	312-260K	RUBBER GUARD ASSY - RH WING	
6	802-079C	HHCS 3/8-16X1 1/4 GR5	
7	804-012C	WASHER FLAT 3/8 SAE PLT	
8	312-070D	BACKUP STRIP-WING RBR GUARD	
9	816-122C	RUBBER GUARD WING FRONT	Obsolete
10	803-078C	NUT LOCK 3/8-16 NYLON INSERT	
11	312-442D	CHANNEL - LH WING RBR GUARD	
11	312-443D	CHANNEL - RH WING RBR GUARD	
12	802-214C	RHSNB 1/2-13X1 1/4 GR5	
13	803-020C	NUT HEX 1/2-13 PLT	
14	804-015C	WASHER LOCK SPRING 1/2 PLT	
15	804-016C	WASHER FLAT 1/2 SAE PLT	
16	312-480D	CHAIN HANGER RD WING AFT OUTBD	
17	312-479D	WING CHAIN HANGER ROD - SHORT	
18	312-318H	CHAIN GUARD WELDMNT - RH WING	
18	312-317H	CHAIN GUARD WELDMNT - LH WING	
19	312-462D	SKIRT - LH WING REAR OUTBD	
19	312-464D	SKIRT - RH WING REAR OUTBD	
20	312-461D	SKIRT - WING REAR CENTER	
21	312-476D	CHAIN HANGER ROD WING AFT CTR	
22	312-474D	GUARD - CHAIN WING REAR CTR	
23	312-463D	SKIRT - LH WING REAR INBD	
23	312-465D	SKIRT - RH WING REAR INBD	
24	312-470D	GUARD-CHAIN LH WING REAR INBD	
24	312-471D	GUARD-CHAIN RH WING REAR INBD	
25	312-478D	CHAIN HANGER ROD WING AFT INBD	
26	312-514D	GUARD, DUBLCHAIN LH WING FRONT	
26	312-515D	GUARD, DUBLCHAIN RH WING FRONT	
27	312-524D	CHAIN HANGER ROD-69 5/16 LONG	
28	312-319H	DUBL CHAIN G WELDMT - LH WING	
28	312-320H	DUBL CHAIN G WELDMT - RH WING	
29	312-528D	CHAIN HANGER ROD-15 13/16 LONG	
30	312-520D	GUARD, DUBLCHAIN WING REAR CTR	
31	312-530D	CHAIN HANGER ROD - 32 3/8 LONG	
32	312-529D	CHAIN HANGER ROD - 34 1/4 LONG	
33	312-516D	GUARD, DUBLCHAIN LH WING R INB	
33	312-517D	GUARD, DUBLCHAIN RH WING R INB	
34	312-526D	CHAIN HANGER ROD - 12 1/8 LONG	
35	312-478D	CHAIN HANGER ROD WING AFT INBD	

Guards Wing Deck Front (S/N 160279+)

Applies to Models: RCF45180, RCFM45180

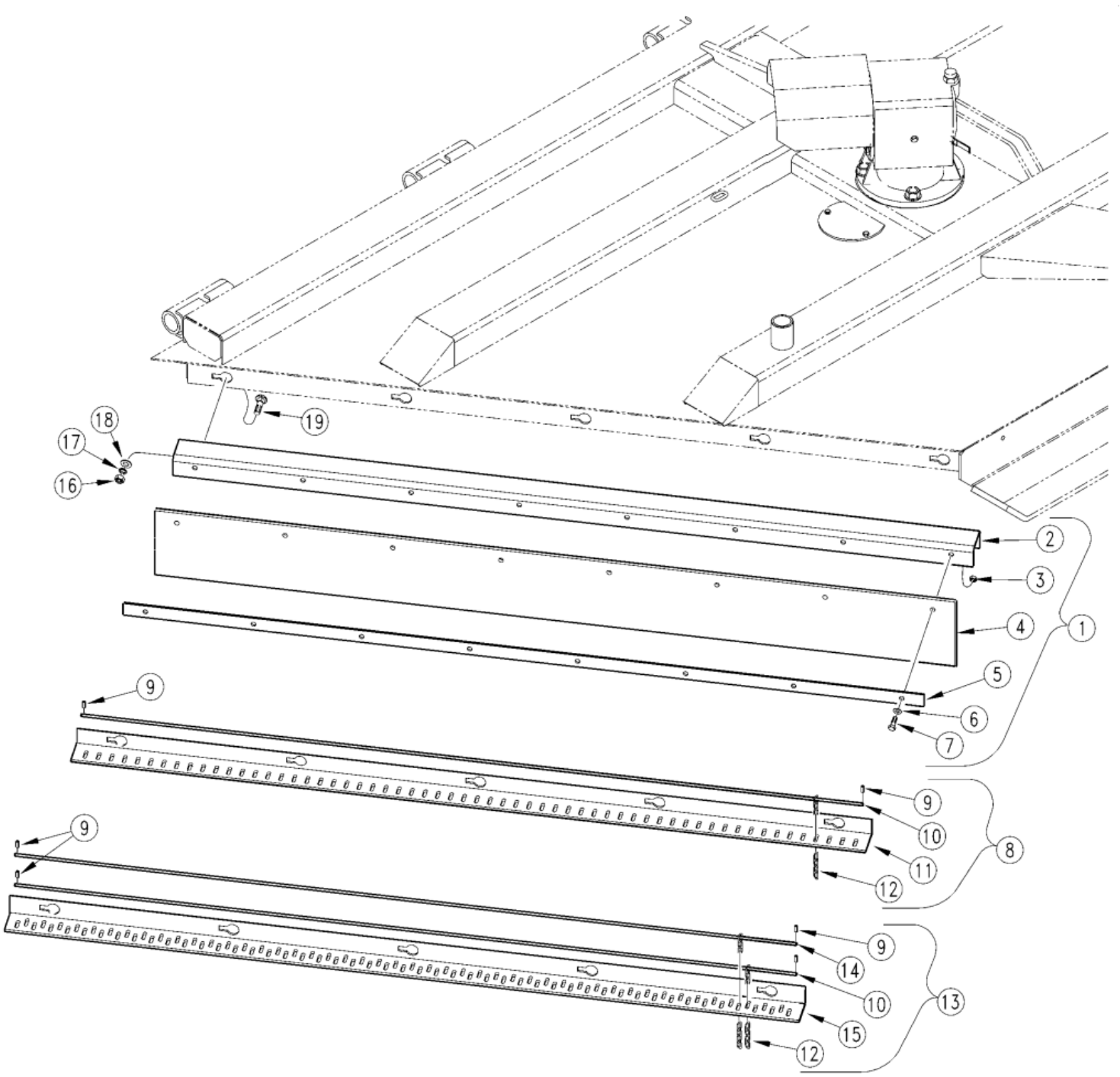

Guards Wing Deck Front (S/N 160279+)

Applies to Models: RCF45180, RCFM45180

Ref.	Part No.	Part Description	Comments
	DWG14093	Drawing Image Number	
1	312-259K	RUBBER GUARD ASSY - LH WING	Obsolete
1	312-260K	RUBBER GUARD ASSY - RH WING	
2	312-442D	CHANNEL - LH WING RBR GUARD	
2	312-443D	CHANNEL - RH WING RBR GUARD	
3	803-078C	NUT LOCK 3/8-16 NYLON INSERT	
4	816-122C	RUBBER GUARD WING FRONT	Obsolete
5	312-070D	BACKUP STRIP-WING RBR GUARD	
6	804-012C	WASHER FLAT 3/8 SAE PLT	
7	802-079C	HHCS 3/8-16X1 1/4 GR5	
8	312-262K	GUARD ASSY - LH WING FRONT	
8	312-263K	GUARD ASSY - RH WING FRONT	
9	805-136C	PIN ROLL 1/8 X 1 1/4 LG. PLT	
10	312-477D	CHAIN HANGER ROD WING FWD	
11	312-744D	GUARD - CHAIN LH WING FRONT	
11	312-745D	GUARD - CHAIN RH WING FRONT	
12	890-175C	CHAIN 5/16 GR 43 X 6 LINKS PLT	
13	312-324K	DUBL CHAIN GRD ASSY; LH WING F	
13	312-325K	DBL CHAIN GUARD, RH WING F	
14	312-524D	CHAIN HANGER ROD-69 5/16 LONG	
15	312-753D	GUARD-DBL CHAIN LH WING FRONT	
15	312-754D	GUARD-DBL CHAIN RH WING FRONT	
16	803-020C	NUT HEX 1/2-13 PLT	
17	804-015C	WASHER LOCK SPRING 1/2 PLT	
18	804-016C	WASHER FLAT 1/2 SAE PLT	
19	802-214C	RHSNB 1/2-13X1 1/4 GR5	

Guards Wing Deck Rear (S/N 160279+)

Applies to Models: RCF45180, RCFM45180

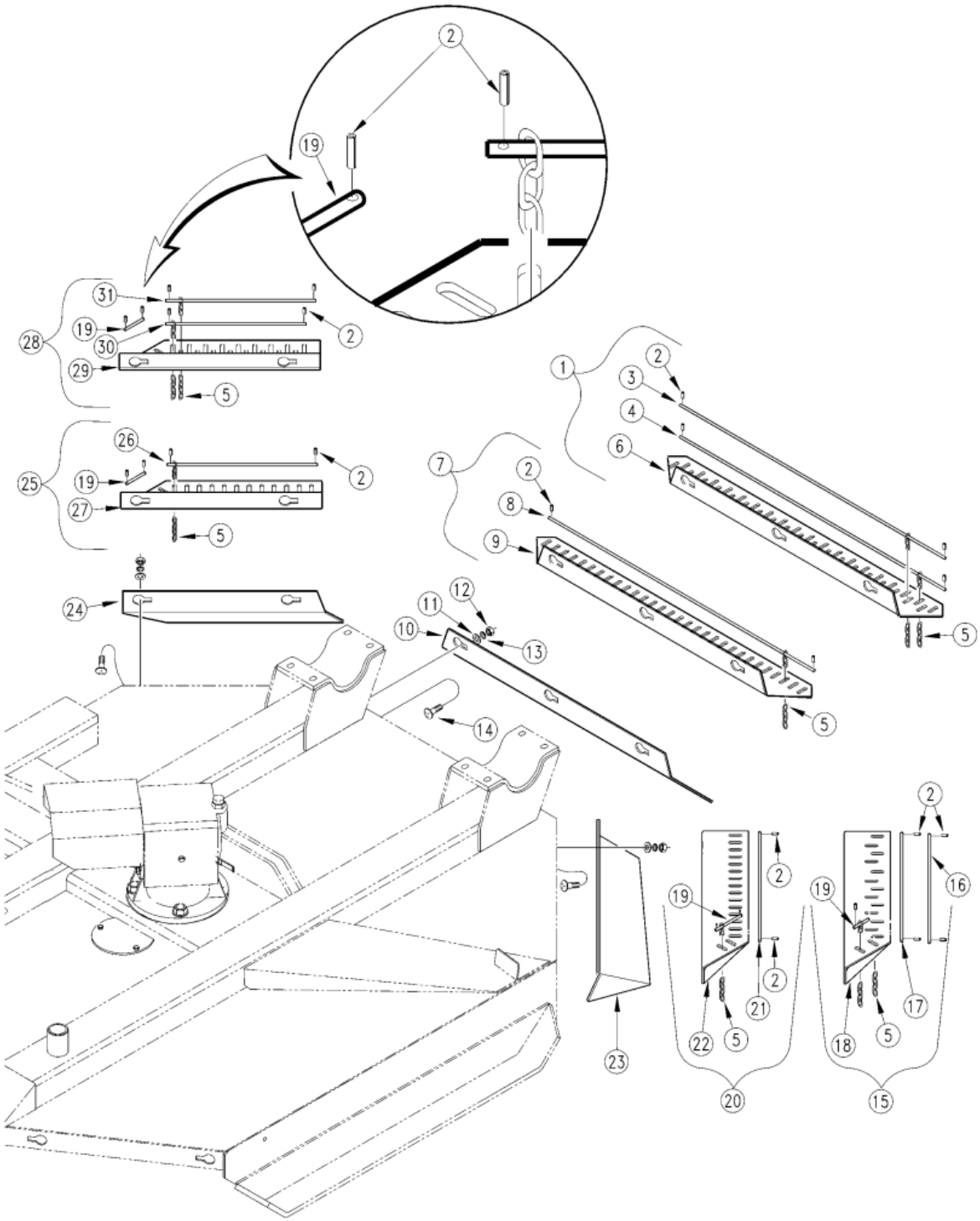

Guards Wing Deck Rear (S/N 160279+)

Applies to Models: RCF45180, RCFM45180

Ref.	Part No.	Part Description	Comments
	DWG14094	Drawing Image Number	
1	312-328K	DBL CHAIN GRD ASSY, WING R CTR	
2	805-136C	PIN ROLL 1/8 X 1 1/4 LG. PLT	
3	312-529D	CHAIN HANGER ROD - 34 1/4 LONG	
4	312-530D	CHAIN HANGER ROD - 32 3/8 LONG	
5	890-400C	CHAIN WELD 5/16 GR 43 X 4 LINK	
6	312-759D	GUARD-DBL CHAIN WING REAR CTR	
7	312-266K	\UARD ASSY - WING REAR CTR	
8	312-476D	CHAIN HANGER ROD WING AFT CTR	
9	312-750D	GUARD - CHAIN WING REAR CTR	
10	312-461D	SKIRT - WING REAR CENTER	
11	804-016C	WASHER FLAT 1/2 SAE PLT	
12	803-020C	NUT HEX 1/2-13 PLT	
13	804-015C	WASHER LOCK SPRING 1/2 PLT	
14	802-214C	RHSNB 1/2-13X1 1/4 GR5	
15	312-327K	DBL CHAIN GRD ASSY, LH REAR O	
15	312-331K	DBL CHAIN GRD ASSY, RH REAR O	
16	312-480D	CHAIN HANGER RD WING AFT OUTBD	
17	312-528D	CHAIN HANGER ROD-15 13/16 LONG	
18	312-450H	CHAIN GUARD DBL WLD-LH WNG OTB	
18	312-449H	CHAIN GUARD DBL WLD-RH WNG OTB	
19	312-479D	WING CHAIN HANGER ROD - SHORT	
20	312-265K	GUARD ASSY -LH WING REAR OUTBD	
20	312-269K	GUARD ASSY -RH WING REAR OUTBD	
21	312-480D	CHAIN HANGER RD WING AFT OUTBD	
22	312-447H	CHAIN GUARD WLD-RH WING OUTBD	
22	312-448H	CHAIN GUARD WLD-LH WING OUTBD	
23	312-462D	SKIRT - LH WING REAR OUTBD	
23	312-464D	SKIRT - RH WING REAR OUTBD	
24	312-463D	SKIRT - LH WING REAR INBD	
24	312-465D	SKIRT - RH WING REAR INBD	
25	312-267K	GUARD ASSY - LH WING REAR INBD	
25	312-268K	GUARD ASSY - RH WING REAR INBD	
26	312-478D	CHAIN HANGER ROD WING AFT INBD	
27	312-746D	GUARD-CHAIN LH WING REAR INBD	
27	312-747D	GUARD-CHAIN RH WING REAR INBD	
28	312-329K	DBL CHAIN GRD ASSY, LH REAR I	
28	312-330K	DBL CHAIN GRD ASSY, RH REAR I	
29	312-755D	GUARD-DBL CHAIN LH WNG R INBD	
29	312-756D	GUARD-DBL CHAIN RH WNG R INBD	
30	312-526D	CHAIN HANGER ROD - 12 1/8 LONG	
31	312-478D	CHAIN HANGER ROD WING AFT INBD	

Driveline Arrangement- 1000 RPM

Applies to Models: RCFM45180

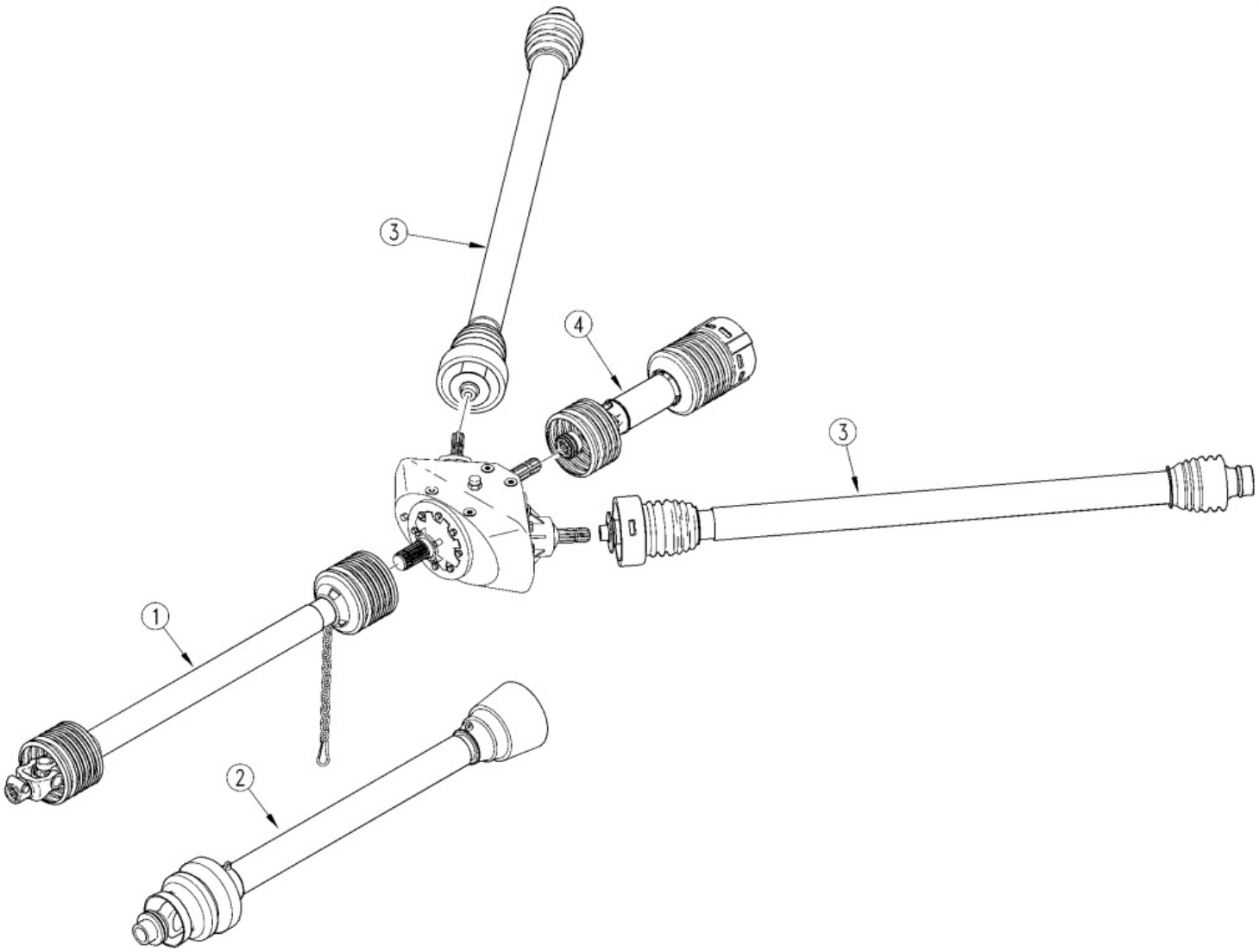

Driveline Arrangement- 1000 RPM

Applies to Models: RCFM45180

Ref.	Part No.	Part Description	Comments
	DWG 14761	Drawing Image Number	
1	826-113C	DRVLN C4 44 1.38-21 QD	(S/N 115261+)
1	826-084C	RPBY 826-113C	Obsolete (S/N 115260-)
2	826-644C	DRVLN C6 42 1.38-21 CV	
2	826-477C	RPBY 826-644C	(Obsolete) Service Only
2	826-244C	RPBY 826-477C	(Obsolete) Rev. 2 not compat. w/Rev. 1
2	826-118C	DRVLN C4 50 1.38-21 CV	(S/N 115261+) Check for Proper Length Before Installation Rev. 1
2	826-099C	RPBY 826-644C	Obsolete (S/N 82428<->115260)
2	826-077C	RPBY 826-099C	Obsolete (S/N 82427-)
3	826-116C	DRVLN C4 50 1.38-6 QD CLTCH	(S/N 115261+)
3	826-096C	RPBY 826-116C	Obsolete (S/N 82428<->115260)
3	826-079C	RPBY 826-096C	Obsolete (S/N 82427-)
4	826-115C	RPBY (FIX W/COMPONENTS)	(S/N 115261<->119062) (S/N 135000+)
4	826-095C	RPBY 826-115C	Obsolete (S/N 82428<->115260) (S/N 119063<->134999)
4	826-078C	RPBY 826-094C & 826-095C	Obsolete (S/N 82427-)

Driveline Arrangement- 540 RPM

Applies to Models: RCF45180

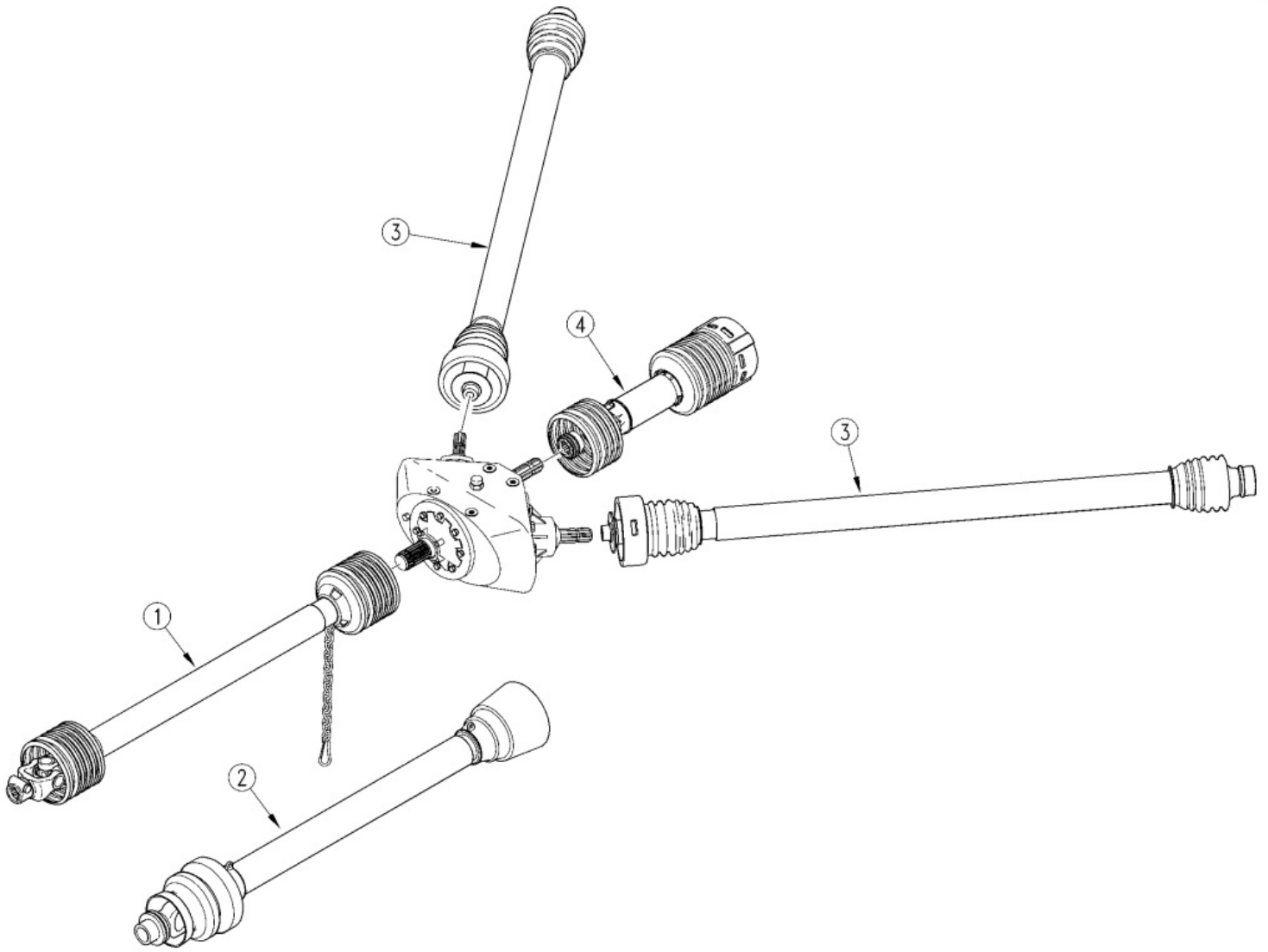

Driveline Arrangement- 540 RPM

Applies to Models: RCF45180

Ref.	Part No.	Part Description	Comments
	DWG 14761	Drawing Image Number	
1	826-112C	DRVLN C5 40 1.38-6 QD	(S/N 115261+)
1	826-083C	RPBY 826-112C	Obsolete (S/N 115260-)
2	826-643C	DRVLN C6 42 1.38-6 CV	
2	826-476C	RPBY 826-643C	(Obsolete) Service Only
2	826-117C	RPBY 826-476C	Obsolete (S/N 115261+)
2	826-098C	RPBY 826-117C	Obsolete (S/N 82428<->115260)
2	826-076C	RPBY 826-098C	Obsolete (S/N 82427-)
3	826-116C	DRVLN C4 50 1.38-6 QD CLTCH	(S/N 115261+)
3	826-096C	RPBY 826-116C	Obsolete (S/N 82428<->115260)
3	826-079C	RPBY 826-096C	Obsolete (S/N 82427-)
4	826-114C	RPBY (FIX W/COMPONENTS)	(S/N 115261+)
4	826-094C	RPBY 826-114C	Obsolete (S/N 82428<->115260)
4	826-078C	RPBY 826-094C & 826-095C	Obsolete (S/N 82427-)

Driveline (826-643C) Weasler

Applies to Models: RCF45180

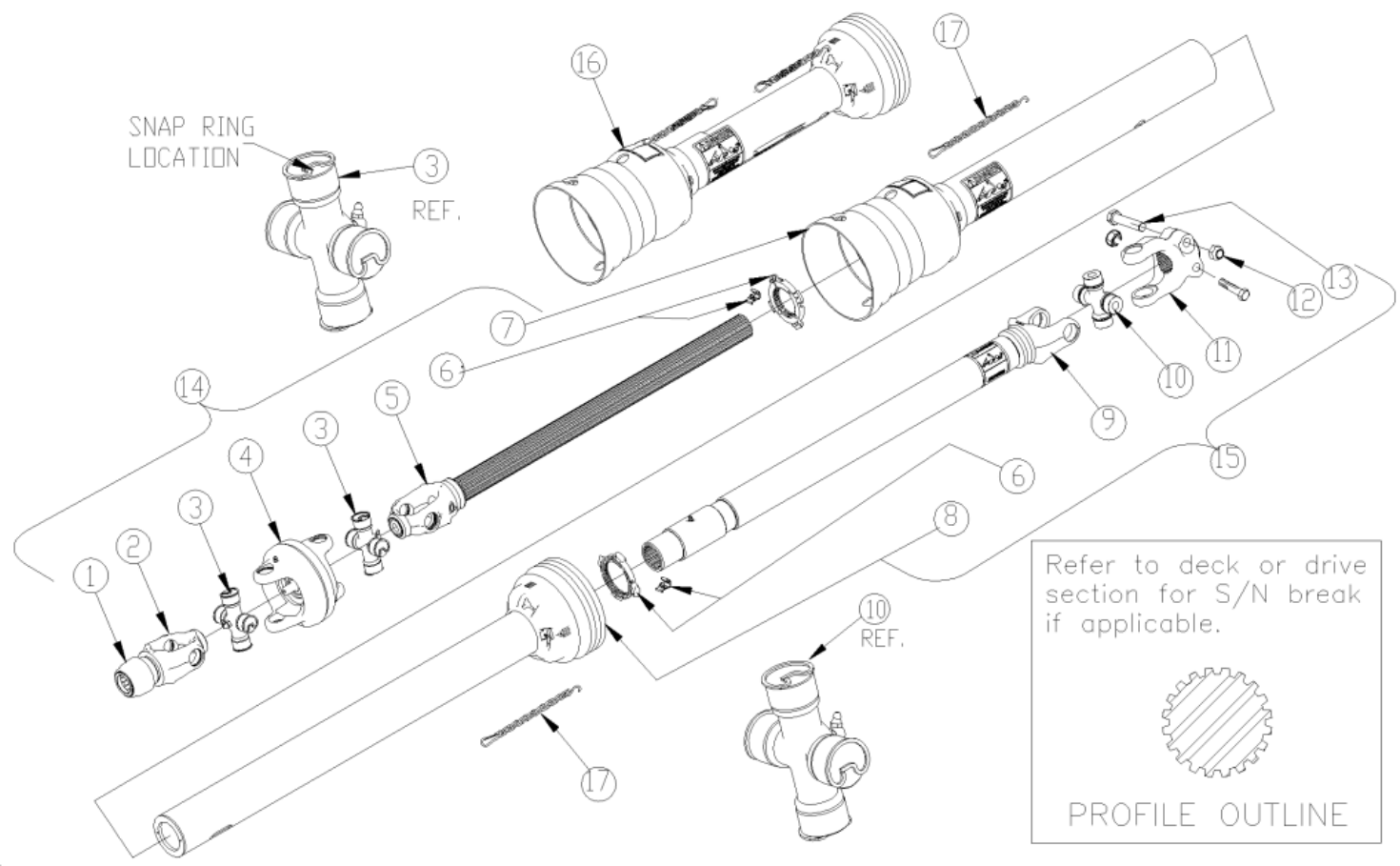

Driveline (826-643C) Weasler

Applies to Models: RCF45180

Ref.	Part No.	Part Description	Comments
	DWG 30185	Image No.	
	826-643C	DRVLN C6 42 1.38-6 CV	
		*	
1	26-15120	WE SSL/AUTO-LOK REPAIR KIT	
2	68810-1004	WE WWCV AUTO-LOK YOKE ASM	
3	03-15570	WE AB8/AW25EBL CROSS KIT	
4	26-16033	WE WWCV CENTER HOUSING	
5	99-24406	WE YOKE&SHAFT (1.69-20 SPLINE)	
6	19-15135	WE GUARD REPAIR KIT	
7	97-24406	WE OUTER GUARD	
8	96-24406	WE INNER GUARD	
9	98-24406	WE YOKE, TUBE & SLIP SLEEVE	
10	03-15316	WE 55EBL CROSS KIT	
11	55051-1817	WE YOKE	
12	11-14988	WE LOCK NUT .625-11	
13	11-15180	WE BOLT .625-11 X 3.00L GR8	
14	93-24406	WE JOINT&SHFT HALF ASM W/GUARD	
15	92-24406	WE JOINT&TUBE HALF ASM W/GUARD	
16	90-24406	WE GUARD SET	
17	11-80005	WE CHAIN	(S/N 928934-)

Driveline 540 RPM (826-094C) (S/N 82428 to 115620)

Applies to Models: RCF45180

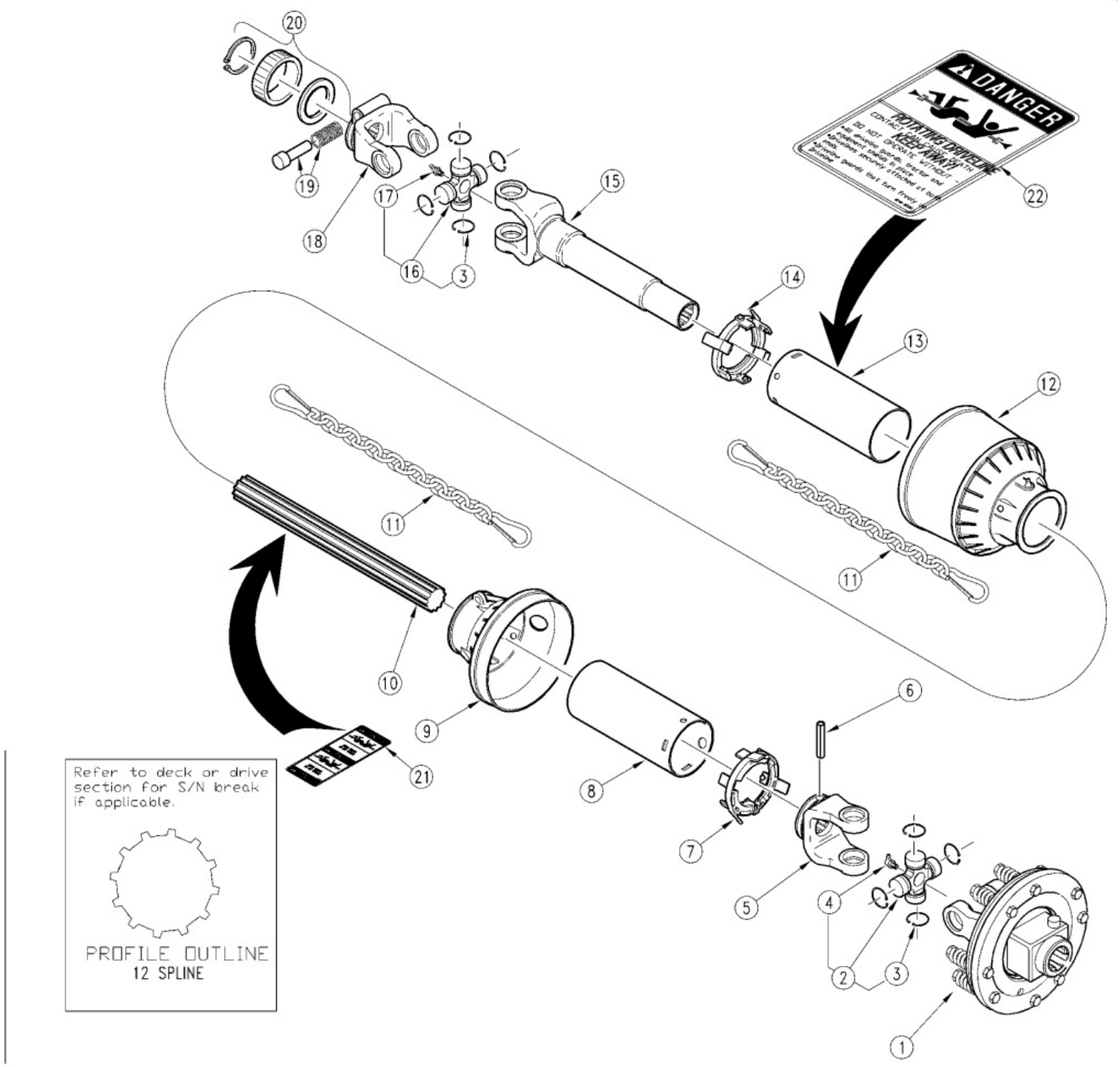

Driveline 540 RPM (826-094C) (S/N 82428 to 115620)

Applies to Models: RCF45180

Ref.	Part No.	Part Description	Comments
	DWG 11622	Drawing Image Number	
	826-094C	RPBY 826-114C *	Obsolete
1	638248001	BP TORQUE LIMITER	Obsolete
2	41205	BP CROSS JOURNAL ASSY	
3	338020000	BP SNAP RING	
4	348004000	RPBY 084099	
5	204053361	BP YOKE FEMALE	
6	345012000	BP ROLL PIN	Obsolete
7	255050006	BP INNER BRG	
8	236530152	RPBY 236820152	
9	517050099	BP CONE WITH COLLAR	
10	249110242	BP CM SPLINED MALE	Obsolete
11	252000001	BP SAFETY CHAIN	
12	517050098	BP CONE WITH COLLAR	
13	236630152	RPBY 236830152	
14	255050005	BP OUTER BRG	
15	569B50254	BP YOKE FEMALE	
16	412050006	BP CROSS JOURNAL ASSY	
17	348005000	REPLACED BY 084099	
18	572050351	BP YOKE	
19	403000001	BP COMPLETE PUSH BUTTON	
20	240003051	RPBY 240002461	
21	399143000	RPBY 818-152C	
22	399141000	RPBY 818-540C	

Driveline Center (826-078C) (S/N 82427-)

Applies to Models: RCF45180, RCFM45180

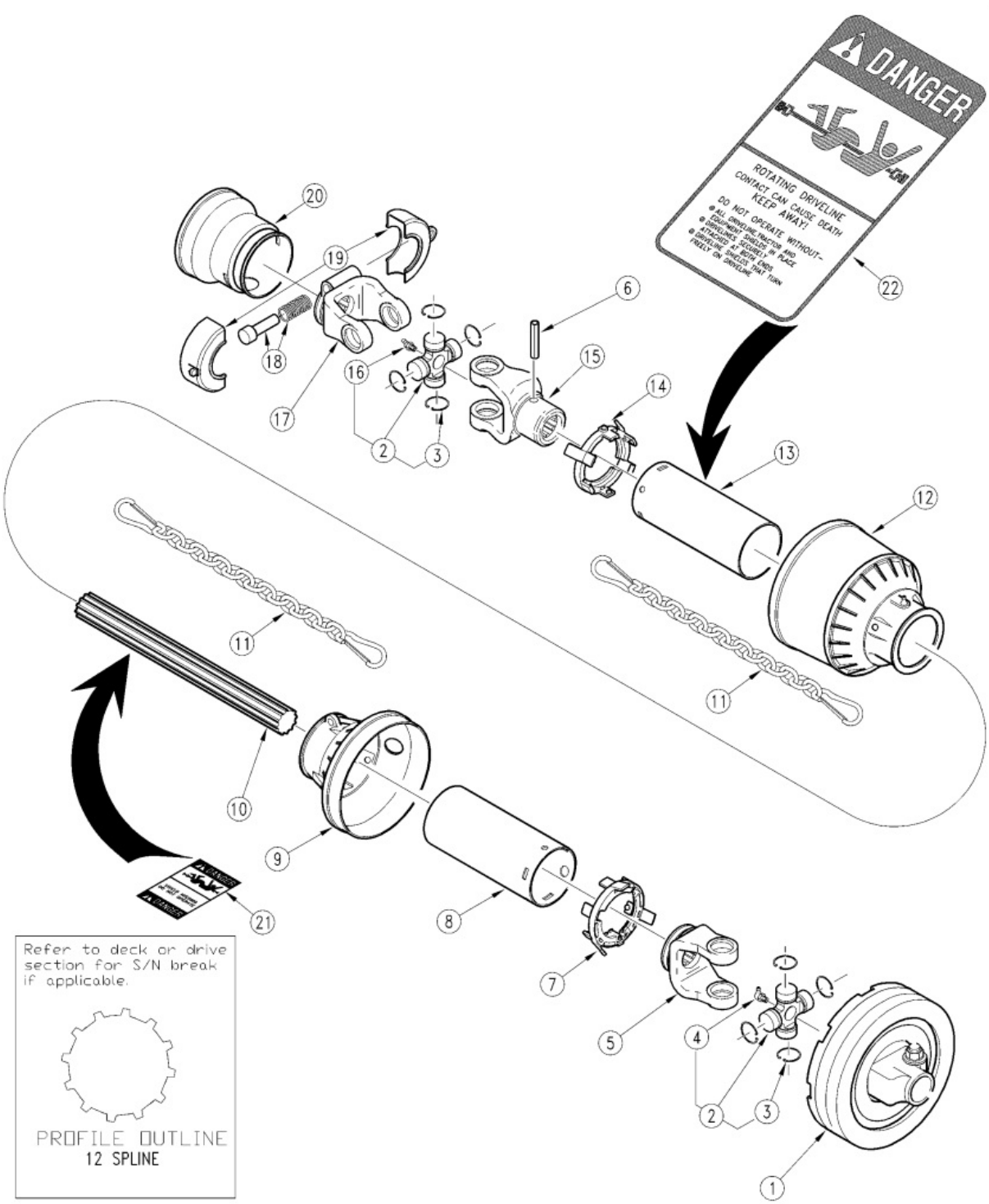

Driveline Center (826-078C) (S/N 82427-)

Applies to Models: RCF45180, RCFM45180

Ref.	Part No.	Part Description	Comments
	DWG 11114	Drawing Image Number	
	826-078C	RPBY 826-094C & 826-095C *	Obsolete
1	663G48403R	BR TORQUE LIMITER	
1	676548303	RPBY 663G48403R	Obsolete
2	412050006	BP CROSS JOURNAL ASSY	
3	338020000	BP SNAP RING	
4	348005000	REPLACED BY 084099	
5	204053354	RPBY 204053361	
6	345012000	BP ROLL PIN	Obsolete
7	255050005	BP OUTER BRG	
8	236630185	RPBY 236830185	
9	517050008	BP CONE WITH COLLAR	
10	249110330	BP SHAFT SPLINED	
11	252000001	BP SAFETY CHAIN	
12	517050091	INNER SAFTEY CONE	
13	236530185	RPBY 236820185	
14	255050006	BP INNER BRG	
15	204053361	BP YOKE FEMALE	
16	348004000	RPBY 084099	
17	510050351	BP YOKE	
18	403000001	BP COMPLETE PUSH BUTTON	
19	255050009	BP RING NUT	
20	517050008	BP CONE WITH COLLAR	
21	399141000	RPBY 818-540C	
22	399143000	RPBY 818-152C	

Driveline Center (826-095C) (S/N 82428 to 115260) (S/N 119063 to 134999)

Applies to Models: RCFM45180

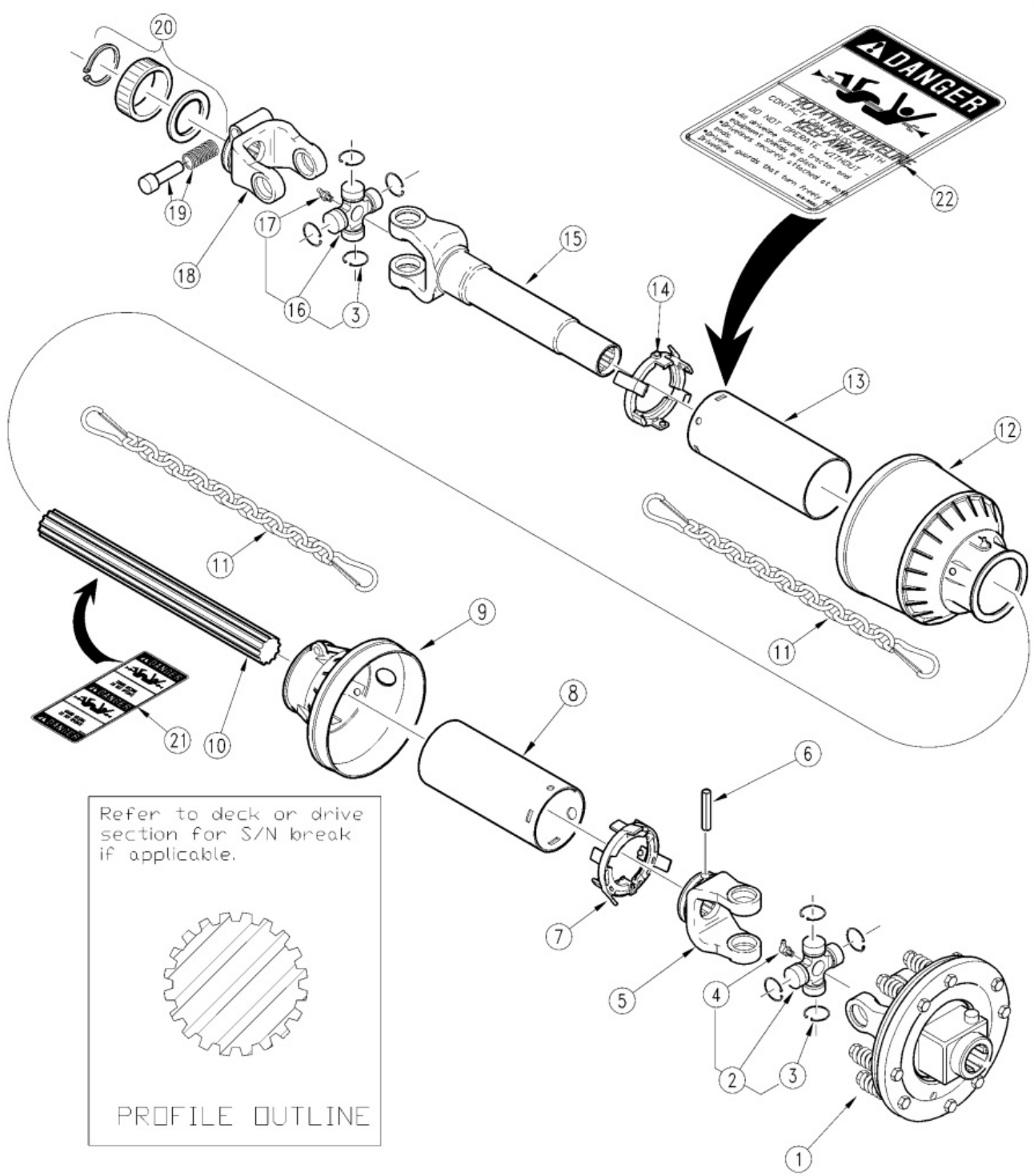

Driveline Center (826-095C) (S/N 82428 to 115260) (S/N 119063 to 134999)

Applies to Models: RCFM45180

Ref.	Part No.	Part Description	Comments
	DWG 11621	Drawing Image Number	
	826-095C	RPBY 826-115C *	Obsolete
1	638237001	BP TORQUE LIMITER	
2	412050006	BP CROSS JOURNAL ASSY	
2	41205	BP CROSS JOURNAL ASSY	
3	338020000	BP SNAP RING	
4	348004000	RPBY 084099	
5	204053361	BP YOKE FEMALE	
6	345012000	BP ROLL PIN	Obsolete
7	255050006	BP INNER BRG	
8	236530152	RPBY 236820152	
9	517050099	BP CONE WITH COLLAR	
10	249110242	BP CM SPLINED MALE	Obsolete
11	252000001	BP SAFETY CHAIN	
12	517050098	BP CONE WITH COLLAR	
13	236630152	RPBY 236830152	
14	255050005	BP OUTER BRG	
15	569B50254	BP YOKE FEMALE	
16	412050006	BP CROSS JOURNAL ASSY	
17	348005000	REPLACED BY 084099	
18	572050351	BP YOKE	
19	403000001	BP COMPLETE PUSH BUTTON	
20	240003051	RPBY 240002461	
21	399143000	RPBY 818-152C	
22	399141000	RPBY 818-540C	

Driveline Center (826-115C) (S/N 115261 to 119062) (S/N 135000+)

Applies to Models: RCFM45180

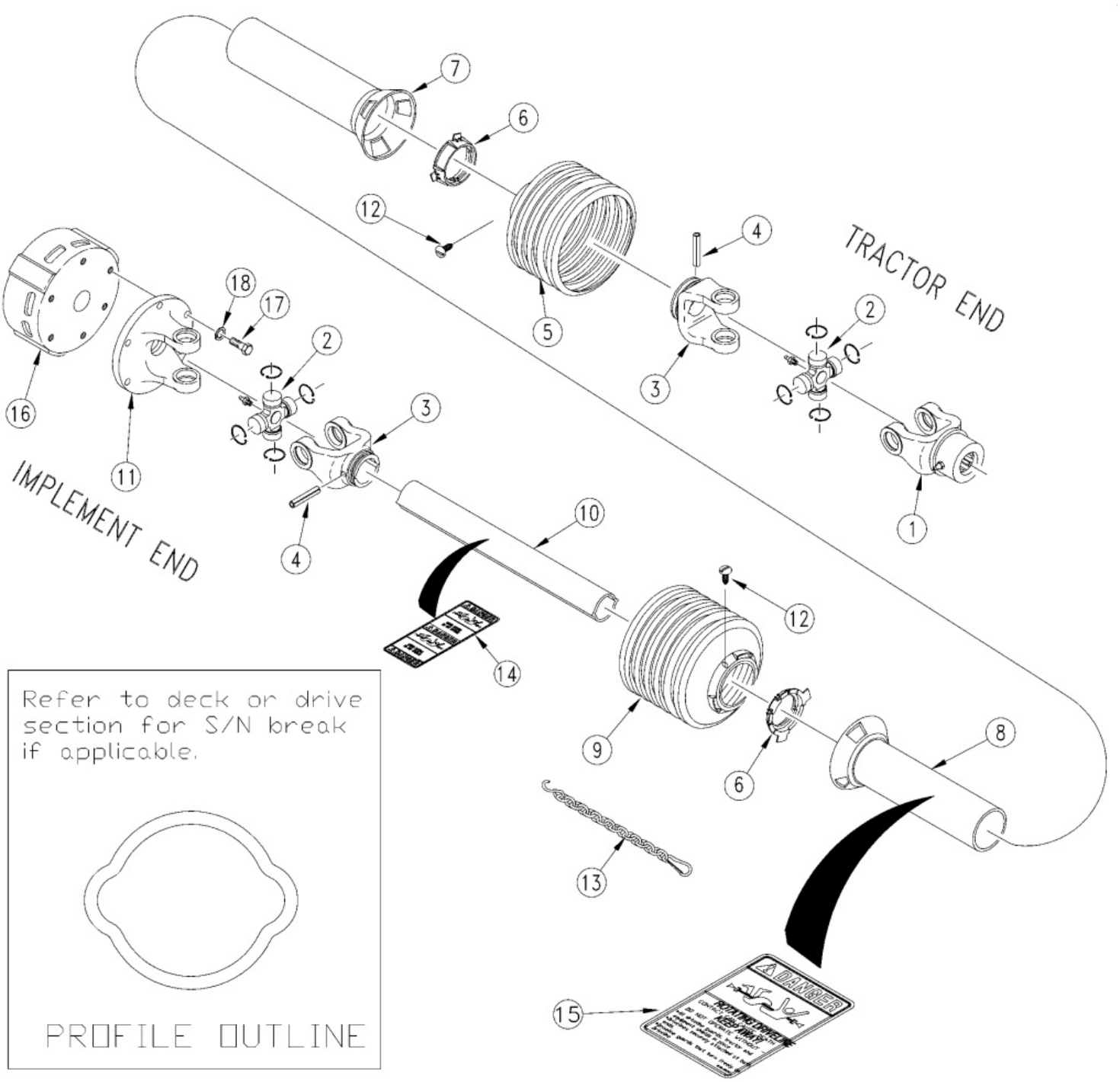

Driveline Center (826-115C) (S/N 115261 to 119062) (S/N 135000+)

Applies to Models: RCFM45180

Ref.	Part No.	Part Description	Comments
	DWG26854	Drawing Image Number	
	826-115C	RPBY (FIX W/COMPONENTS)	
1	382329	WS YOKE 1 3/8-6 SPL ASSY	
2	312410	WS CROSS BRG KIT	
3	019519	WS INBOARD YOKE	
4	020617	WS SPRING PIN 10 X 20	
5	377336	WS SHIELD CONE 6 RIB	
6	087276	WS BRG RING - SC25	
7	386428	WS INNER SHIELD (387393) 100MM	
8	386427	WS OUT SHLD TB (382155) 100MM	
9	377436	WS SHIELD CONE - 6 RIB	
10	389856	WS OUTER PROFILE 2A	
11	023469	WS FLANGE YOKE	
12	365305	WS SCREW	
13	044321	DRIVELINE SHIELD SAFETY CHAIN	
14	818-540C	DECAL DANGER GUARD MISS PTO	
15	818-552C	DECAL DANGER PTO DRIVELINE	
16	053385	WS EK92 CLUTCH 900 NM 2400	
17	020514	WS HEXAGON SCREW	
18	020103	WS LOCKWASHER A8 DIN 127	

Driveline Center 540 RPM (826-114C) (S/N 115261+)

Applies to Models: RCF45180

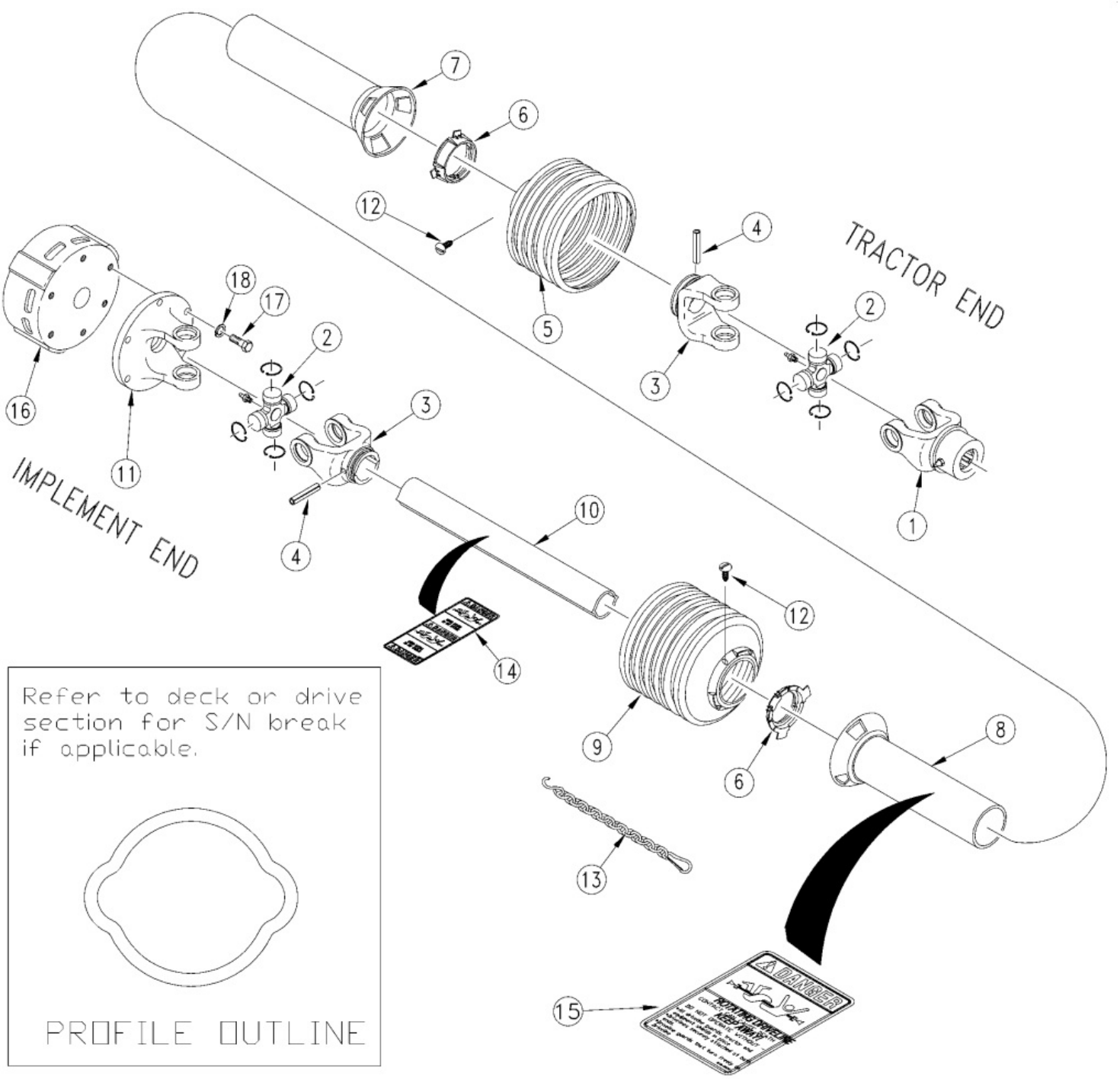

Driveline Center 540 RPM (826-114C) (S/N 115261+)

Applies to Models: RCF45180

Ref.	Part No.	Part Description	Comments
	DWG12384	Drawing Image Number	
	826-114C	RPBY (FIX W/COMPONENTS)	
1	382329	WS YOKE 1 3/8-6 SPL ASSY	
2	312410	WS CROSS BRG KIT	
3	019519	WS INBOARD YOKE	
4	020617	WS SPRING PIN 10 X 20	
5	377336	WS SHIELD CONE 6 RIB	
6	087276	WS BRG RING - SC25	
7	386428	WS INNER SHIELD (387393) 100MM	
8	386427	WS OUT SHLD TB (382155) 100MM	
9	377436	WS SHIELD CONE - 6 RIB	
10	388695	WS OUT PROF 2A (389856) 278MM	
11	023474	WS FLANGE YOKE	Obsolete
12	365305	WS SCREW	
13	044321	DRIVELINE SHIELD SAFETY CHAIN	
14	818-540C	DECAL DANGER GUARD MISS PTO	
15	818-552C	DECAL DANGER PTO DRIVELINE	
16	053356	WS EK92/4 CLUTCH 1350 NM 2400	
17	020530	WS BOLT M12 X 25-8.8 DIN933	
18	804-159C	WASHER SPRING LOCK M12 PLT	

Driveline Conv. 1000 RPM (826-084C) (S/N 115260-)

Applies to Models: RCFM45180

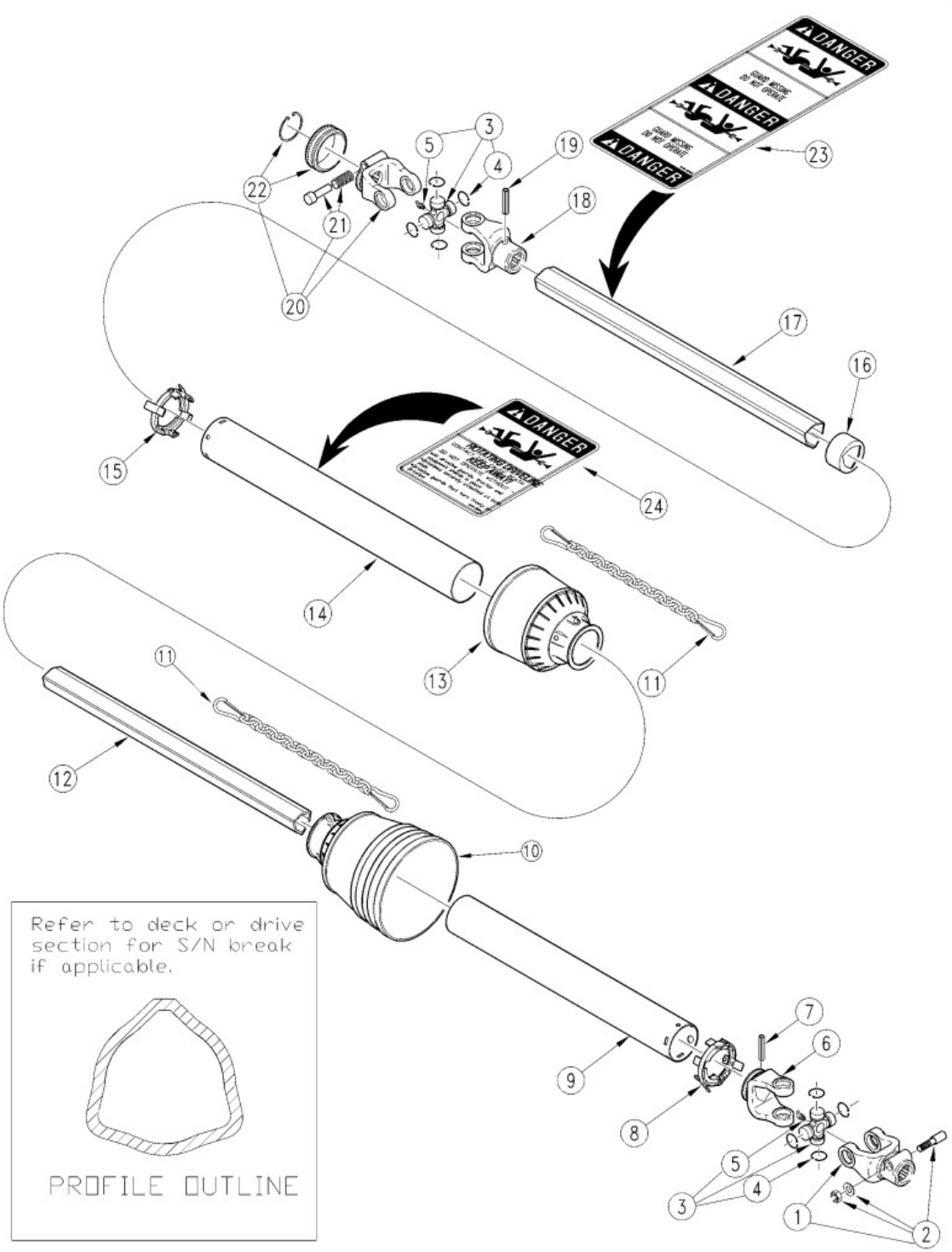

Driveline Conv. 1000 RPM (826-084C) (S/N 115260-)

Applies to Models: RCFM45180

Ref.	Part No.	Part Description	Comments
	DWG 26852	Drawing Image Number	
	826-084C	RPBY 826-113C *	Obsolete
1	509063854	BP YOKE	
2	408000041	RPBY 408000061	
3	412060012	BP CROSS JOURNAL ASSY	
3	41206	BP CROSS JOURNAL ASSY	
4	338020000	BP SNAP RING	
5	348004000	RPBY 084099	
6	204066852	BP INNER TUBE YOKE	
7	341043000	BP ROLL PIN	
8	255060006	BP INNER BRG	
9	237005309	BP SAFETY TUBE	
10	517050009	RPBY 517050024	
11	252000001	BP SAFETY CHAIN	
12	225160946	BP CARDAN TUBE	
13	517050030	BP SAFETY CONE	Rev. 2
13	517050004	RPBY 517050030	(Obsolete) Rev 1; Use up stock
14	236630876	BP SAFETY TUBE	
15	255060005	BP INNER BRG	
16	239006812	BP RING NUT	
17	224210939	BP CARDAN TUBE	
18	204066851	BP OUTER TUBE YOKE	
19	341042000	BP ROLL PIN	
20	5720H3776	RPBY 5720H3755	
21	403000001	BP COMPLETE PUSH BUTTON	
22	240002461	BP QUICK DISCONNECT KIT	
23	399143000	RPBY 818-152C	
24	399141000	RPBY 818-540C	

Driveline Conv. 1000 RPM (826-113C) (S/N 115261+)

Applies to Models: RCFM45180

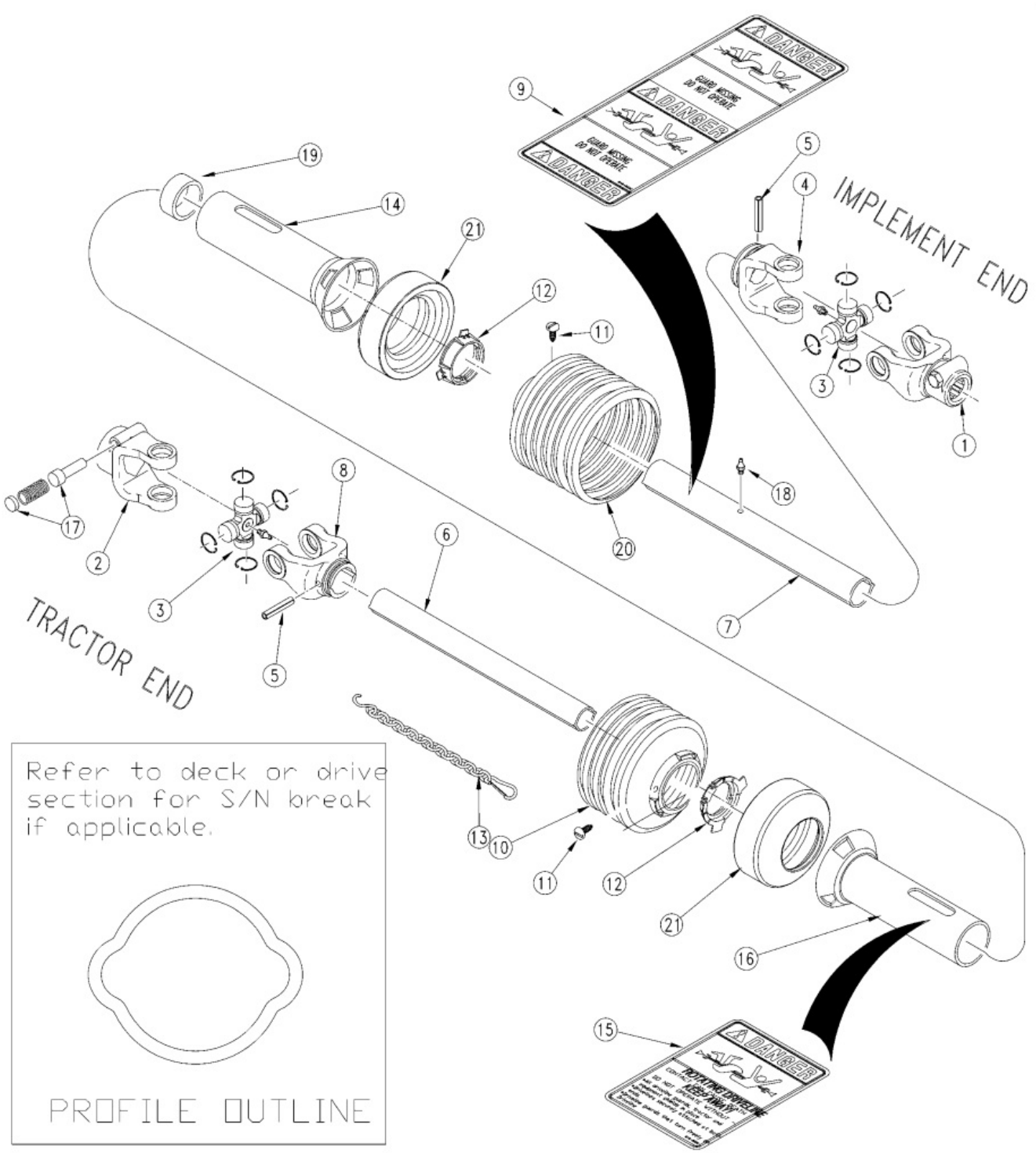

Driveline Conv. 1000 RPM (826-113C) (S/N 115261+)

Applies to Models: RCFM45180

Ref.	Part No.	Part Description	Comments
	DWG 12386	Drawing Image Number	
	826-113C	DRVLN C4 44 1.38-21 QD *	
1	331053	WS YOKE 1 3/4-20 SPL.I.C. 2500	
2	133844	WS YOKE 1 3/8-21 ASGE	
2	019516	RPBY 133844	
3	312410	WS CROSS BRG KIT	
4	019519	WS INBOARD YOKE	
5	020617	WS SPRING PIN 10 X 20	
6	081133	WS INNER PROFILE	
7	385911	WS PROF & SLV 965MM	
8	019518	WS INBOARD YOKE	
9	818-540C	DECAL DANGER GUARD MISS PTO	
10	377336	WS SHIELD CONE 6 RIB	
11	365305	WS SCREW	
12	087276	WS BRG RING - SC25	
13	044321	DRIVELINE SHIELD SAFETY CHAIN	
14	384064	WS IN SHIELD RND 890MM	
15	818-552C	DECAL DANGER PTO DRIVELINE	
16	389849	WS OUT SHLD OVL 895MM	Obsolete
17	339107	WS Q.D. PIN KIT	
18	380371	WS ZERK	
19	355155	WS SUPPORT BRG	
20	377341	WS SHIELD CONE 11 RIB	
21	359471	WS REINFORCING COLLAR	As Required

Driveline Conv. 540 RPM (826-083C) (S/N 115260-)

Applies to Models: RCF45180

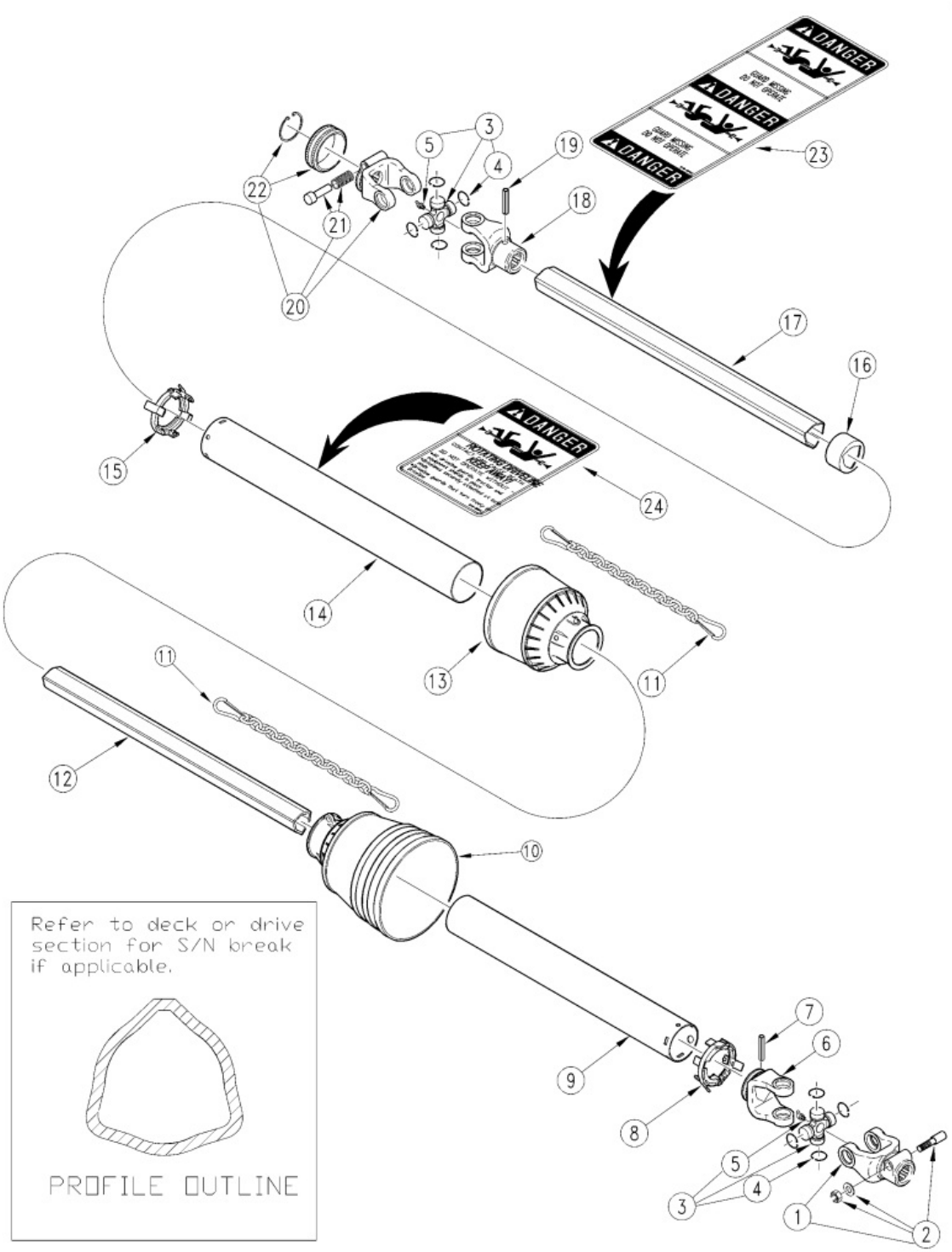

Driveline Conv. 540 RPM (826-083C) (S/N 115260-)

Applies to Models: RCF45180

Ref.	Part No.	Part Description	Comments
	DWG11139	Drawing Image Number	
	826-083C	RPBY 826-112C *	Obsolete
1	509083855	BP YOKE	
2	408000041	RPBY 408000061	
3	41208	BP CROSS JOURNAL ASSY	
4	338023000	BP SNAP RING	
5	348004000	RPBY 084099	
6	204086861	BP INNER TUBE YOKE	
7	341055000	BP ROLL PIN	
8	255080006	BP INNER BRG	
9	237005408	BP SAFETY TUBE	
10	517080080	RPBY 517080124	
11	252000005	RPBY 044321	
12	225690823	BP CARDAN TUBE	
13	517080082	BP CONE WITH COLLAR	
14	236640744	BP SAFETY TUBE	
15	255080005	BP OUTER BRG	
16	239006812	BP RING NUT	
17	224730815	BP CARDAN TUBE	
18	204086860	BP OUTER TUBE YOKE	
19	341054000	BP ROLL PIN	
20	572080351	RPBY 5720M0376	
21	403000001	BP COMPLETE PUSH BUTTON	
22	240080061	BP HUB	
23	399143000	RPBY 818-152C	
24	399141000	RPBY 818-540C	

Driveline Conv. 540 RPM (826-112C) (S/N 115261+)

Applies to Models: RCF45180

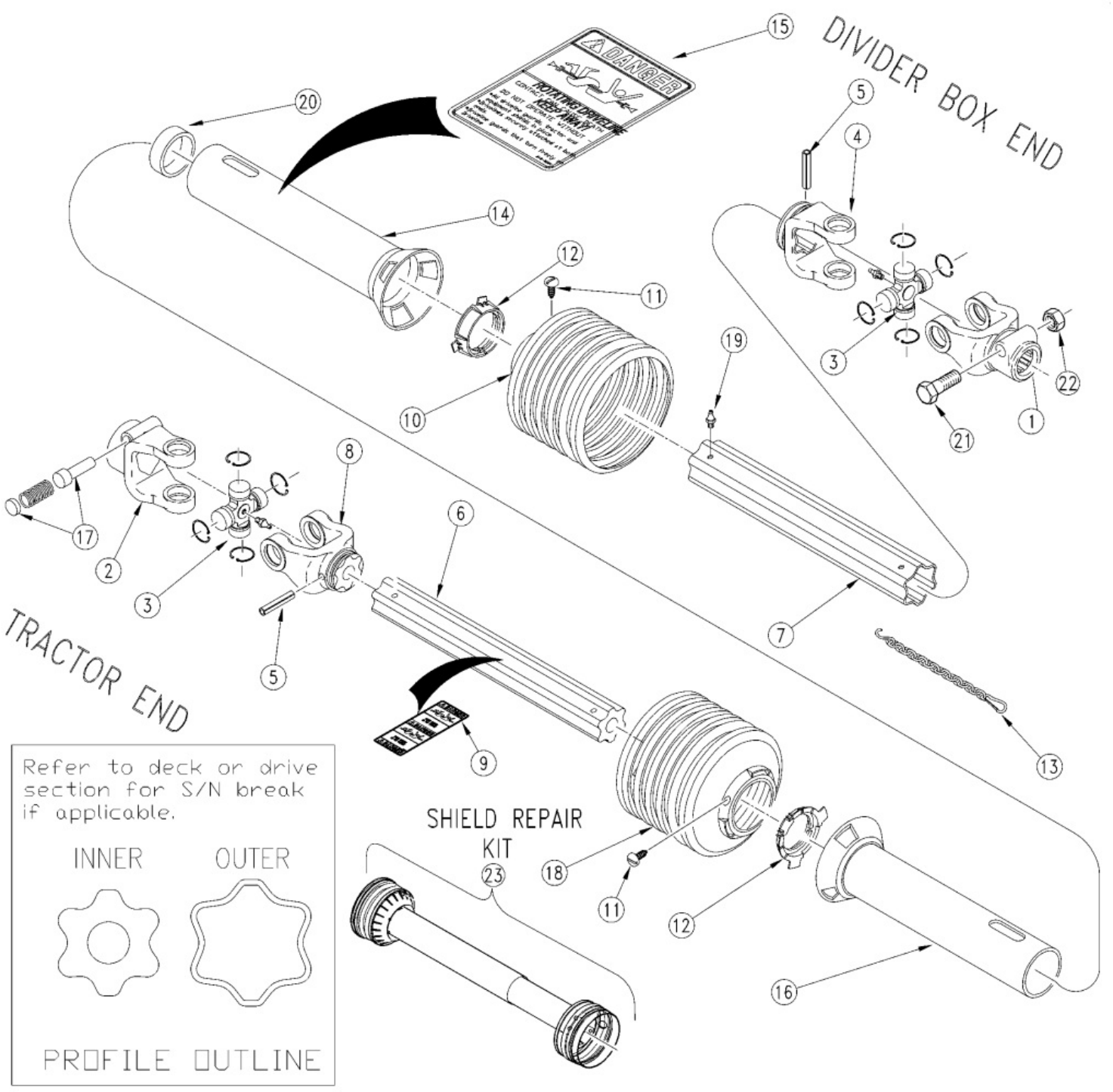

Driveline Conv. 540 RPM (826-112C) (S/N 115261+)

Applies to Models: RCF45180

Ref.	Part No.	Part Description	Comments
	DWG 12387	Drawing Image Number	
	826-112C	DRVLN C5 40 1.38-6 QD *	Complete assembly
1	325027	WS YOKE 1 3/4-20 SPL.I.C. 2500	
2	097136	RPBY 362428	
3	312209	WS CROSS & BRG KIT 2500	
4	097140	WS INBOARD YOKE S5	
5	304046	WS SPRING PIN 10 X 90	
6	321256	WS IN PROF 2400 (699713) 860MM	
7	390257	WS PROF&SLV W.A. 845MM	
8	097133	WS INBOARD YOKE S4	
9	818-540C	DECAL DANGER GUARD MISS PTO	
10	377442	WS SHIELD CONE - 12 RIB	
11	365305	WS SCREW	
12	087276	WS BRG RING - SC25	
13	044321	DRIVELINE SHIELD SAFETY CHAIN	
14	389850	WS OUT SHLD RND (391409) 770MM	
15	818-552C	DECAL DANGER PTO DRIVELINE	
16	388957	RPBY 371918	Obsolete
17	339107	WS Q.D. PIN KIT	
18	377437	WS SHIELD CONE 7 RIB	
19	380371	WS ZERK	
20	355155	WS SUPPORT BRG	
21	702352	WS HEX BOLT M16 X 90 GR 8.8	
22	304011	WS LOCK NUT M16	
23	826-587C	SHIELD KIT, 826-112C	

Driveline CV 1000 RPM (826-077C) (S/N 82427-)

Applies to Models: RCFM45180

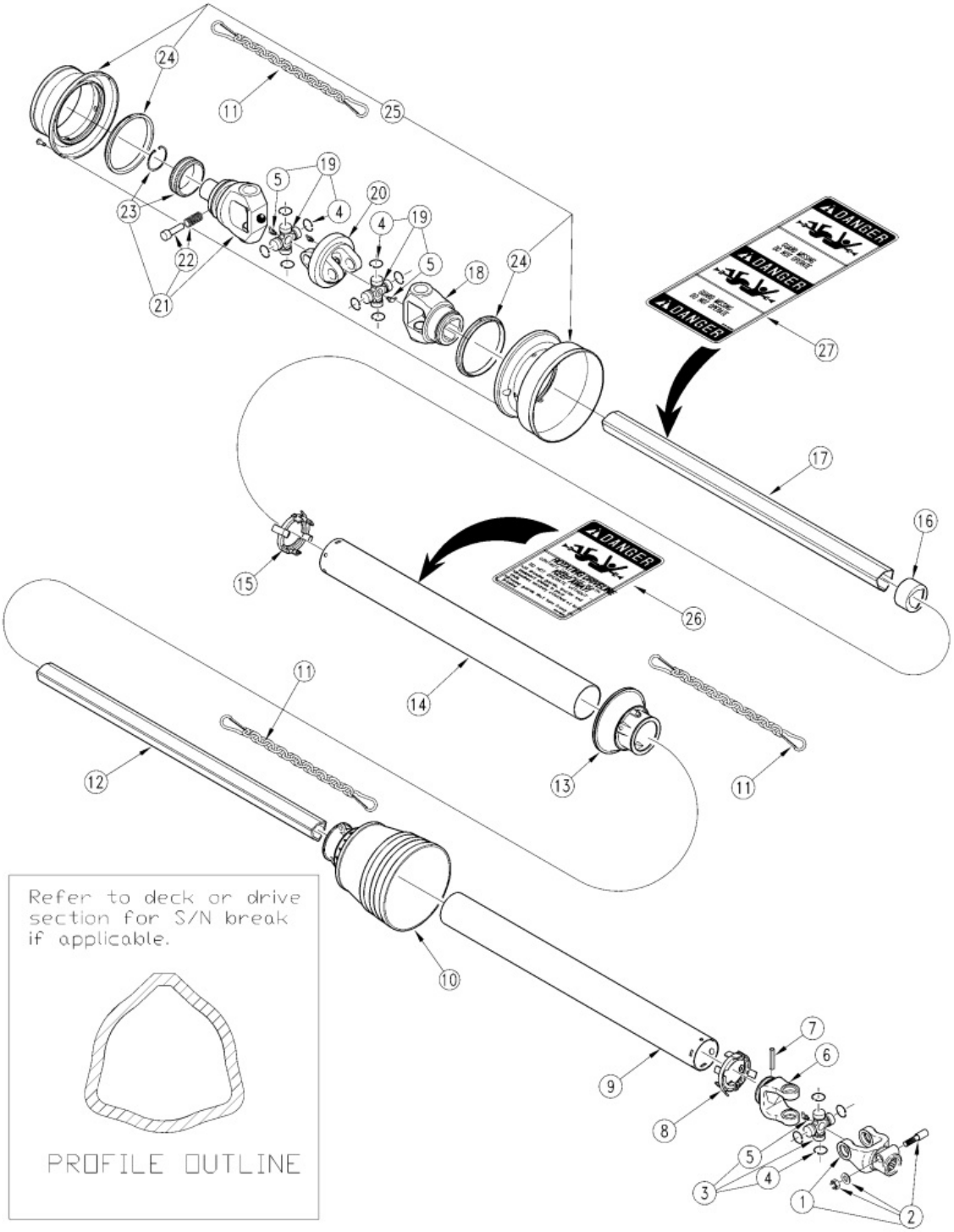

Driveline CV 1000 RPM (826-077C) (S/N 82427-)

Applies to Models: RCFM45180

Ref.	Part No.	Part Description	Comments
	DWG 14370	Drawing Image Number	
	826-077C	RPBY 826-099C *	Obsolete
1	509063854	BP YOKE	
2	408000041	RPBY 408000061	
3	41206	BP CROSS JOURNAL ASSY	
4	338020000	BP SNAP RING	
5	348004000	RPBY 084099	
6	204066852	BP INNER TUBE YOKE	
7	341043000	BP ROLL PIN	
8	255060006	BP INNER BRG	
9	237005356	BP SAFETY TUBE	
10	517050009	RPBY 517050024	
11	252000001	BP SAFETY CHAIN	
12	270060833	BP CARDAN TUBE	Rev. 2
12	244160833	RPBY 270060833	(Obsolete) Rev 1; Use up stock
13	254050029	BP SAFETY CONE	
14	236830775	BP SAFETY TUBE	
14	236630771	RPBY 236830775	Obsolete
15	255060005	BP INNER BRG	
16	259006802	BP RING NUT	
17	224210834	BP CARDAN TUBE	
18	215066872	BP YOKE	
18	215066854	RPBY 215066872	Obsolete
19	412060012	BP CROSS JOURNAL ASSY	
20	511060051	BP CENTRAL BODY	
21	573063781	BP YOKE W/COLLAR/BALL KIT	Twist Collar
21	573063775	RPBY 573063781	(Obsolete) Ball Collar
21	435000302R	BP YOKE REPAIR KIT	Repair Kit For 573063781
22	403000013	BP COMPLETE PUSH BUTTON	
23	240080061	BP HUB	
24	255060006	BP INNER BRG	
25	517068051	BP COMPLETE SHELL	
26	399141000	RPBY 818-540C	
27	399143000	RPBY 818-152C	

Driveline CV 1000 RPM (826-099C) (S/N 82428 to 115260)

Applies to Models: RCFM45180

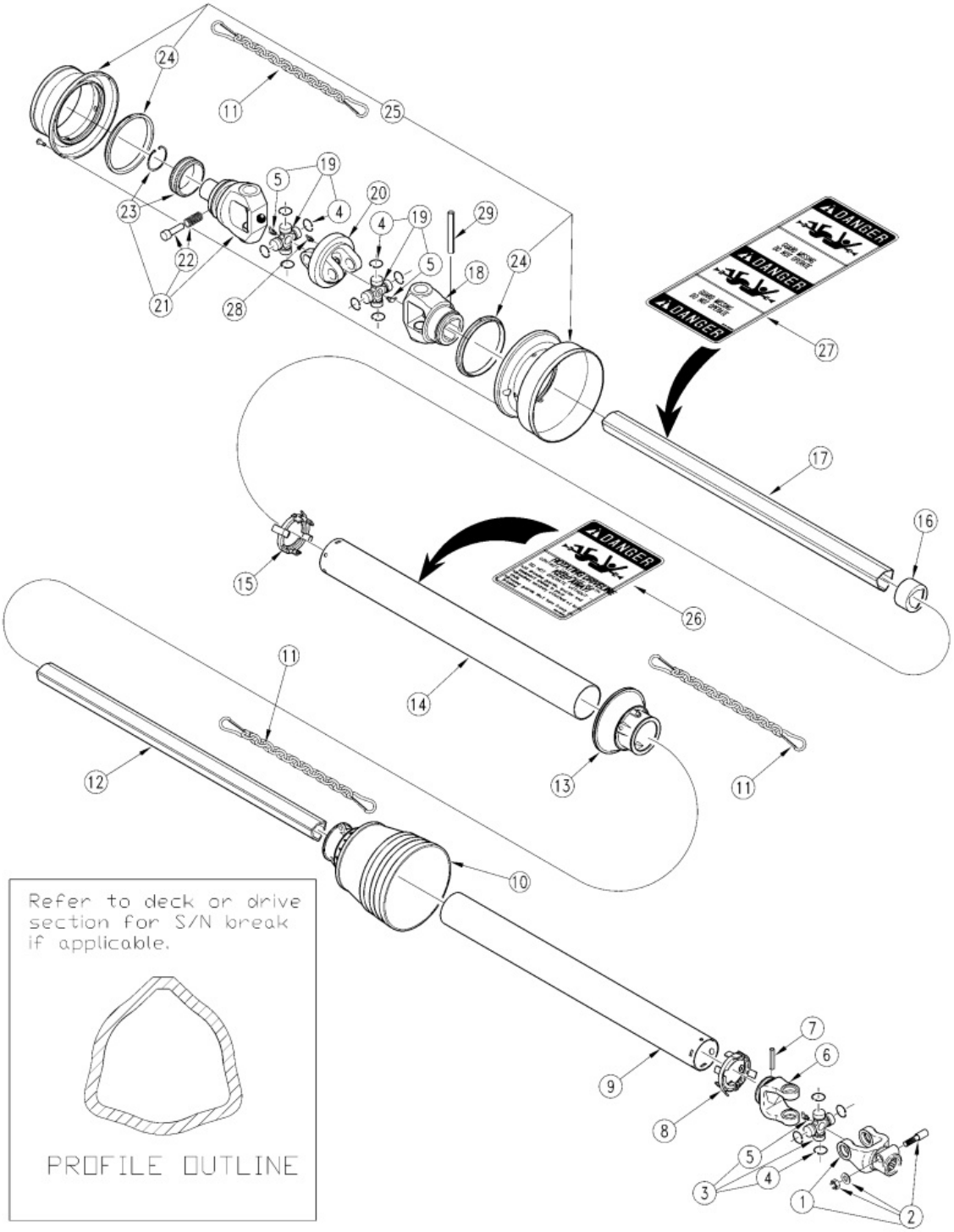

Driveline CV 1000 RPM (826-099C) (S/N 82428 to 115260)

Applies to Models: RCFM45180

Ref.	Part No.	Part Description	Comments
	DWG 11115	Drawing Image Number	
	826-099C	RPBY 826-644C *	Obsolete
1	509063854	BP YOKE	
2	408000041	RPBY 408000061	
3	41206	BP CROSS JOURNAL ASSY	
4	338020000	BP SNAP RING	
5	348004000	RPBY 084099	
6	204066852	BP INNER TUBE YOKE	
7	341043000	BP ROLL PIN	
8	255060006	BP INNER BRG	
9	237005356	BP SAFETY TUBE	
10	517050009	RPBY 517050024	
11	252000001	BP SAFETY CHAIN	
12	245160836	BP CARDAN TUBE	
13	254050029	BP SAFETY CONE	
14	236830775	BP SAFETY TUBE	
14	236630771	RPBY 236830775	Obsolete
15	255060005	BP INNER BRG	
16	259006803	BP RING NUT	
17	224270834	BP CARDAN TUBE	
18	215066872	BP YOKE	
18	215066854	RPBY 215066872	Obsolete
19	412060012	BP CROSS JOURNAL ASSY	
20	511060051	BP CENTRAL BODY	
21	573063781	BP YOKE W/COLLAR/BALL KIT	Twist Collar
21	573063775	RPBY 573063781	(Obsolete) Ball Collar
21	435000302R	BP YOKE REPAIR KIT	Repair Kit For 573063781
22	403000013	BP COMPLETE PUSH BUTTON	
23	240080061	BP HUB	
24	255060351	BP RING NUT DOWELS	
25	517068051	BP COMPLETE SHELL	
26	399143000	RPBY 818-152C	
27	399141000	RPBY 818-540C	
28	348017000	BP GREASE ZERK #6X1	
29	341042000	BP ROLL PIN	

Driveline CV 1000 RPM (826-118C) (S/N 115261+)

Applies to Models: RCFM45180

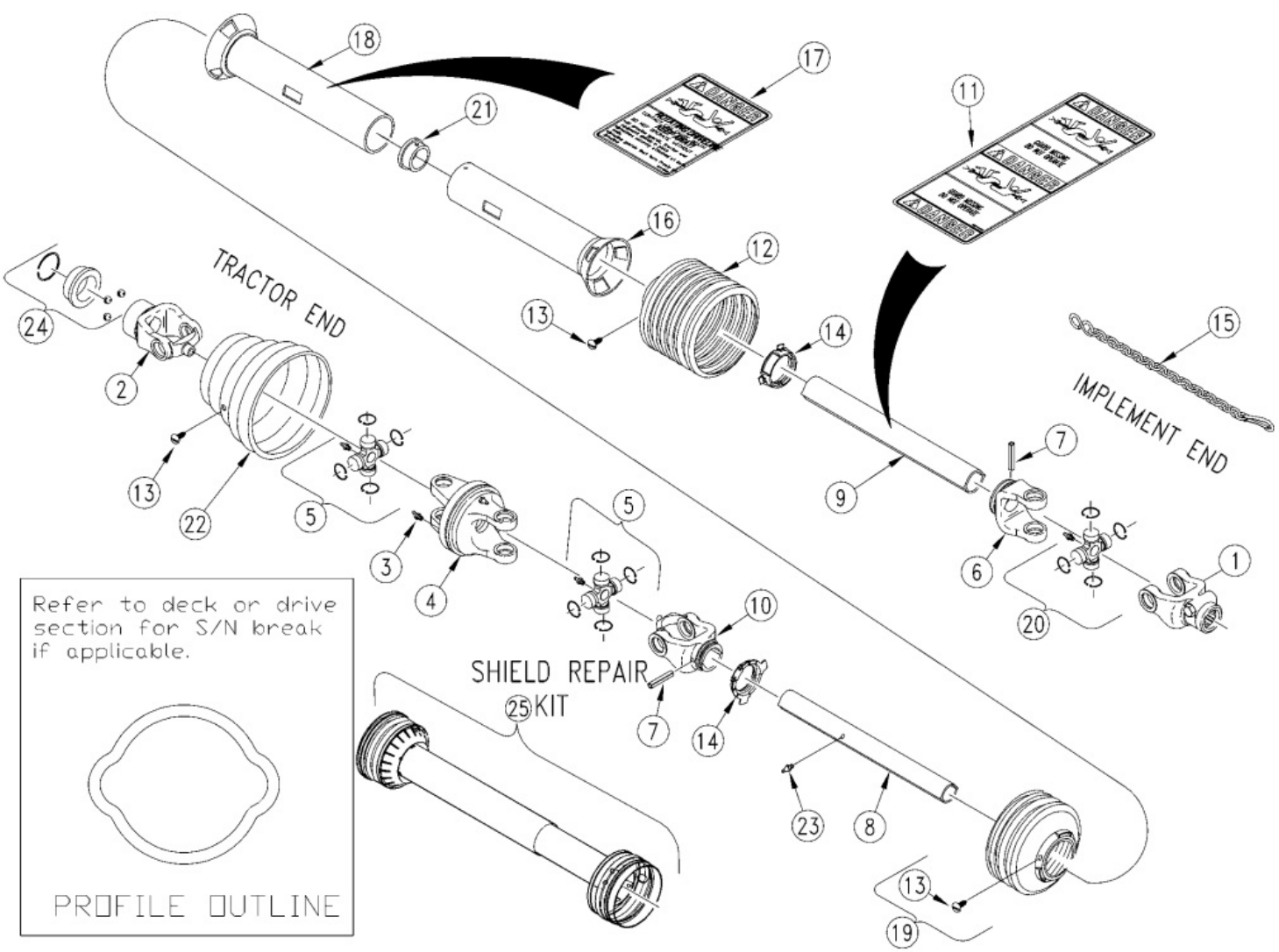

Driveline CV 1000 RPM (826-118C) (S/N 115261+)

Applies to Models: RCFM45180

Ref.	Part No.	Part Description	Comments
	DWG14066	Drawing Image Number	
	826-118C	DRVLN C4 50 1.38-21 CV *	
1	331053	WS YOKE 1 3/4-20 SPL.I.C. 2500	
2	695581	WS YOKE 1 3/8-21 ASGE	
2	380883	RPBY 695581	Obsolete
3	020672	REP BY 6560208	
4	365722	WS DOUBLE YOKE	
5	342221	WS CROSS & BRG KIT	
6	019519	WS INBOARD YOKE	
7	020617	WS SPRING PIN 10 X 20	
8	320428	WS INNER PROFILE 16GA (316201)	
8	095758	RPBY 320428	Obsolete
9	383879	WS PROFILE & SLEEVE W.A.	
9	382647	RPBY 383879	Obsolete
10	134713	WS INBOARD YOKE 1B	
10	341586	RPBY 134713	Obsolete
11	818-540C	DECAL DANGER GUARD MISS PTO	
12	377341	WS SHIELD CONE 11 RIB	
13	365305	WS SCREW	
14	087276	WS BRG RING - SC25	
15	044321	DRIVELINE SHIELD SAFETY CHAIN	
16	383878	WS INNER SHIELD TUBE ROUND	
16	382437	RPBY 383878	Obsolete
17	818-552C	DECAL DANGER PTO DRIVELINE	
18	389548	WS OUTER SHIELD TUBE OVAL	
18	389851	RPBY 389548	Obsolete
19	172758	WS SHIELD CONE 3 RIB	
20	312410	WS CROSS BRG KIT	
21	355155	WS SUPPORT BRG	
22	386083	WS CV CONE & BRG ASSY	
23	380371	WS ZERK	
24	390404	WS ASGE COLLAR KIT	
24	381908	RPBY 390404	Obsolete
25	826-591C	SHIELD KIT, 826-118C	

Driveline CV 1000 RPM (826-244C) Walterscheid

Applies to Models: RCFM45180

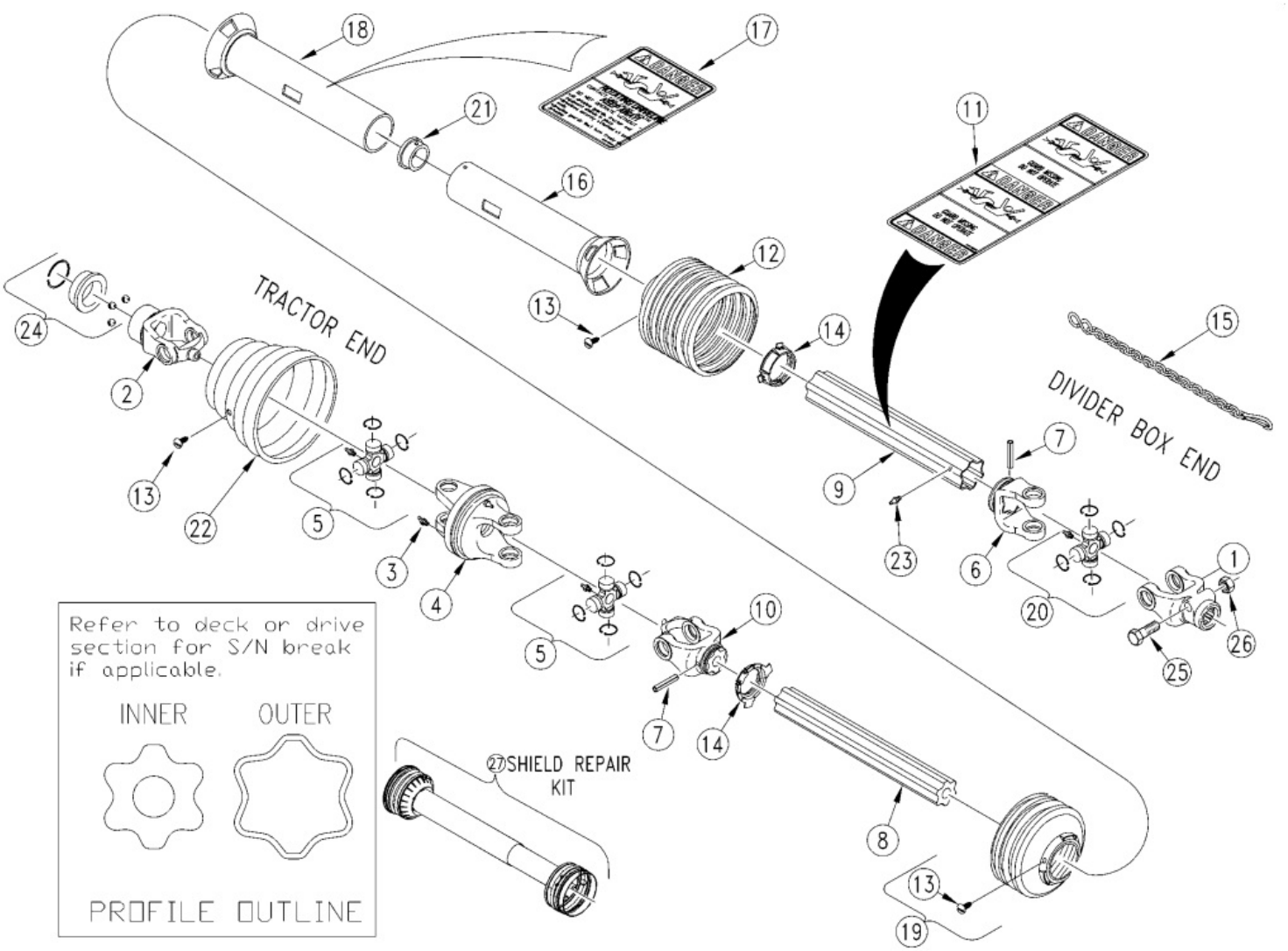

Driveline CV 1000 RPM (826-244C) Walterscheid

Applies to Models: RCFM45180

Ref.	Part No.	Part Description	Comments
	DWG14067	Drawing Image Number	
	826-244C	RPBY 826-477C *	Obsolete
1	325027	WS YOKE 1 3/4-20 SPL.I.C. 2500	
2	363696	RPBY 396454	
3	020672	REP BY 6560208	
4	365725	WS DOUBLE YOKE 2500	
5	384316	WS CROSS & BRG KIT 2500	
6	097140	WS INBOARD YOKE S5	
7	304046	WS SPRING PIN 10 X 90	
8	381367	WS IN PROF S4GA (330162) 840MM	
9	388204	WS PROF&SLV W.A. 830MM	
10	135294	WS INBOARD YOKE S4	
10	331573	RPBY 135294	Obsolete
11	818-540C	DECAL DANGER GUARD MISS PTO	
12	377442	WS SHIELD CONE - 12 RIB	
13	365305	WS SCREW	
14	087276	WS BRG RING - SC25	
15	044321	DRIVELINE SHIELD SAFETY CHAIN	
16	387097	WS IN SHIELD RND 750MM	
17	818-552C	DECAL DANGER PTO DRIVELINE	
18	391406	WS OUT SHLD OVL 755MM	
19	104810	WS SHIELD CONE 4 RIB	
20	312209	WS CROSS & BRG KIT 2500	
21	355155	WS SUPPORT BRG	
22	386048	WS CV CONE & BRG ASSY	
23	380371	WS ZERK	
24	364915	WS ASSY COLLAR KIT	
25	702352	WS HEX BOLT M16 X 90 GR 8.8	
26	304011	WS LOCK NUT M16	
27	826-592C	SHIELD KIT, 826-182C &826-244C	

Driveline CV 1000 RPM (826-477C) Comer (Service Only)

Applies to Models: RCFM45180

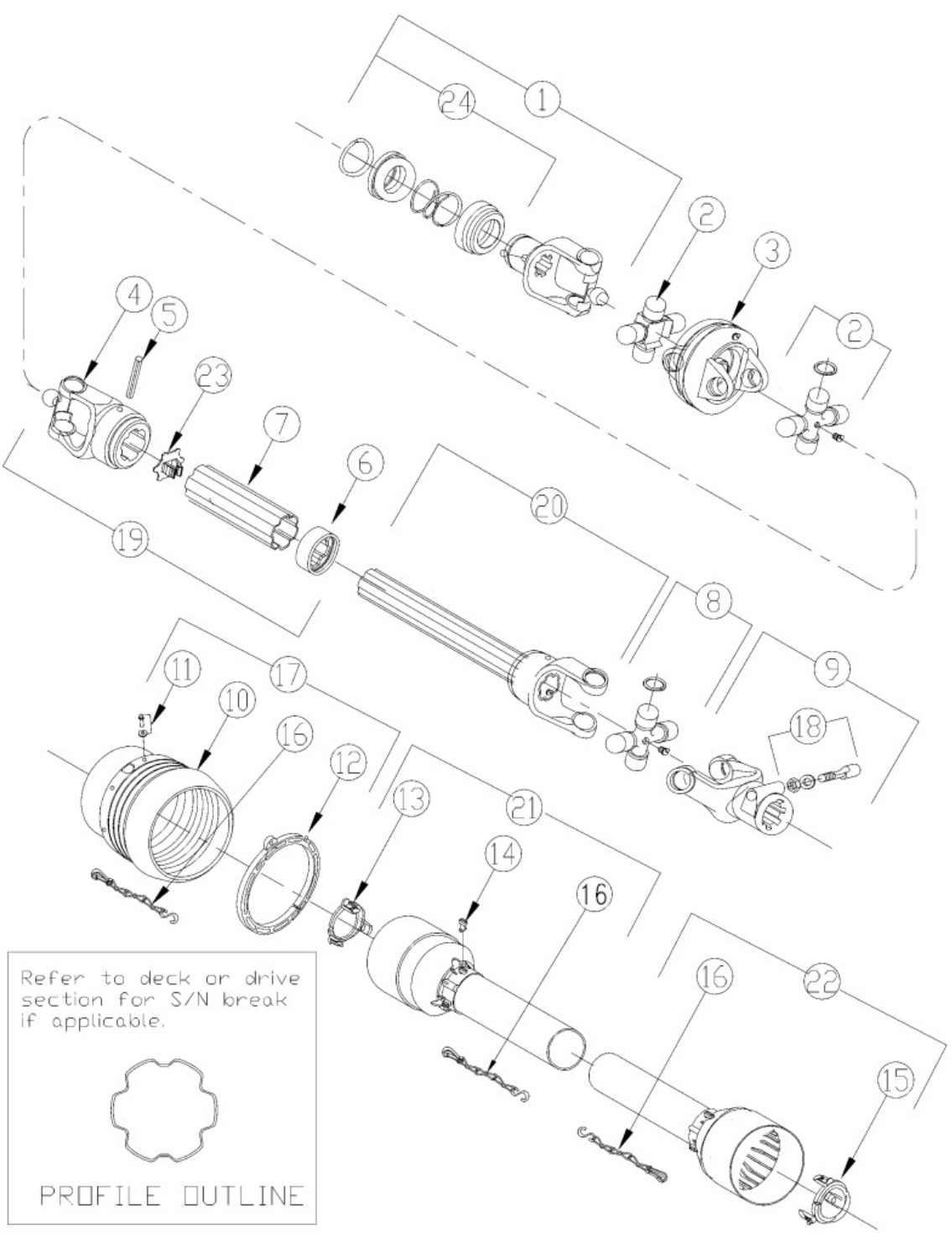

Driveline CV 1000 RPM (826-477C) Comer (Service Only)

Applies to Models: RCFM45180

Ref.	Part No.	Part Description	Comments
	DWG23948	Drawing Image Number	
	826-477C	RPBY 826-644C *	Obsolete
1	141.028.359.1	COMER CV-JOINT YOKE COLLER	
2	180.018.158	COMER CV -JOINT CROSS ASSEMBLY	
3	141.028.472.1	COMER WIDE ANGLE DOUBLE YOKE	
4	141.028.248.1	COMER OUTER YOKE	
5	190.000.243	COMER OUTER TUBE ROLL PIN	
6	180.018.437	COMER WIPER	
7	1522805260710	COMER OUTER TUBE COMPLETE	
8	180.018.004	COMER CROSS ASSEMBLY	
9	141.028.195.1	COMER YOKE COMPLETE	
10	180.028.604	COMER CV JOINT GUARD CONE	
10	180.018.567	RPBY 180.028.604	Obsolete
11	165.000.694	COMER SCREW FOR CV GUARD	
12	158.018.470	COMER BRG RING	
13	180.018.251	COMER RETAINING COLLER INNER	
14	180.014.240	COMER BOLT	
15	180.018.252	COMER RETAINING COLLER INNER	
16	180.016.025	RPBY 044321	
17	165.000.785	COMER CONE GUARD ASSEMBLY	
18	165.000.589	COMER TAPERED PIN SET 1 3/4	
19	122.981.002.1	COMER TUBE W/YOKE/LUBE/FEMALE	
20	122.580.501.1	COMER TUBE W/YOKE/LUBE/MALE	
21	1422831442821	COMER HALF FEMALE GRD W/LABEL	
22	1422871642821	COMER HALF MALE GUARDING	
23	180.018.393	COMER CAP OUTER TUBE, PLASTIC	
24	165.000.628	COMER COLLAR KIT 1 3/8 YOKE	

Driveline CV 540 RPM (826-076C) (S/N 82427-)

Applies to Models: RCF45180

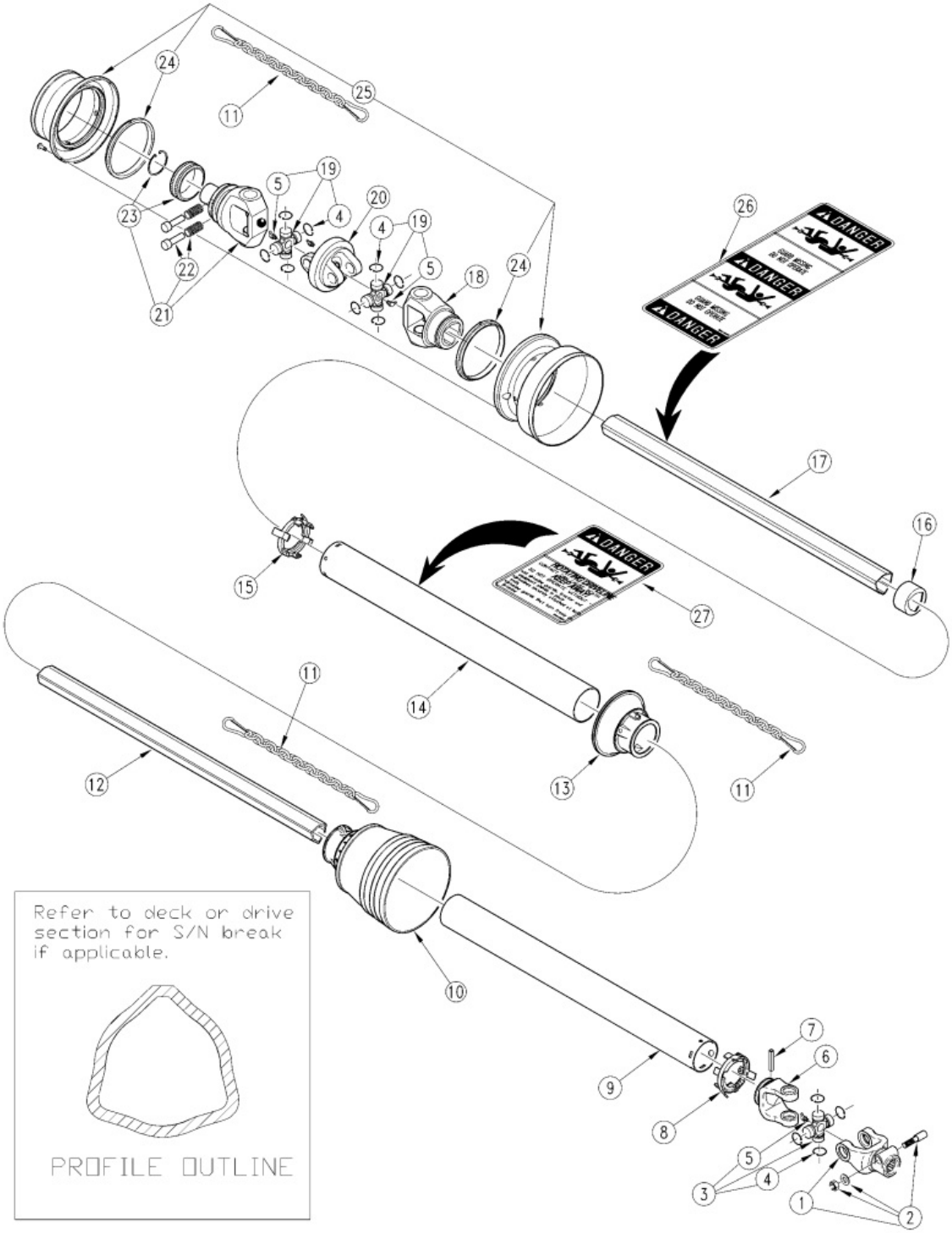

Driveline CV 540 RPM (826-076C) (S/N 82427-)

Applies to Models: RCF45180

Ref.	Part No.	Part Description	Comments
	DWG 14366	Drawing Image Number	
	826-076C	RPBY 826-098C *	Obsolete
1	509083855	BP YOKE	
2	408000041	RPBY 408000061	
3	41208	BP CROSS JOURNAL ASSY	
4	338023000	BP SNAP RING	
5	34800400	BP GREASE ZERK	
6	204086861	BP INNER TUBE YOKE	
7	341055000	BP ROLL PIN	
8	255080006	BP INNER BRG	
9	237005407	BP SAFETY TUBE	Obsolete
10	517080080	RPBY 517080124	
11	252000005	RPBY 044321	
12	245690713	OUTER TB(1528084) 780MM	Rev. 4
12	270690713	RPBY 245690713	(RPBY 245690713) Rev 3; Use up stock
12	270080713	RPBY 270690713	(RPBY 270690713) Rev 2; Use up stock
12	244690713	RPBY 245690713	(RPBY 270690713) Rev 1; Use up stock
13	254080029	BP SAFETY CONE	
14	236640640	BP SAFETY TUBE	Obsolete
15	255080005	BP OUTER BRG	
16	239006812	BP RING NUT	
17	224730710	BP CARDAN TUBE	
18	215086854	BP YOKE	
19	412080012	BP CROSS JOURNAL ASSY	
20	511080051	BP CENTRAL BODY	
21	573080399	BP YOKE WITH BRIDGE	
21	573080375	RBPY 573080399	Obsolete
22	403000001	BP COMPLETE PUSH BUTTON	
23	240080061	BP HUB	
24	255080351	BP RING NUT DOWELS	
25	517088051	RPBY 517088001	
26	399143000	RPBY 818-152C	
27	399141000	RPBY 818-540C	

Driveline CV 540 RPM (826-098C) (S/N 82428 to 115260)

Applies to Models: RCF45180

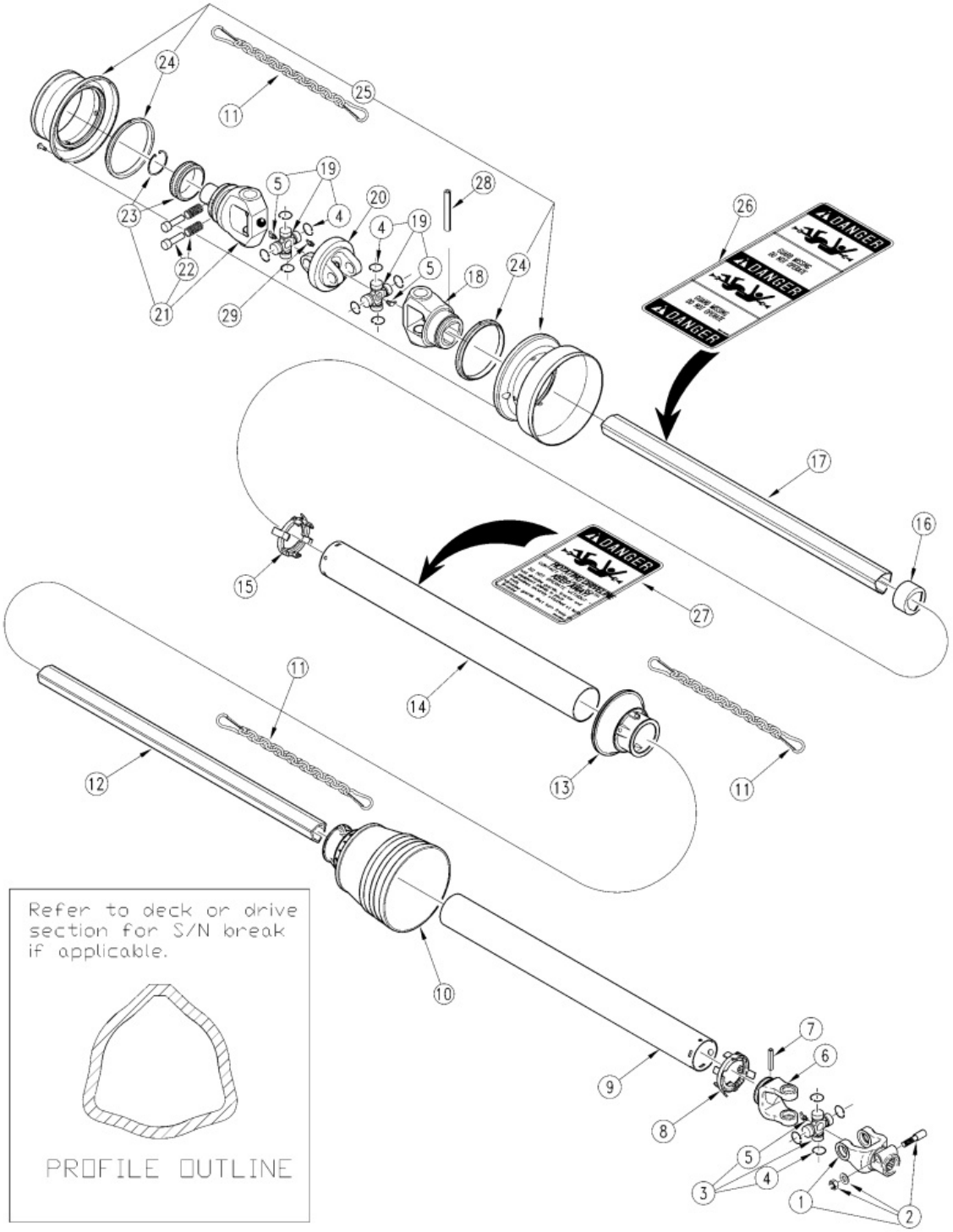

Driveline CV 540 RPM (826-098C) (S/N 82428 to 115260)

Applies to Models: RCF45180

Ref.	Part No.	Part Description	Comments
	DWG 11137	Drawing Image Number	
	826-098C	RPBY 826-117C *	Obsolete
1	509083855	BP YOKE	
2	408000041	RPBY 408000061	
3	41208	BP CROSS JOURNAL ASSY	
4	338023001	BP SNAP RING	
5	348004000	RPBY 084099	
6	204086861	BP INNER TUBE YOKE	
7	341055000	BP ROLL PIN	
8	255080006	BP INNER BRG	
9	237005407	BP SAFETY TUBE	Obsolete
10	517080080	RPBY 517080124	
11	252000005	RPBY 044321	
12	245690713	OUTER TB(1528084) 780MM	
13	254080029	BP SAFETY CONE	
14	236640640	BP SAFETY TUBE	Obsolete
15	255080005	BP OUTER BRG	
16	239006815	BP RING NUT	
17	224380710	BP CARDAN TUBE	
18	215086854	BP YOKE	
19	412080012	BP CROSS JOURNAL ASSY	
20	511080051	BP CENTRAL BODY	
21	573080399	BP YOKE WITH BRIDGE	
21	573080375	RBPY 573080399	Obsolete
22	403000001	BP COMPLETE PUSH BUTTON	
23	240080061	BP HUB	
24	255080351	BP RING NUT DOWELS	
25	517088051	RPBY 517088001	
26	399143000	RPBY 818-152C	
27	399141000	RPBY 818-540C	
28	341055000	BP ROLL PIN	
29	348017000	BP GREASE ZERK #6X1	

Driveline CV 540 RPM (826-117C) (S/N 115261+)

Applies to Models: RCF45180

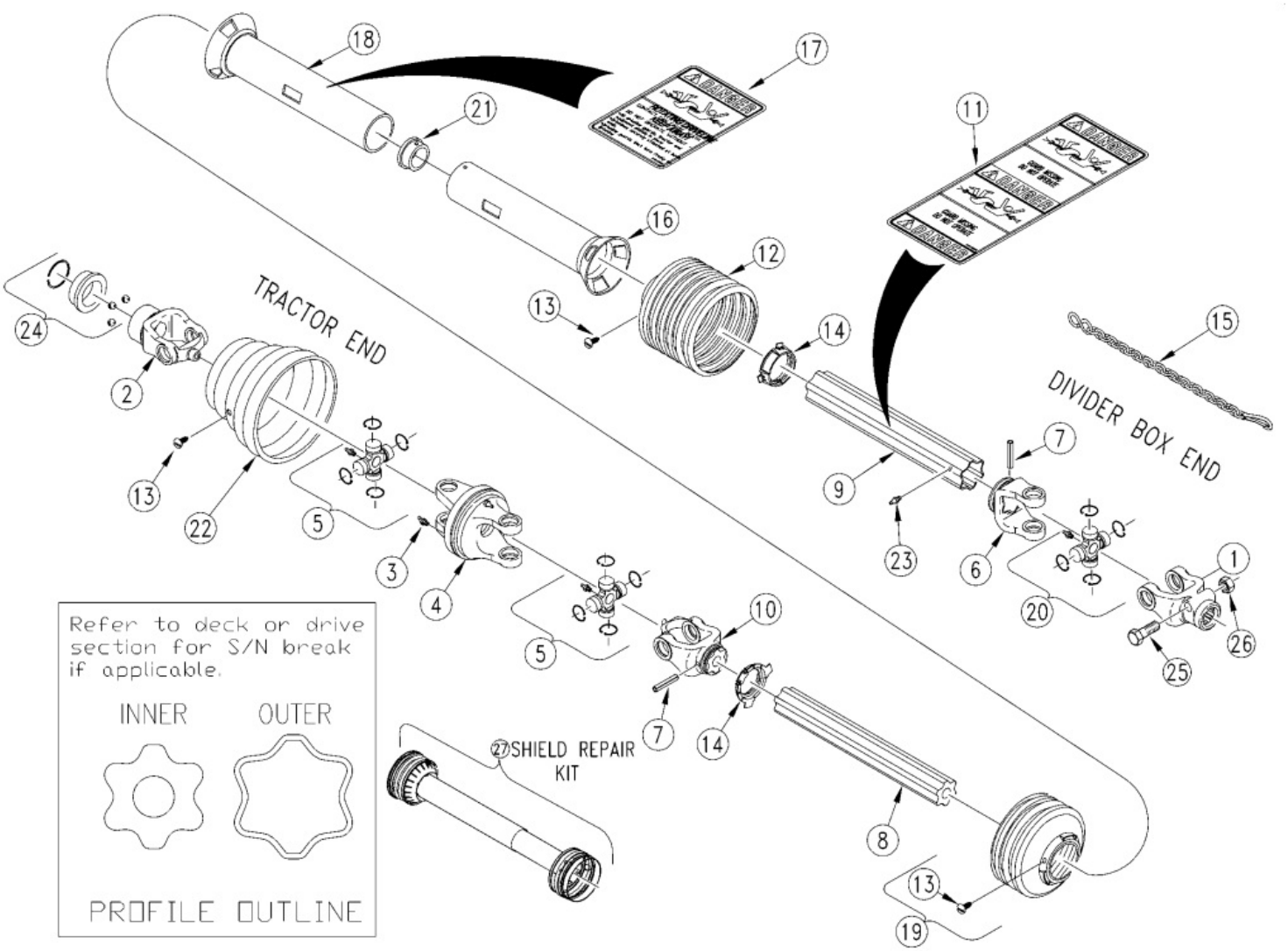

Driveline CV 540 RPM (826-117C) (S/N 115261+)

Applies to Models: RCF45180

Ref.	Part No.	Part Description	Comments
	DWG26857	Drawing Image Number	
	826-117C	RPBY 826-476C *	Obsolete
1	325027	WS YOKE 1 3/4-20 SPL.I.C. 2500	
2	135313	WS YOKE 1 3/8-6 SPLINE	
2	363617	RPBY 135313	Obsolete
3	020672	REP BY 6560208	
4	365725	WS DOUBLE YOKE 2500	
5	384316	WS CROSS & BRG KIT 2500	
6	097140	WS INBOARD YOKE S5	
7	304046	WS SPRING PIN 10 X 90	
8	355527	WS IN PROFILE (330162) 800MM	
9	394526	PROFILE (S5HL) & SLEEVE W.A.	
9	388141	RPBY 394526	Obsolete
10	135294	WS INBOARD YOKE S4	
10	331573	RPBY 135294	Obsolete
11	818-540C	DECAL DANGER GUARD MISS PTO	
12	377442	WS SHIELD CONE - 12 RIB	
13	365305	WS SCREW	
14	087276	WS BRG RING - SC25	
15	044321	DRIVELINE SHIELD SAFETY CHAIN	
16	386345	RPBY 386561	
17	818-552C	DECAL DANGER PTO DRIVELINE	
18	388698	WS OUT SHLD OVL (391409) 705MM	
19	104810	WS SHIELD CONE 4 RIB	
20	312209	WS CROSS & BRG KIT 2500	
21	355155	WS SUPPORT BRG	
22	386048	WS CV CONE & BRG ASSY	
23	380371	WS ZERK	
24	364915	WS ASSY COLLAR KIT	
25	702352	WS HEX BOLT M16 X 90 GR 8.8	
26	304011	WS LOCK NUT M16	
27	826-588C	SHIELD KIT WS, 826-117C	

Driveline CV 540 RPM (826-476C) Comer (Service Only)

Applies to Models: RCF45180

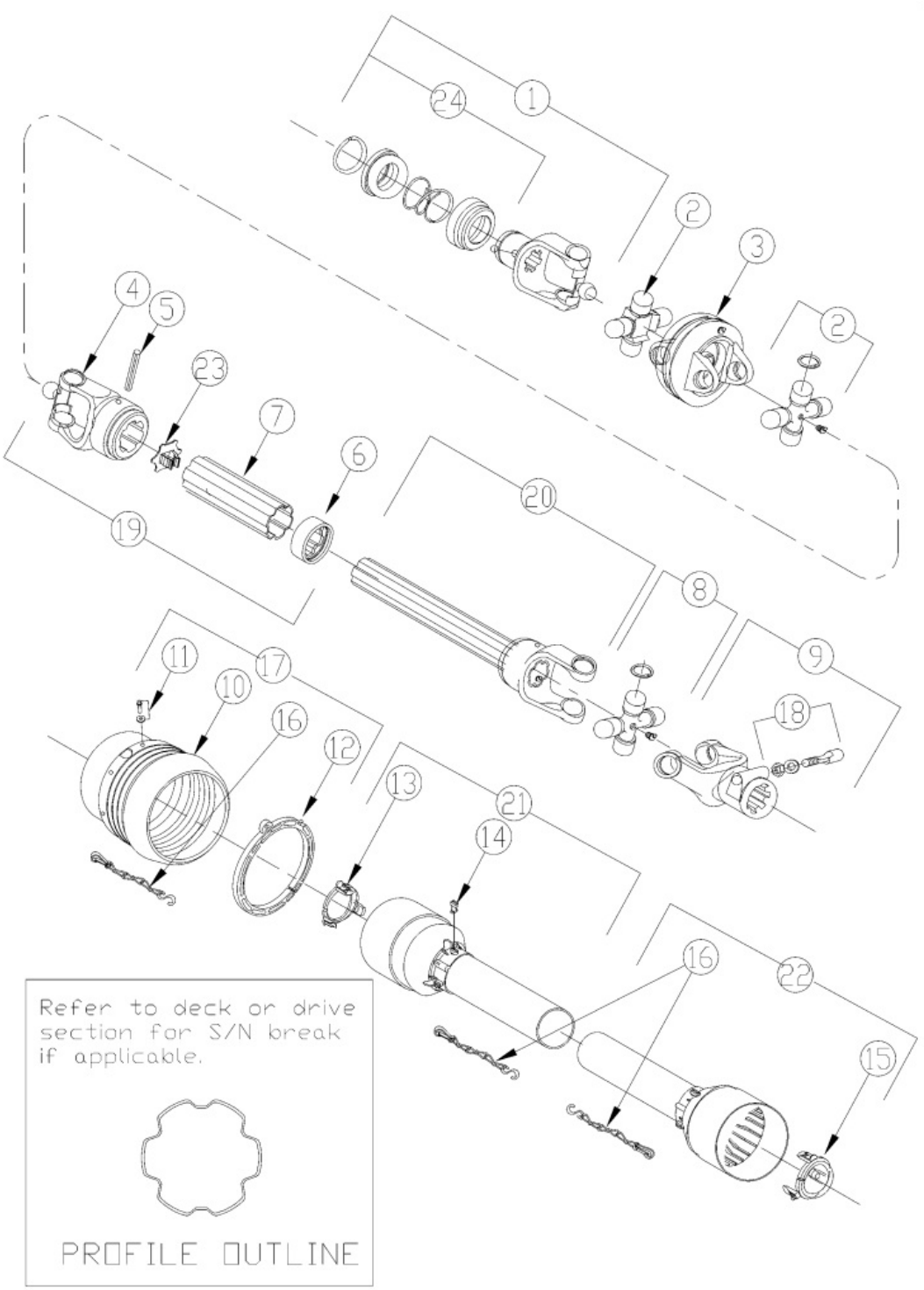

Driveline CV 540 RPM (826-476C) Comer (Service Only)

Applies to Models: RCF45180

Ref.	Part No.	Part Description	Comments
	DWG23947	Drawing Image Number	
	826-476C	RPBY 826-643C *	Obsolete
1	141.028.358.1	COMER COLLER YOKE ASSEMBLY	
2	180.018.158	COMER CV -JOINT CROSS ASSEMBLY	
3	141.028.472.1	COMER WIDE ANGLE DOUBLE YOKE	
4	141.028.248.1	COMER OUTER YOKE	
5	190.000.243	COMER OUTER TUBE ROLL PIN	
6	180.018.437	COMER WIPER	
7	1522805320710	COMER OUTER TUBE	
8	180.018.004	COMER CROSS ASSEMBLY	
9	141.028.195.1	COMER YOKE COMPLETE	
10	180.028.604	COMER CV JOINT GUARD CONE	
10	180.018.567	RPBY 180.028.604	Obsolete
11	165.000.694	COMER SCREW FOR CV GUARD	
12	158.018.470	COMER BRG RING	
13	180.018.251	COMER RETAINING COLLER INNER	
14	180.014.240	COMER BOLT	
15	180.018.252	COMER RETAINING COLLER INNER	
16	180.016.025	RPBY 044321	
17	165.000.785	COMER CONE GUARD ASSEMBLY	
18	165.000.589	COMER TAPERED PIN SET 1 3/4	
19	122.981.027.1	COMER TUBE W/YOKE/LUBE/FEMALE	
20	122.580.510.1	COMER TUBE W/YOKE/LUBE /MALE	
21	1422831412821	COMER HLF FEMALE GRD W/LABEL	
22	1422871632821	COMER HALF MALE GUARDING	
23	180.018.393	COMER CAP OUTER TUBE, PLASTIC	
24	165.000.628	COMER COLLAR KIT 1 3/8 YOKE	

Driveline Slip Clutch (676548303) Bondioli (S/N 82427-)

Applies to Models: RCF45180, RCFM45180

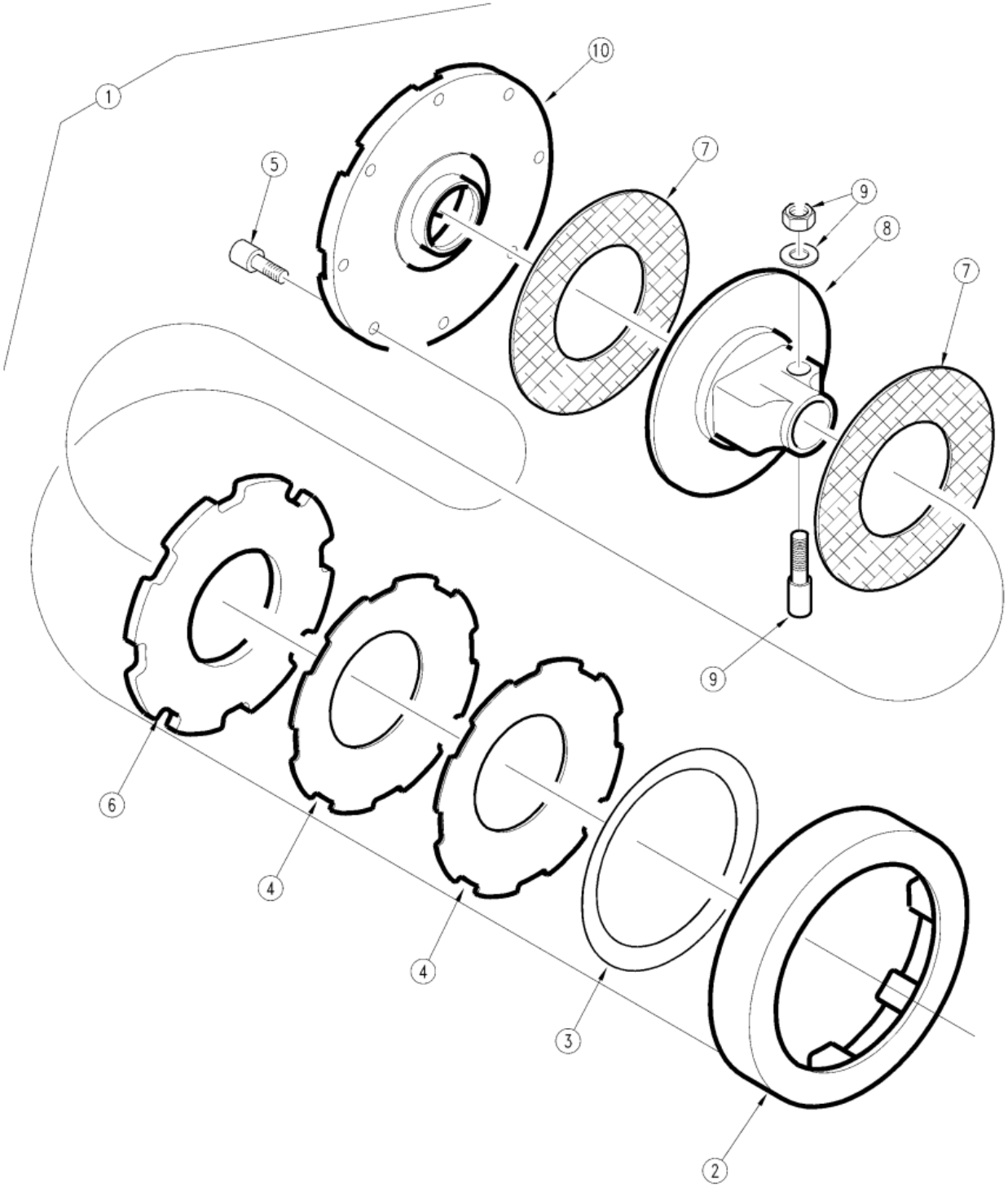

Driveline Slip Clutch (676548303) Bondioli (S/N 82427-)

Applies to Models: RCF45180, RCFM45180

Ref.	Part No.	Part Description	Comments
	DWG11113	Drawing Image Number	
1	663G48403R	BR TORQUE LIMITER	
1	676548303	RPBY 663G48403R	Obsolete
2	264630001	BP CLUTCH OUTER BODY	
3	246000019	BP SCREEN RING	
4	367002630	BP SPRING	
5	303003400	BP SCREW	
6	248630001	BP TIGHTENING PLATE	
7	312-563D	CLUTCH FACING - BP INTERNAL	Rev. 2
7	247006351	RPBY 312-563D	(Obsolete) Rev 1; Use up stock
8	515630301	BP SPLINED HUB	
9	408000033	RPBY 408000062	
10	253056301	BP FLANGE YOKE	

Driveline Slip Clutch (053385)

Applies to Models: RCFM45180

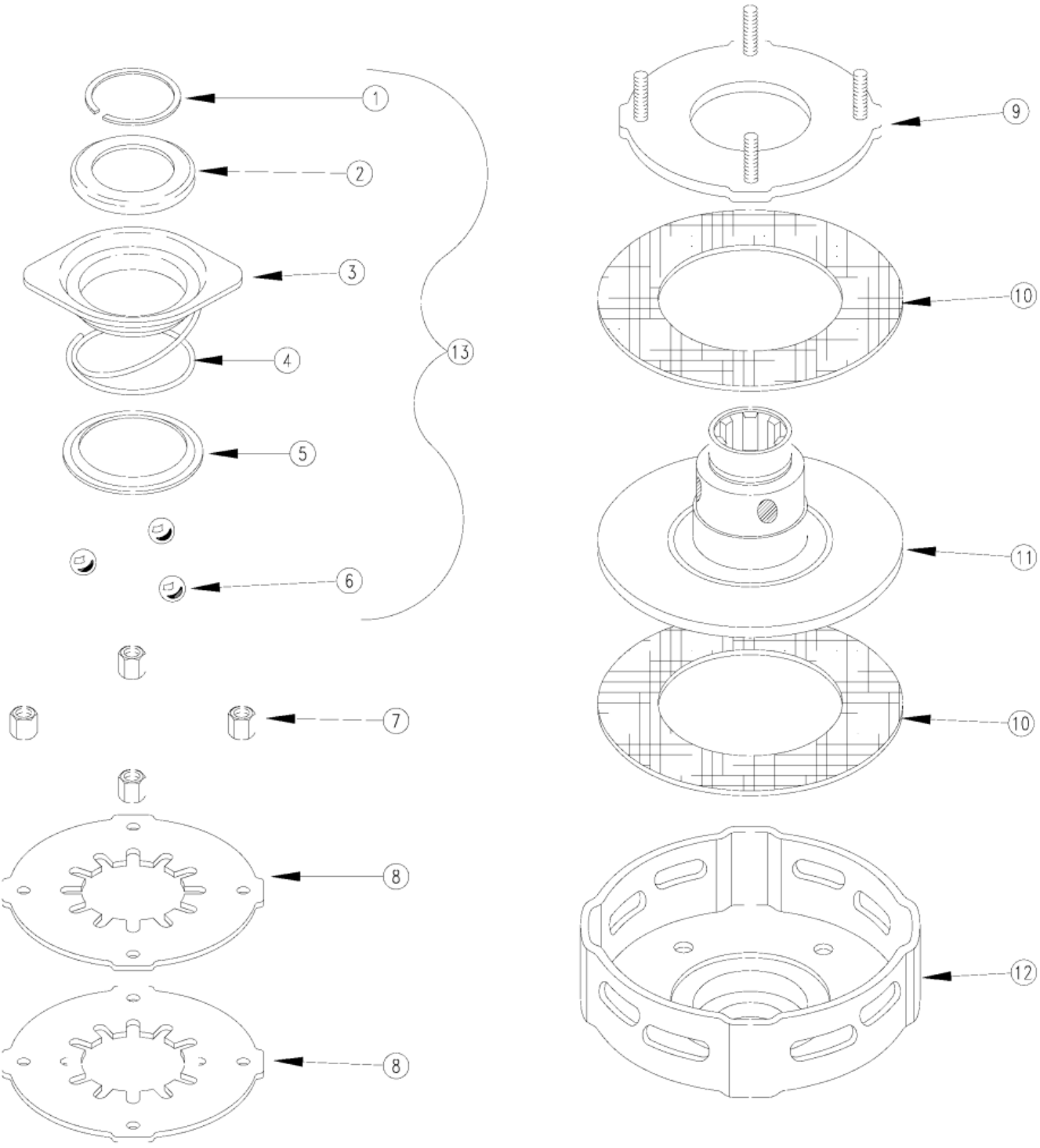

Driveline Slip Clutch (053385)

Applies to Models: RCFM45180

Ref.	Part No.	Part Description	Comments
	DWG12389	Drawing Image Number	
	053385	WS EK92 CLUTCH 900 NM 2400	
1	304149	WS SNAP RING	
2	338531	WS FLANGED RING	
3	045790	WS LOCK COLLAR	
4	045793	WS COMPRESSION SPRNG	
5	047825	WS BACK UP RING	
6	020692	WS BALL	
7	381957	WS HEX NUT M8	
8	043489	WS BELLEVILLE SPRING	
9	381495	WS THRUST PLATE	
10	168556	WS FRICTION DISK	
11	051551	WS HUB 1 3/8-6 SPL	
12	016239	WS CLUTCH HOUSING	
13	341953	WS Q.D. FLG. KIT	

Driveline Slip Clutch (638237001, 638248001 & 638248006) Bondioli

Applies to Models: RCF45180, RCFM45180

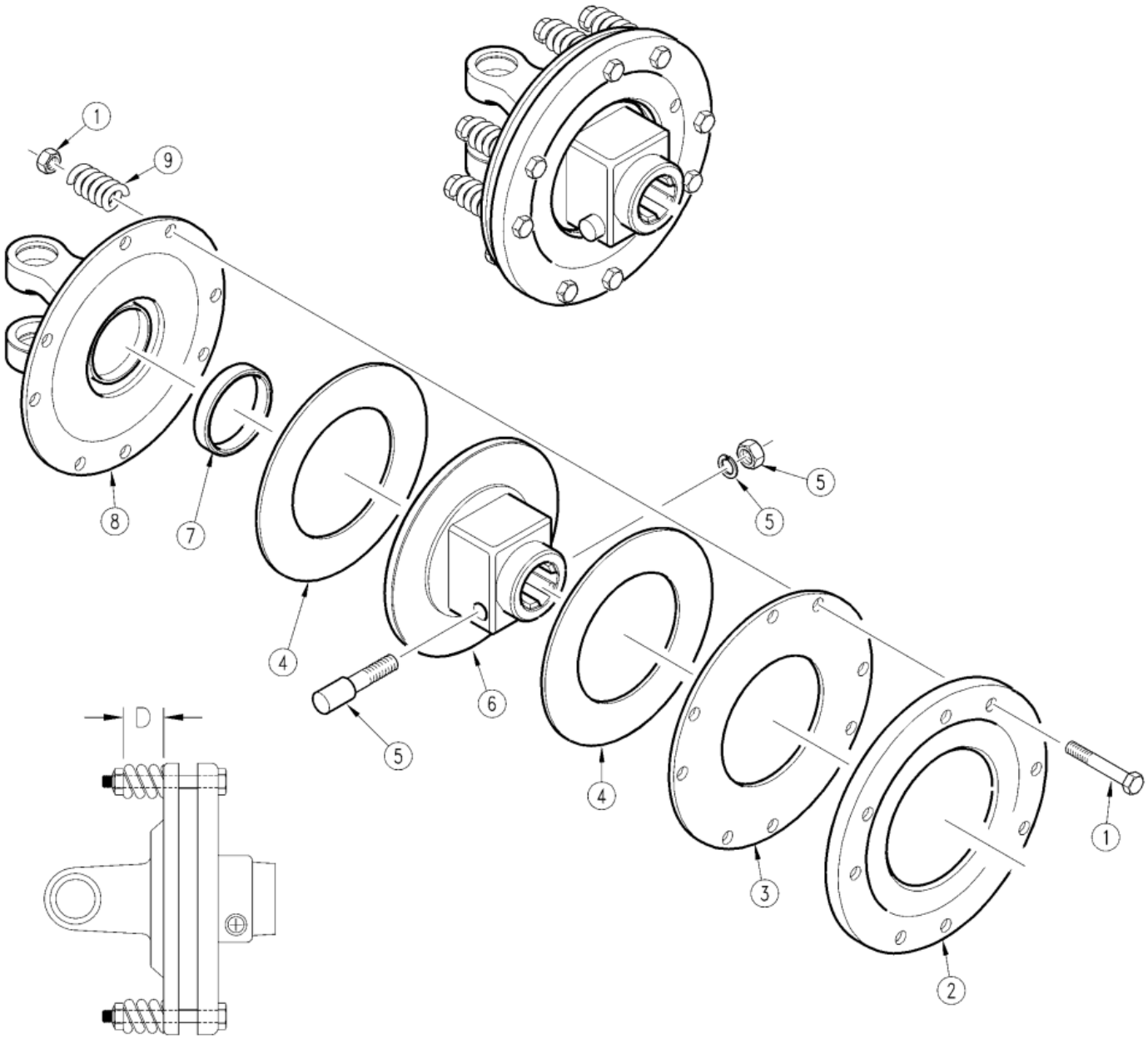

FACTORY CLUTCH SETTING			
PART NO.	DESCRIPTION	TORQUE SETTING	"D" DIM.
638237001	CENTER DECK – 1000 RPM	740 NM 545 FT/LBS	1 5/32"
638248001	CENTER DECK – 540 RPM	1220 NM 900 FT/LBS	1 1/16"
638248006	WING DECK	1040 NM 760 FT/LBS	1 1/8"

Driveline Slip Clutch (638237001, 638248001 & 638248006) Bondioli

Applies to Models: RCF45180, RCFM45180

Ref.	Part No.	Part Description	Comments
	DWG11534	Drawing Image Number	
	638237001	BP TORQUE LIMITER	Center Deck 1000 RPM
	638248001	BP TORQUE LIMITER	(Obsolete) Center Deck 540 RPM
	638248006	RPBY 826-116C *	Wing Deck
1	432000006	RPBY 432000006R05	
2	248230006R02	BP PRESSURE PLATE	
2	248230006	RPBY 248230006R02	Obsolete
3	248230002	BP INNER PLATE	
4	ZPM247000060	BP LINING (TORQUE LIMITER)	
4	247000060	RPBY ZPM247000060	(Obsolete) Rev. 2
4	247000061	RPBY 247000060	(Obsolete) Rev 1; Use up stock
5	408000060	RPBY 408000075	Rev. 2
5	408000029	RPBY 408000060	(Obsolete) Rev 1; Use up stock
6	515210311	BP FLANGE HUB (TORQUE LIMITER)	
7	258005320	BP BUSH (TORQUE LIMITER)	
8	253052101	BP FLANGE YOKE 5	
9	351022370	BP SPING (TORQUE LIMITER)	

Driveline Slip Clutch Wing (333919 & 053356)

Applies to Models: RCF45180, RCFM45180

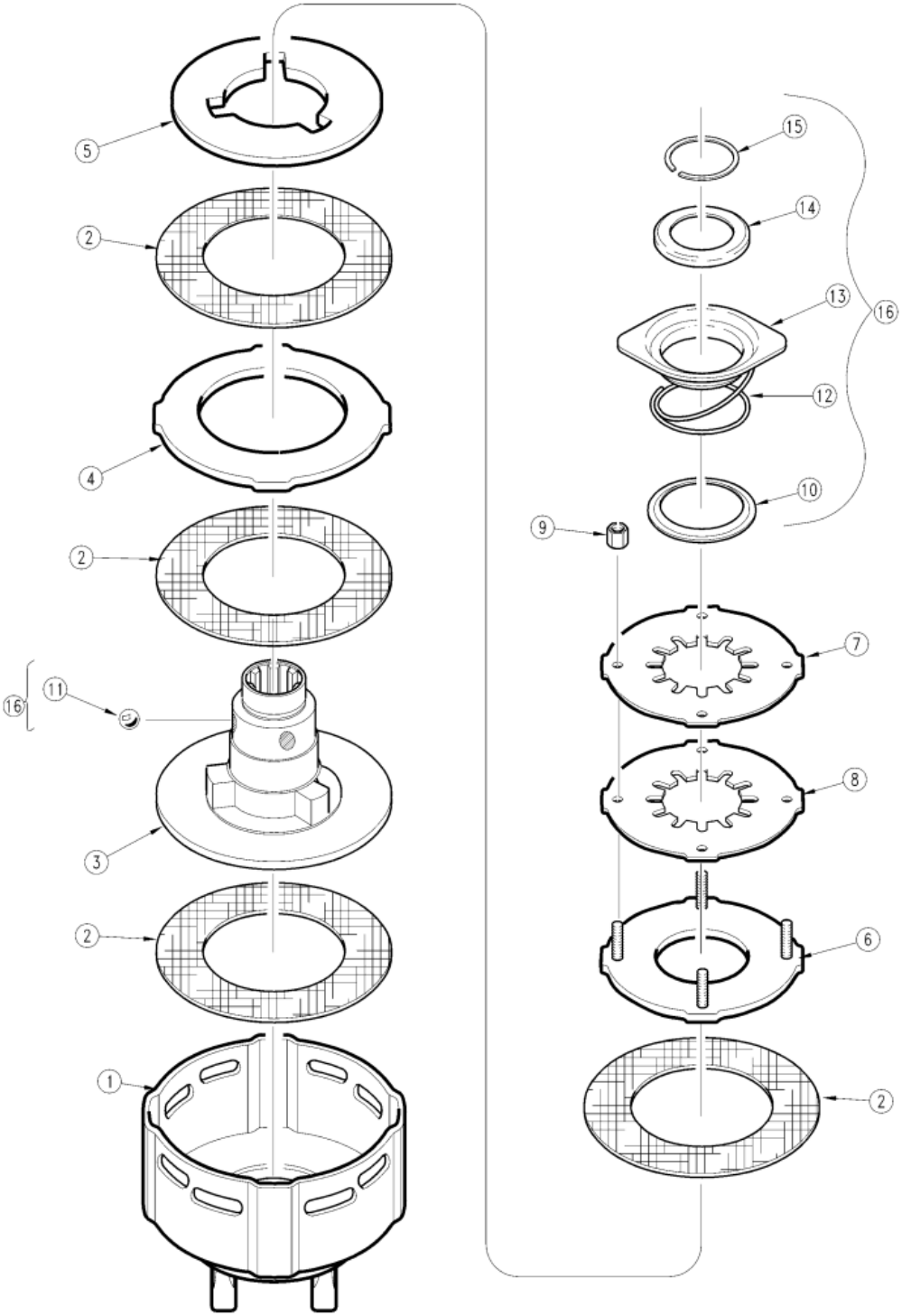

Driveline Slip Clutch Wing (333919 & 053356)

Applies to Models: RCF45180, RCFM45180

Ref.	Part No.	Part Description	Comments
	DWG23829	Drawing Image Number	
	333919	WS K92/4 CLUTCH 1200 NM 2400	
	053356	WS EK92/4 CLUTCH 1350 NM 2400	
1	042446	WS CLUTCH HOUSING	540 RPM Yoke not included, Clutch #053356
1	320527	WS CLUTCH HOUSING	1000 RPM Clutch #333919 w/yoke
2	168556	WS FRICTION DISK	
3	051554	WS HUB 1 3/8 - 6 SPL.	
4	042454	WS DRIVE PLATE	
5	042459	WS DRIVE PLATE	
6	381495	WS THRUST PLATE	
7	043489	WS BELLEVILLE SPRING	
8	043487	WS BELLEVILLE SPRING	540 RPM Clutch #053356
8	045560	WS BELLEVILLE SPRING	1000 RPM Clutch #333919
9	381957	WS HEX NUT M8	
10	047825	WS BACK UP RING	
11	020692	WS BALL	
12	045793	WS COMPRESSION SPRNG	
13	045790	WS LOCK COLLAR	
14	338531	WS FLANGED RING	
15	304149	WS SNAP RING	
16	341953	WS Q.D. FLG. KIT	

Driveline Wing (826-079C) (S/N 82427-)

Applies to Models: RCF45180, RCFM45180

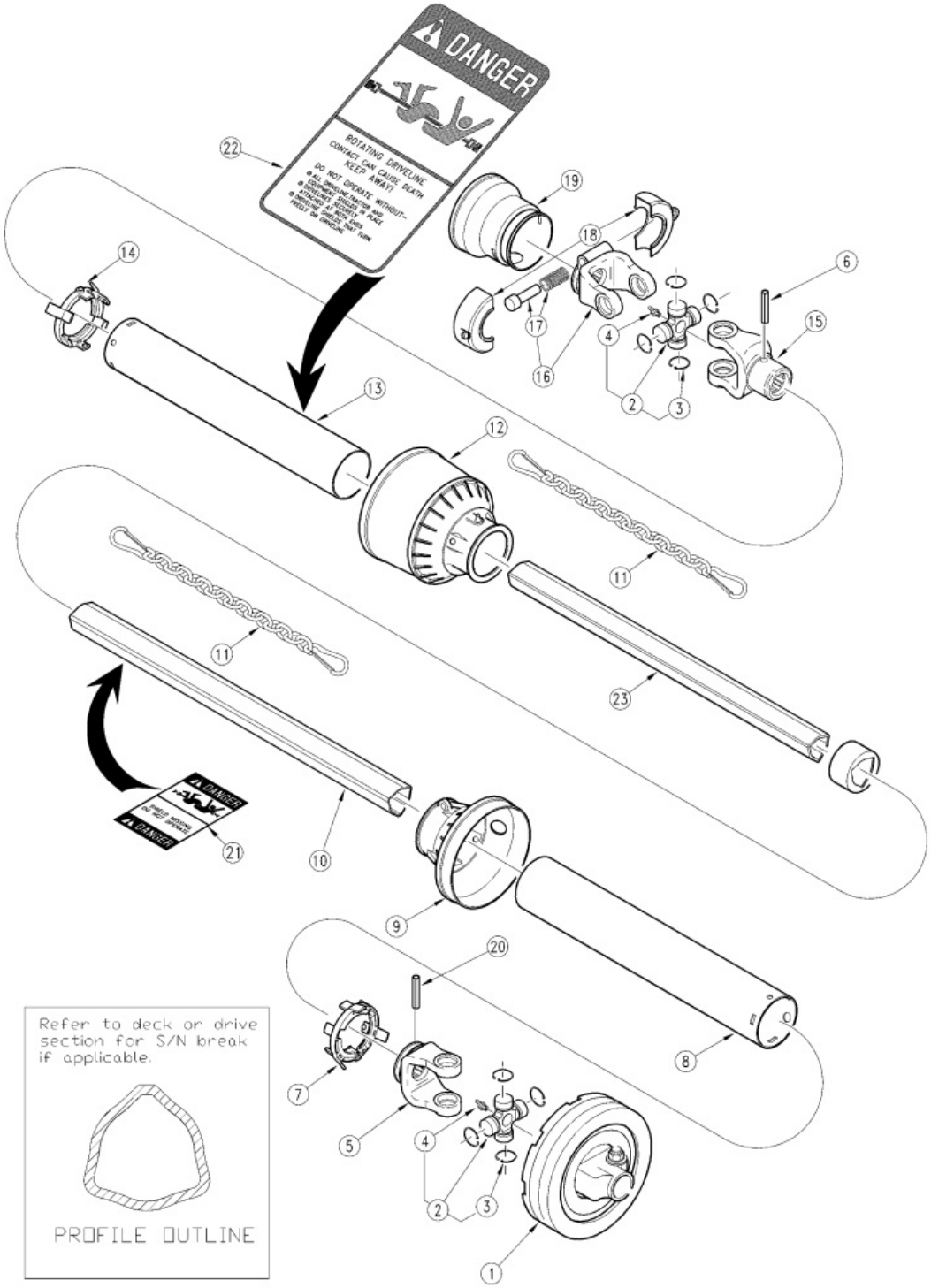

Driveline Wing (826-079C) (S/N 82427-)

Applies to Models: RCF45180, RCFM45180

Ref.	Part No.	Part Description	Comments
	DWG 11138	Drawing Image Number	
	826-079C	RPBY 826-096C *	Obsolete
1	663G48403R	BR TORQUE LIMITER	
1	676548303	RPBY 663G48403R	Obsolete
2	412050006	BP CROSS JOURNAL ASSY	
2	41205	BP CROSS JOURNAL ASSY	
3	338020000	BP SNAP RING	
4	348004000	RPBY 084099	
5	204056860	BP OUTER TUBE YOKE	
6	341002000	BP ROLL PIN	
7	255050005	BP OUTER BRG	
8	236631080	BP SAFETY TUBE	
9	517050008	BP CONE WITH COLLAR	
10	224701283	BP CARDAN TUBE	Rev. 2
10	224701143	RPBY 224701283	(Obsolete) Rev 1; Use up stock
11	252000001	BP SAFETY CHAIN	
12	517050091	INNER SAFTEY CONE	
13	237005357	RPBY 236821080	
14	255050006	BP INNER BRG	
15	204056861	BP INNER TUBE YOKE	
16	510050351	BP YOKE	
17	403000001	BP COMPLETE PUSH BUTTON	
18	255050009	BP RING NUT	
19	254050007	BP SAFETY CONE	
20	341043000	BP ROLL PIN	
21	399141000	RPBY 818-540C	
22	399143000	RPBY 818-152C	
23	270161290	BP INNER TB SIZE 6X1290 MM HT	Rev. 3
23	270111290	RPBY 270161290	(RPBY 270161290) Rev 2; Use up stock
23	244111150	RPBY 270111290	(RPBY 270111290) Rev 1; Use up stock

Driveline Wing (826-096C) (S/N 82428 to 115260)

Applies to Models: RCF45180, RCFM45180

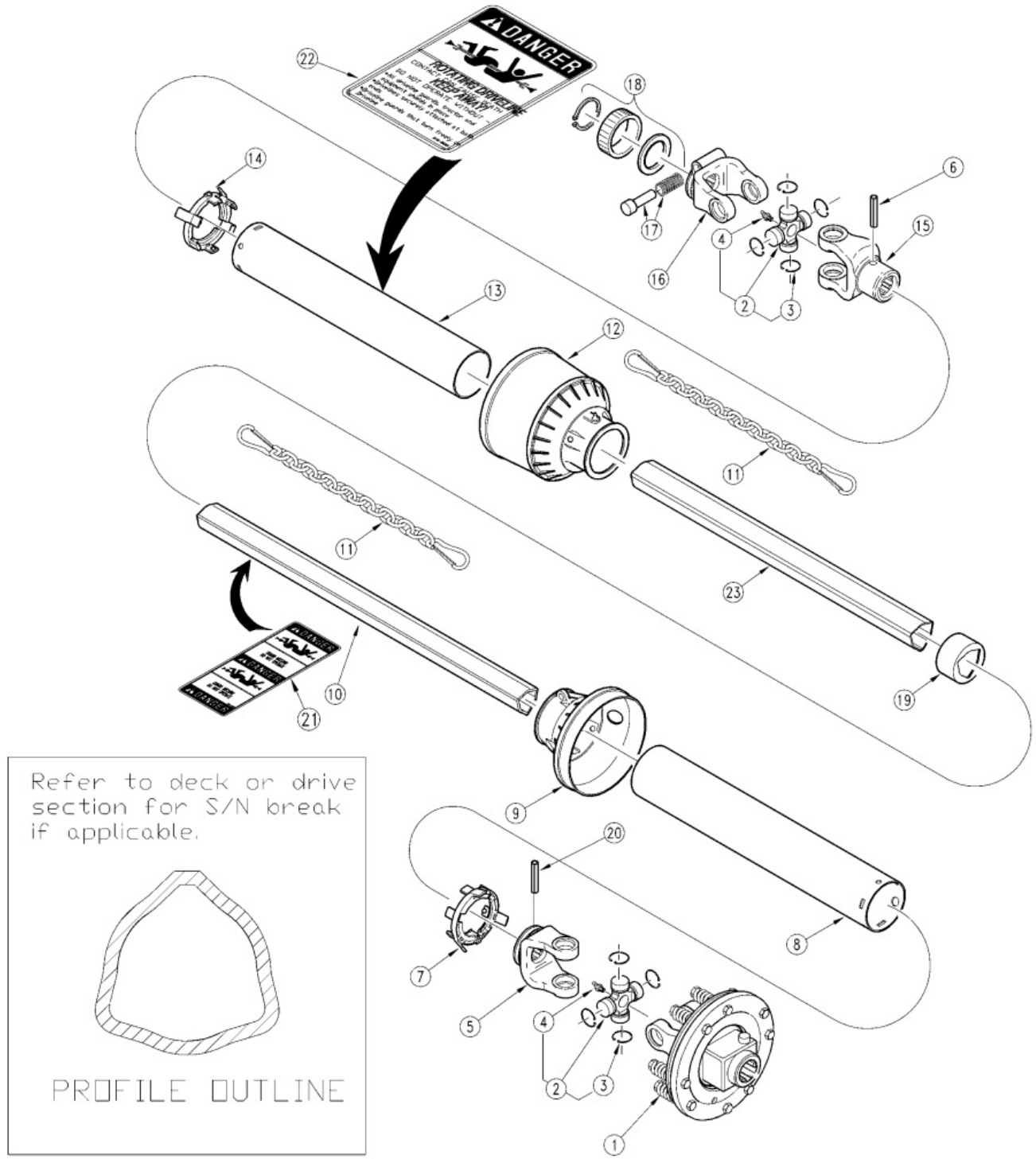

Driveline Wing (826-096C) (S/N 82428 to 115260)

Applies to Models: RCF45180, RCFM45180

Ref.	Part No.	Part Description	Comments
	DWG 11620	Drawing Image Number	
	826-096C	RPBY 826-116C *	Obsolete
1	638248006	RPBY 826-116C	
2	412040006	BP CROSS JOURNAL ASSY	
2	41205	BP CROSS JOURNAL ASSY	
3	338020000	BP SNAP RING	
4	348004000	RPBY 084099	
5	204056861	BP INNER TUBE YOKE	
6	341053000	BP ROLL PIN	
7	255050006	BP INNER BRG	
8	237005311	BP SAFETY TUBE	
9	517050099	BP CONE WITH COLLAR	
10	270161290	BP INNER TB SIZE 6X1290 MM HT	Rev. 3
10	270111290	RPBY 270161290	(RPBY 270161290) Rev 2; Use up stock
10	244111150	RPBY 270111290	(RPBY 270111290) Rev 1; Use up stock
11	252000001	BP SAFETY CHAIN	
12	517050098	BP CONE WITH COLLAR	
13	236631220	RPBY 236831220	
14	255050005	BP OUTER BRG	
15	204056860	BP OUTER TUBE YOKE	
16	572050351	BP YOKE	
17	403000001	BP COMPLETE PUSH BUTTON	
18	240003051	RPBY 240002461	
19	259006804	BP RING NUT	
20	341002000	BP ROLL PIN	
21	399143000	RPBY 818-152C	
22	399141000	RPBY 818-540C	
23	224701283	BP CARDAN TUBE	

Driveline Wing (826-116C) (S/N 115261+)

Applies to Models: RCF45180, RCFM45180

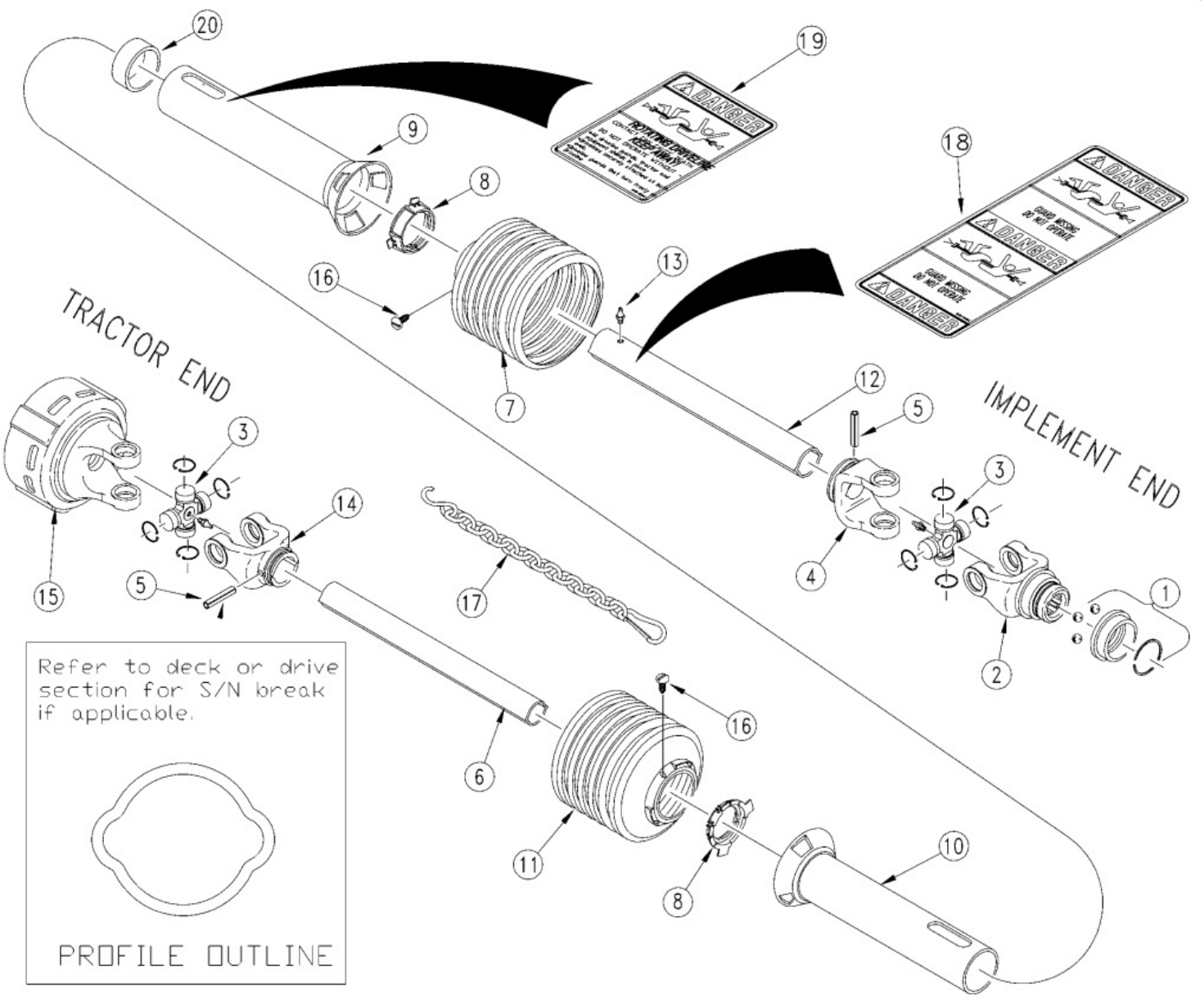

Driveline Wing (826-116C) (S/N 115261+)

Applies to Models: RCF45180, RCFM45180

Ref.	Part No.	Part Description	Comments
	DWG12381	Drawing Image Number	
	826-116C	DRVLN C4 50 1.38-6 QD CLTCH *	
1	390404	WS ASGE COLLAR KIT	
1	381908	RPBY 390404	Obsolete
2	133836	WS YOKE 1 3/8-6 ASGE	
2	380907	RPBY 133836	Obsolete
3	312410	WS CROSS BRG KIT	
4	019519	WS INBOARD YOKE	
5	020617	WS SPRING PIN 10 X 20	
6	315892	WS INNER PROFILE 1B 2400	
7	377336	WS SHIELD CONE 6 RIB	
8	087276	WS BRG RING - SC25	
9	383052	WS INNER SHIELD TUBE RND	
10	384348	WS OUTER SHIELD TUBE OVAL	
11	377436	WS SHIELD CONE - 6 RIB	
12	384202	WS PROFILE & SLEEVE W.A.1B/2AL	
13	380371	WS ZERK	
14	019518	WS INBOARD YOKE	
15	333919	WS K92/4 CLUTCH 1200 NM 2400	
16	365305	WS SCREW	
17	044321	DRIVELINE SHIELD SAFETY CHAIN	
18	818-540C	DECAL DANGER GUARD MISS PTO	
19	818-552C	DECAL DANGER PTO DRIVELINE	
20	355155	WS SUPPORT BRG	

Gearbox (826-035C) OMNI (Square Housing)

Applies to Models: RCF45180

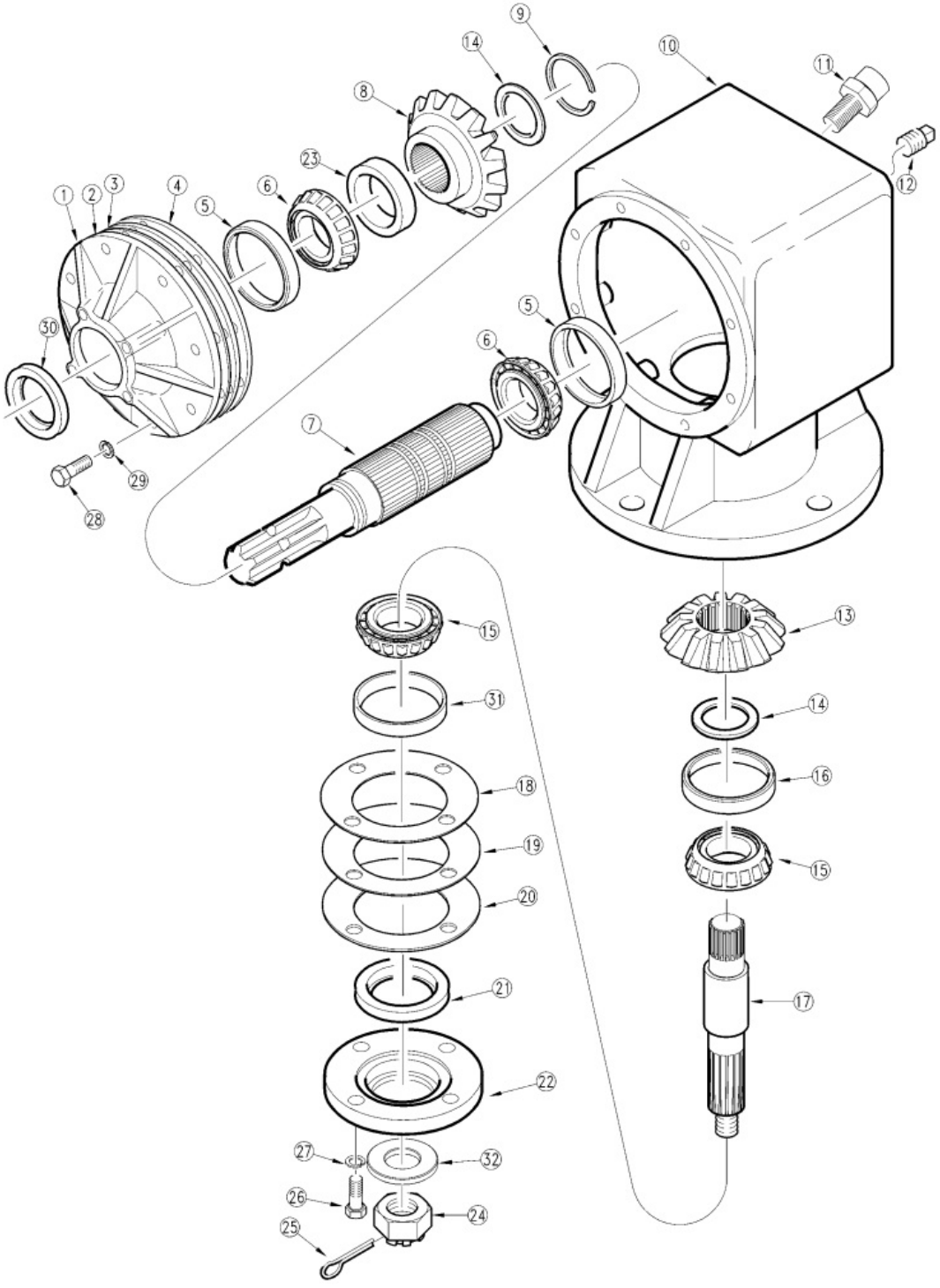

Gearbox (826-035C) OMNI (Square Housing)

Applies to Models: RCF45180

Ref.	Part No.	Part Description	Comments
	DWG 26951	Drawing Image Number	
	826-035C	RPBY 826-376C *	(Obsolete) Complete assembly
1	020162	OMNI INPUT CAP	
1	020006	OMNI INPUT CAP	Obsolete
2	070142	OMNI GASKET 0.10MM	
3	070141	OMNI GASKET 0.15MM	
4	070140	OMNI GASKET 0.30MM	
5	050013	OMNI BRG CUP - LM 603014	
6	050012	OMNI BRG CONE -LM603049	
7	040135	OMNI INPUT SHAFT 1 3/8-6A SPL	
8	030039	INPUT GEAR - 19 T., OMNI	
9	200003	OMNI RETAINING RING	
10	010160	OMNI HOUSING RC71SS	
10	010112	OMNI HOUSING	Obsolete
10	010059	OMNI HOUSING	Obsolete
11	826-497C	COMER VENT #8.6.7.00269	
11	8.6.7.00269	RPBY 826-497C	Obsolete
11	140033	RPBY 8.6.7.00269	Obsolete
12	140017	OMNI PLUG PIPE SQ HD1/8-27NPTF	
13	030038	OUTPUT PINION - 13 T., OMNI	
14	090073	OMNI SHIM .010	
15	050008	OMNI BRG CONE - 368	
16	050014	BRG CUP - 362A, OMNI	(S/N 107994+)
16	050015	BRG CUP - 362, OMNI	(S/N 107993-)
17	040112	OUTPUT SHAFT, OMNI	
18	070145	OMNI GASKET 0.10MM	
19	070144	OMNI GASKET 0.15MM	
20	070143	OMNI GASKET 0.30MM	
21	060004	OMNI OUTPUT SEAL	
22	020005	OMNI OUTPUT CAP	
23	090055	SPACER, OMNI 1:1.46 & 1:1.93	
24	803-095C	NUT HEX SLOTTED 1-14	
25	805-017C	PIN COTTER 3/16 X 1 3/4 PLT	
26	802-091C	HHCS 1/2-13X1 1/2 GR5	
27	804-015C	WASHER LOCK SPRING 1/2 PLT	
28	802-079C	HHCS 3/8-16X1 1/4 GR5	
29	804-013C	WASHER LOCK SPRING 3/8 PLT	
30	060005	INPUT SEAL, OMNI	
31	050015	BRG CUP - 362, OMNI	
32	804-070C	FLAT WASHER 1 SPECIAL	

Gearbox (826-038C) OMNI (Square Housing)

Applies to Models: RCFM45180

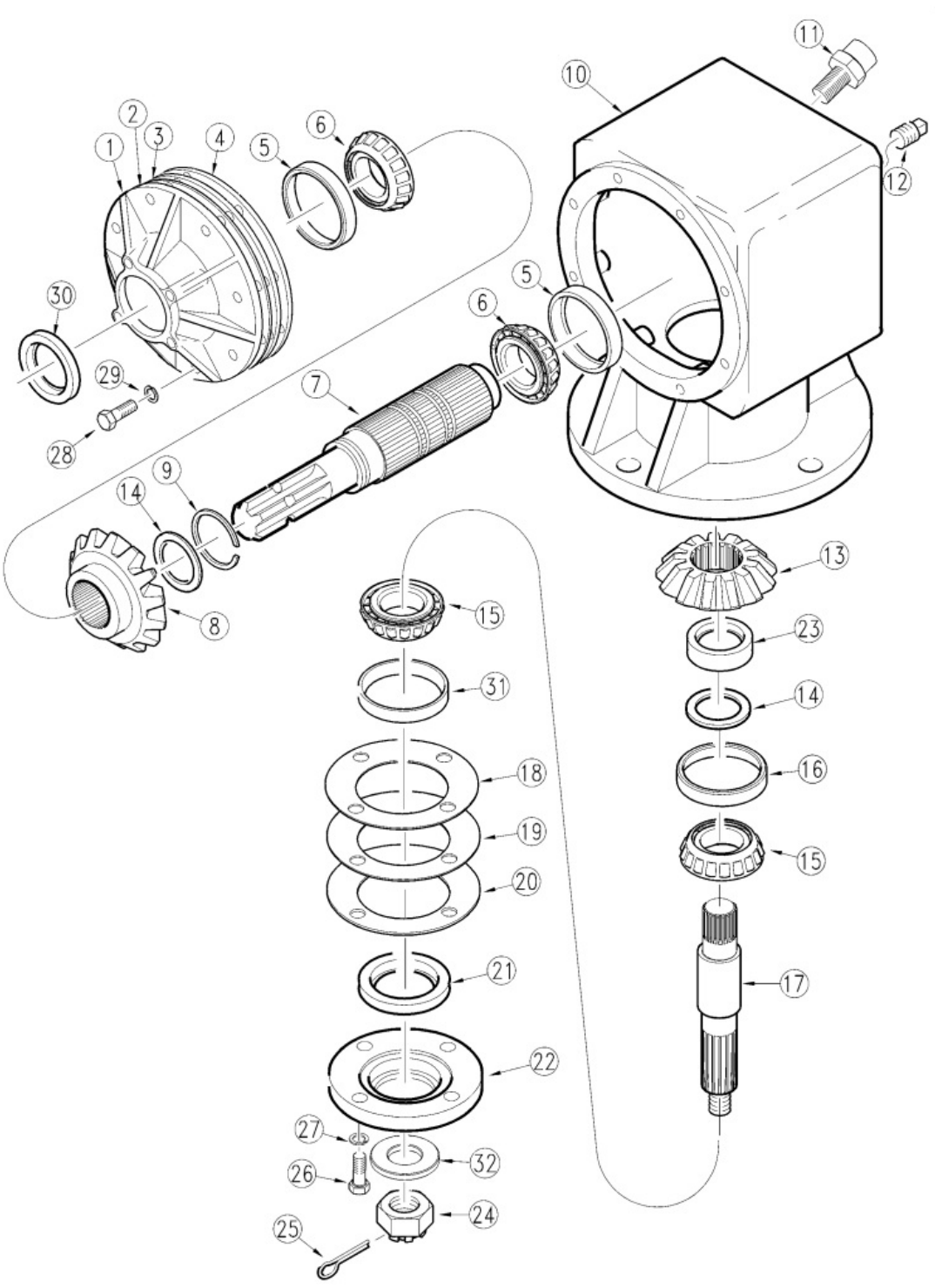

Gearbox (826-038C) OMNI (Square Housing)

Applies to Models: RCFM45180

Ref.	Part No.	Part Description	Comments
	DWG 15739	Drawing Image Number	
	826-038C	RPBY 826-377C *	(Obsolete) Complete assembly
1	020162	OMNI INPUT CAP	
2	070142	OMNI GASKET 0.10MM	
3	070141	OMNI GASKET 0.15MM	
4	070140	OMNI GASKET 0.30MM	
5	050013	OMNI BRG CUP - LM 603014	
6	050012	OMNI BRG CONE -LM603049	
7	040135	OMNI INPUT SHAFT 1 3/8-6A SPL	
8	030040	INPUT GEAR - 17 T., OMNI	
9	200003	OMNI RETAINING RING	
10	010160	OMNI HOUSING RC71SS	
11	826-497C	COMER VENT #8.6.7.00269	
11	8.6.7.00269	RPBY 826-497C	Obsolete
11	140033	RPBY 8.6.7.00269	Obsolete
12	140017	OMNI PLUG PIPE SQ HD1/8-27NPTF	
13	030041	OUTPUT PINION - 14 T., OMNI	
14	090073	OMNI SHIM .010	
15	050008	OMNI BRG CONE - 368	
16	050014	BRG CUP - 362A, OMNI	S/N 107994+
16	050015	BRG CUP - 362, OMNI	S/N 107993-
17	040112	OUTPUT SHAFT, OMNI	
18	070145	OMNI GASKET 0.10MM	
19	070144	OMNI GASKET 0.15MM	
20	070143	OMNI GASKET 0.30MM	
21	060004	OMNI OUTPUT SEAL	
22	020005	OMNI OUTPUT CAP	
23	090015	SPACER, OMNI	
24	803-095C	NUT HEX SLOTTED 1-14	
25	805-017C	PIN COTTER 3/16 X 1 3/4 PLT	
26	802-091C	HHCS 1/2-13X1 1/2 GR5	
27	804-015C	WASHER LOCK SPRING 1/2 PLT	
28	802-079C	HHCS 3/8-16X1 1/4 GR5	
29	804-013C	WASHER LOCK SPRING 3/8 PLT	
30	060005	INPUT SEAL, OMNI	
31	050015	BRG CUP - 362, OMNI	
32	804-070C	FLAT WASHER 1 SPECIAL	

Gearbox (826-060C) OMNI

Applies to Models: RCFM45180

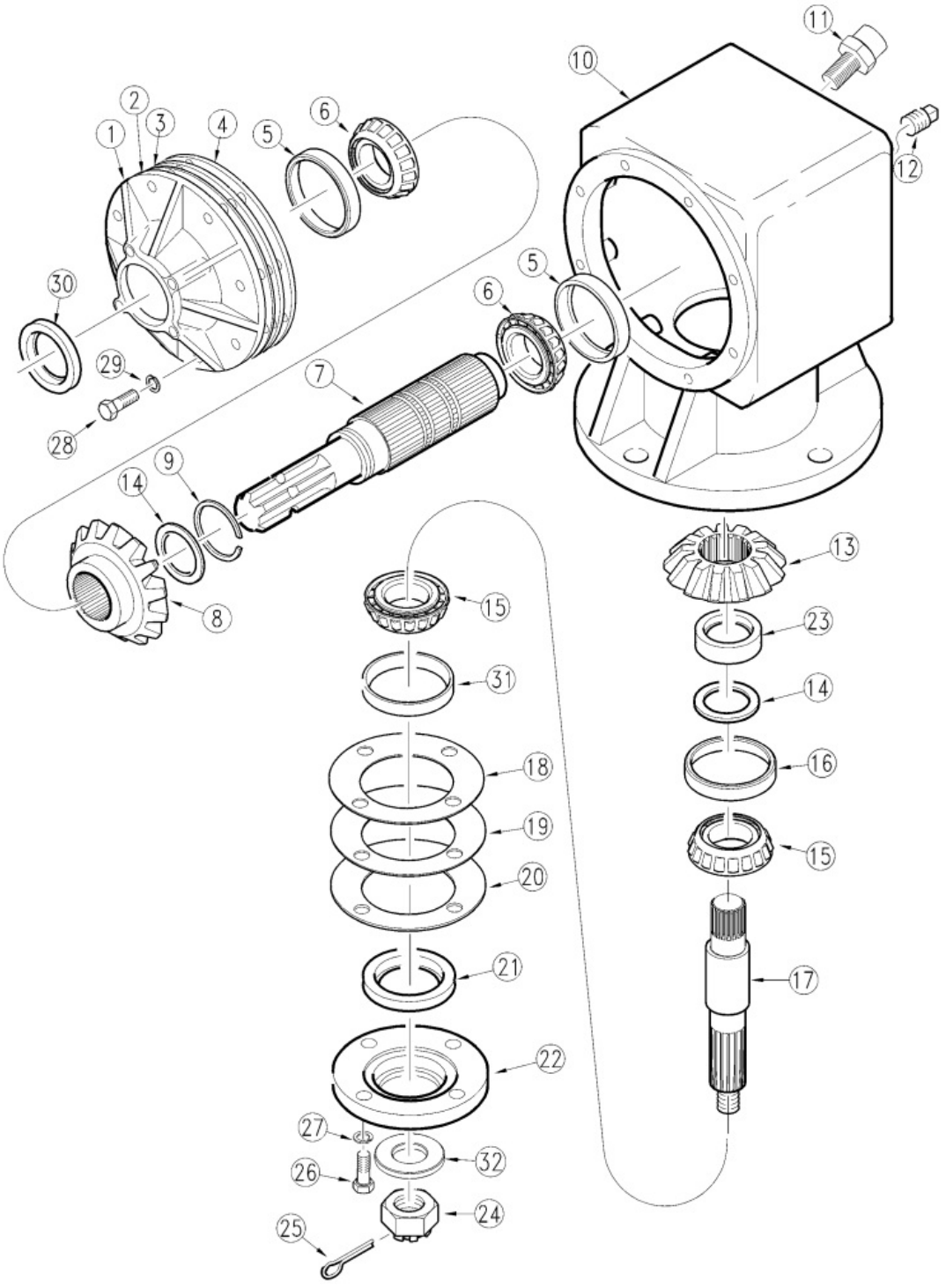

Gearbox (826-060C) OMNI

Applies to Models: RCFM45180

Ref.	Part No.	Part Description	Comments
	DWG 15739	Drawing Image Number	
	826-060C	GEARBOX RC71SS 1.21:1 REDUC *	Complete assembly
1	020162	OMNI INPUT CAP	(S/N 107994+) Rev. 2 not compat. w/Rev. 1
1	020006	OMNI INPUT CAP	(S/N 107993-) Rev. 1
2	070142	OMNI GASKET 0.10MM	
3	070141	OMNI GASKET 0.15MM	
4	070140	OMNI GASKET 0.30MM	
5	050013	OMNI BRG CUP - LM 603014	
6	050012	OMNI BRG CONE -LM603049	
7	040135	OMNI INPUT SHAFT 1 3/8-6A SPL	
8	030041	OUTPUT PINION - 14 T., OMNI	
9	200003	OMNI RETAINING RING	
10	010160	OMNI HOUSING RC71SS	(S/N 160730+) Rev. 3 not compat. w/Rev. 2
10	010112	OMNI HOUSING	(S/N 107994 <-> 160729) Rev. 2 not compat. w/Rev. 2
10	010059	OMNI HOUSING	(S/N 107993-) Rev. 1
11	826-497C	COMER VENT #8.6.7.00269	
11	8.6.7.00269	RPBY 826-497C	Obsolete
11	140033	RPBY 8.6.7.00269	Obsolete
12	140017	OMNI PLUG PIPE SQ HD1/8-27NPTF	
13	030040	INPUT GEAR - 17 T., OMNI	
14	090073	OMNI SHIM .010	
15	050008	OMNI BRG CONE - 368	
16	050014	BRG CUP - 362A, OMNI	(S/N 107994+) Rev. 2 not compat. w/Rev. 1
16	050015	BRG CUP - 362, OMNI	(S/N 107993-) Rev. 1
17	040112	OUTPUT SHAFT, OMNI	
18	070145	OMNI GASKET 0.10MM	
19	070144	OMNI GASKET 0.15MM	
20	070143	OMNI GASKET 0.30MM	
21	060004	OMNI OUTPUT SEAL	
22	020005	OMNI OUTPUT CAP	
23	090015	SPACER, OMNI	
24	803-079C	NUT HEX SLOTTED 1 1/4 - 7	
25	805-017C	PIN COTTER 3/16 X 1 3/4 PLT	
26	802-091C	HHCS 1/2-13X1 1/2 GR5	
27	804-015C	WASHER LOCK SPRING 1/2 PLT	
28	802-079C	HHCS 3/8-16X1 1/4 GR5	
29	804-013C	WASHER LOCK SPRING 3/8 PLT	
30	060005	INPUT SEAL, OMNI	
31	050015	BRG CUP - 362, OMNI	
32	804-070C	FLAT WASHER 1 SPECIAL	

Gearbox (826-376C) Comer

Applies to Models: RCF45180

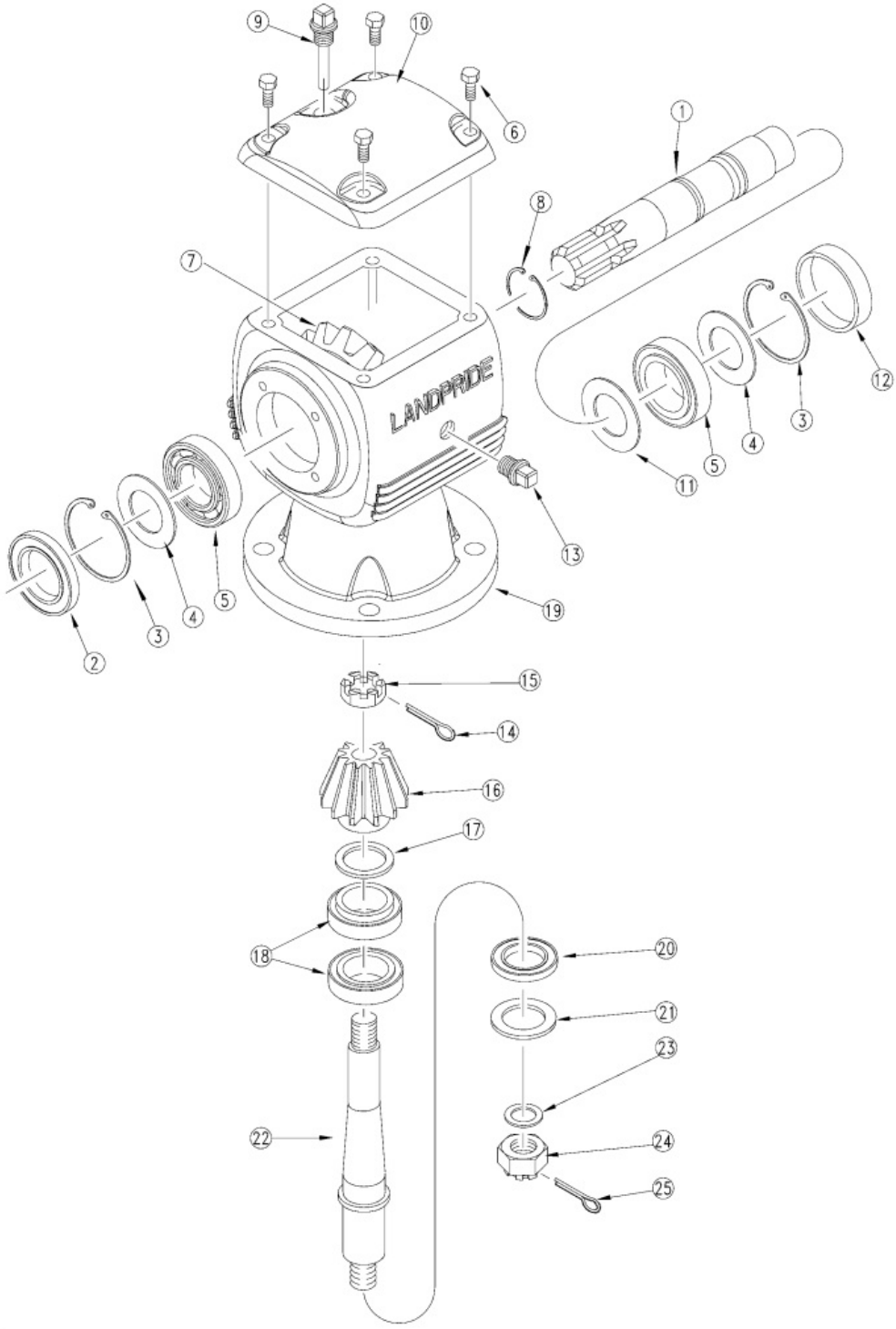

Gearbox (826-376C) Comer

Applies to Models: RCF45180

Ref.	Part No.	Part Description	Comments
	DWG 21186	Drawing Image Number	
	826-376C	GBOX RC25 1.38-6 1:1.44 STD. *	Complete assembly
1	0.210.2000.00	CO INPUT SHAFT 1.38-6	
2	8.7.1.02348	CO DUST LIP (45X85X10)	
2	8.7.3.00331	RPBY 8.7.1.02348	Obsolete
3	8.5.2.00332	CO SNAP RING UNI 7437	
4	A.709.500	COMER SHIM KIT	
4	0.709.7500.00	RPBY A.709.500	Obsolete
5	8.0.9.00143	CO BRG 30209 TAPERED	
6	8.1.1.00501	CO BOLT M10X22 HHB	
7	2.210.5002.00	CO BEVEL GEAR SET M6	
7	0.210.6001.00	RPBY 2.210.5002.00	Obsolete
8	8.5.1.00533	CO SNAP RING 50 UNI7435	
9	826-490C	COMER U0.210.7100.00 DIPSTICK	
9	0.210.7100.00	RPBY 826-490C	Obsolete
10	0.210.1300.00	CO COVER	
11	0.252.7525.00	CO SHIM 45.3X2.5	
12	0.121.7101.00	CO CAP	
13	8.6.6.00201	CO PLUG 3/8 (SOLID PLUG)	
14	8.4.7.02265	CO COTTER PIN B 5X60	
15	0.132.7106.00	CO NUT M30 X 1.5	
16	2.210.5002.00	CO BEVEL GEAR SET M6	
16	0.210.5001.00	RPBY 2.210.5002.00	Obsolete
17	A.712.500	COMER SHIM KIT	
17	0.712.7500.00	RPBY A.712.500	Obsolete
18	822-214C	BRG CUP/CONE SET 30210	Includes bearing and race
18	04-011	RPBY 822-214C	(Obsolete) Includes bearing and race
19	0.210.0300.00	CO CASTING & MACHINE	
20	8.7.1.01107	CO SEAL (50X90X10)	
21	0.139.7100.00	CO SEAL RETAINER	
22	0.210.3001.00	CO OUTPUT SHAFT	
23	0.139.7101.00	CO BLANK WASHER	
24	8.2.2.00555	CO NUT, CASTLE M30 X 2	
25	8.4.7.00146	COTTER PIN B6 X 60 *	
		Notes: Oil Type 80-90W Capacity 6.5 Pints	

Gearbox Center & Left Deck 540 RPM (826-069C) ITG

Applies to Models: RCF45180

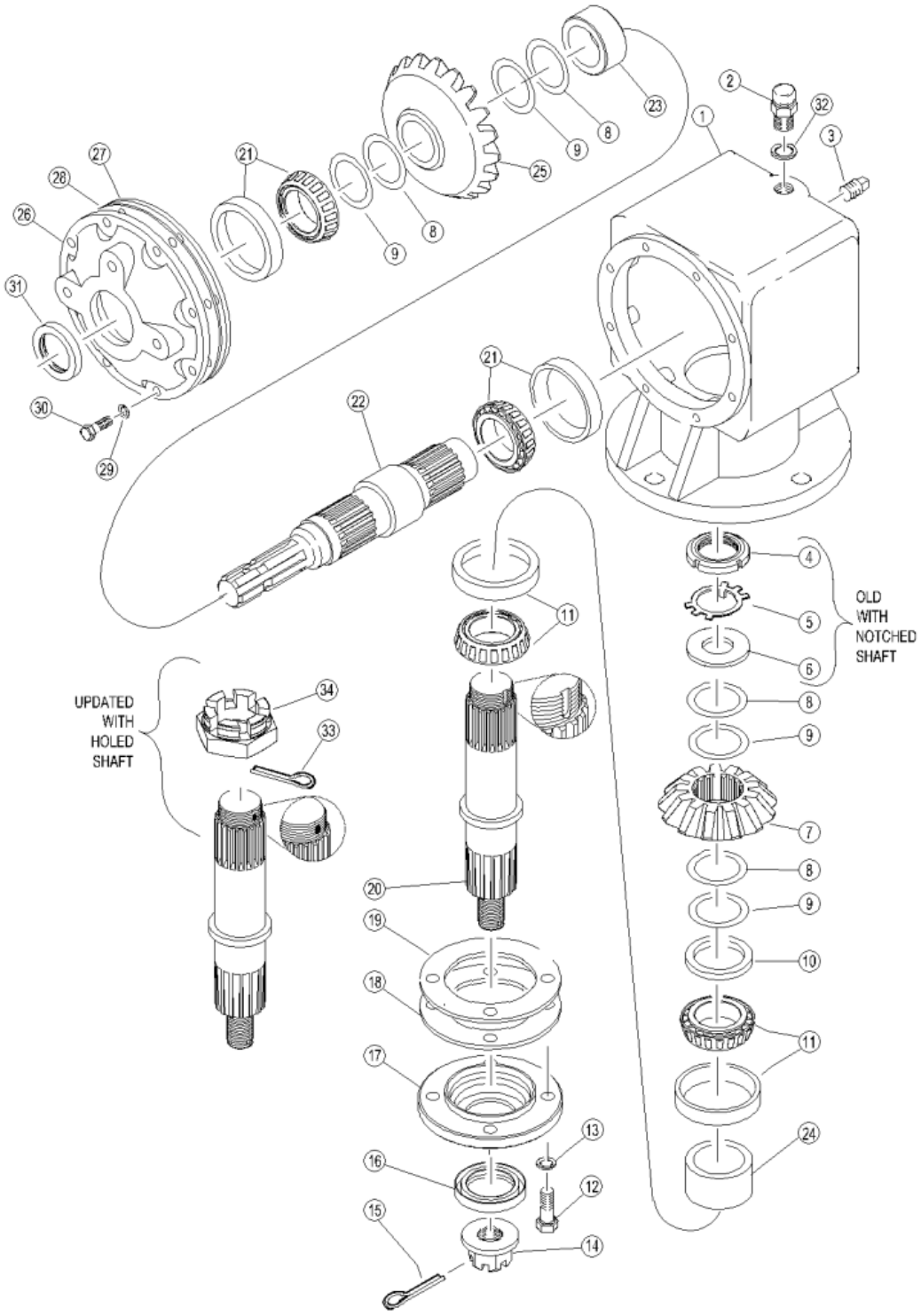

Gearbox Center & Left Deck 540 RPM (826-069C) ITG

Applies to Models: RCF45180

Ref.	Part No.	Part Description	Comments
	DWG 10247	Drawing Image Number	
	826-069C	RPBY 826-035C *	Obsolete
1	18-001	ITG HOUSING	
2	09-011	ITG M18 X 1.5P PLUG VENTED	
2	8.6.7.00269	RPBY 826-497C	
2	140033	RPBY 8.6.7.00269	Obsolete
2	09-008	RPBY 140033	Obsolete
3	09-012	ITG M18 X 1.5P PLUG (NON-VENT)	
3	09-005	RPBY 140017	
4	11-003	ITG BRG ADJUSTING NUT	
4	11-012	ITG BRG ADJ. NUT	
5	07-004	ITG BRG NUT LOCKWASHER	Not used with 11-012
6	07-006	ITG FLAT WASHER	Not used with 11-012
7	03-008	ITG 13 TOOTH OUTPUT GEAR	Obsolete
8	17-003	ITG GEAR ADJUSTING SHIM 0.50	
9	17-002	ITG GEAR ADJUSTING SHIM 0.30	
10	10-016	ITG GEAR MOUNTING SPACER	
11	822-214C	BRG CUP/CONE SET 30210	Includes bearing and race
11	04-011	RPBY 822-214C	(Obsolete) Includes bearing and race
12	06-002	ITG M12 X 1.75 X 38 CAP SCREW	
13	07-002	RPBY 804-159C	
14	11-008	ITG 1-14 FLANGED HEX NUT	
15	805-017C	PIN COTTER 3/16 X 1 3/4 PLT	
16	05-008	ITG OUTPUT SHAFT OIL SEAL	
17	20-002	ITG OUTPUT CAP	
18	08-002	ITG OUTPUT CAP GASKET 0.25MM	
19	08-001	ITG OUTPUT CAP GASKET 0.10MM	
20	02-004	ITG STD 75 OUTPUT SHAFT	
21	04-017	RPBY 8.0.9.00143	
22	02-002	ITG INPUT SHAFT	
23	10-001	ITG SPACER	
24	10-003	ITG OUTPUT BRG SPACER	
25	03-009	ITG INPUT GEAR 19 TOOTH	
26	20-001	ITG INPUT CAP	
27	08-007	ITG INPUT CAP GASKET 0.25MM	
28	08-006	ITG INPUT CAP GASKET 0.10MM	
29	804-158C	WASHER SPRING LOCK M10 PLT	
29	07-001	RPBY 804-158C	Obsolete
30	06-003	ITG M10 X 1.5 X 30 CAP SCREW	
31	05-007	ITG INPUT SHAFT OIL SEAL	
32	07-022	ITG SEALING WASHER	
33	12-008	ITG COTTER PIN	
34	11-012	ITG BRG ADJ. NUT	

Gearbox Center Deck 1000 RPM (826-074C) ITG

Applies to Models: RCFM45180

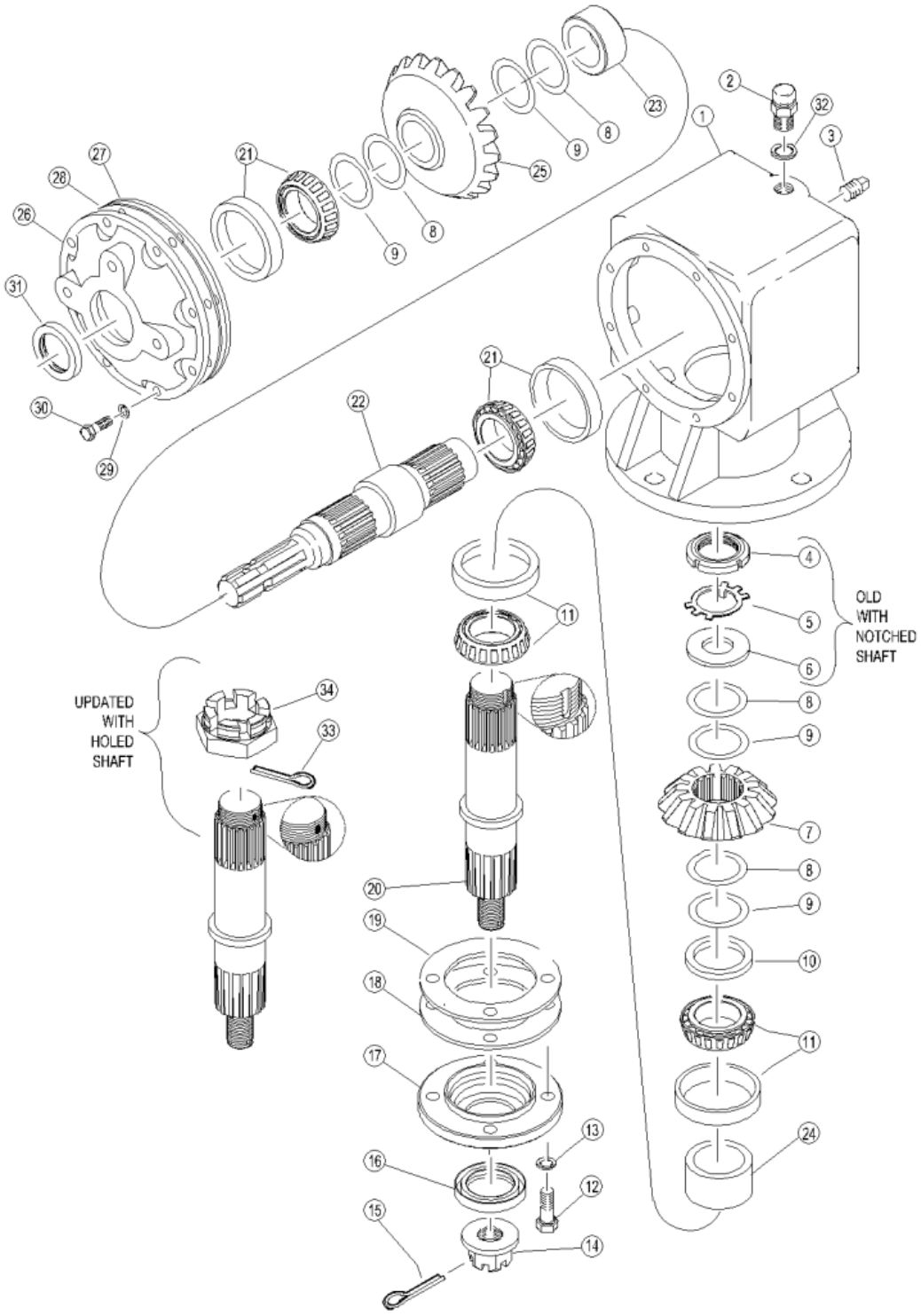

Gearbox Center Deck 1000 RPM (826-074C) ITG

Applies to Models: RCFM45180

Ref.	Part No.	Part Description	Comments
	DWG26945	Drawing Image Number	
	826-074C	RPBY 826-060C *	Obsolete
1	18-001	ITG HOUSING	
2	09-011	ITG M18 X 1.5P PLUG VENTED	
2	8.6.7.00269	RPBY 826-497C	
2	140033	RPBY 8.6.7.00269	Obsolete
2	09-008	RPBY 140033	Obsolete
3	09-012	ITG M18 X 1.5P PLUG (NON-VENT)	
3	09-005	RPBY 140017	
4	11-003	ITG BRG ADJUSTING NUT	
4	11-012	ITG BRG ADJ. NUT	
5	07-004	ITG BRG NUT LOCKWASHER	Not used with 11-012
6	07-006	ITG FLAT WASHER	Not used with 11-012
7	03-007	ITG 17 TOOTH OUTPUT GEAR	
8	17-003	ITG GEAR ADJUSTING SHIM 0.50	
9	17-002	ITG GEAR ADJUSTING SHIM 0.30	
10	10-016	ITG GEAR MOUNTING SPACER	
11	822-214C	BRG CUP/CONE SET 30210	Includes bearing and race
11	04-011	RPBY 822-214C	(Obsolete) Includes bearing and race
12	06-002	ITG M12 X 1.75 X 38 CAP SCREW	
13	07-002	RPBY 804-159C	
14	11-008	ITG 1-14 FLANGED HEX NUT	
15	805-017C	PIN COTTER 3/16 X 1 3/4 PLT	
16	05-008	ITG OUTPUT SHAFT OIL SEAL	
17	20-002	ITG OUTPUT CAP	
18	08-002	ITG OUTPUT CAP GASKET 0.25MM	
19	08-001	ITG OUTPUT CAP GASKET 0.10MM	
20	02-004	ITG STD 75 OUTPUT SHAFT	
21	04-017	RPBY 8.0.9.00143	
22	02-002	ITG INPUT SHAFT	
23	11001	NUT MALE BRAKE LINE M10X1.25	
24	10-003	ITG OUTPUT BRG SPACER	
25	03-006	ITG INPUT GEAR 14 TOOTH	
26	20-001	ITG INPUT CAP	
27	08-007	ITG INPUT CAP GASKET 0.25MM	
28	08-006	ITG INPUT CAP GASKET 0.10MM	
29	804-158C	WASHER SPRING LOCK M10 PLT	
29	07-001	RPBY 804-158C	Obsolete
30	06-003	ITG M10 X 1.5 X 30 CAP SCREW	
31	05-007	ITG INPUT SHAFT OIL SEAL	
32	07-022	ITG SEALING WASHER	
33	12-008	ITG COTTER PIN	
34	11-012	ITG BRG ADJ. NUT	

Gearbox Divider 1000 RPM (826-072C) ITG (S/N 113823-)

Applies to Models: RCFM45180

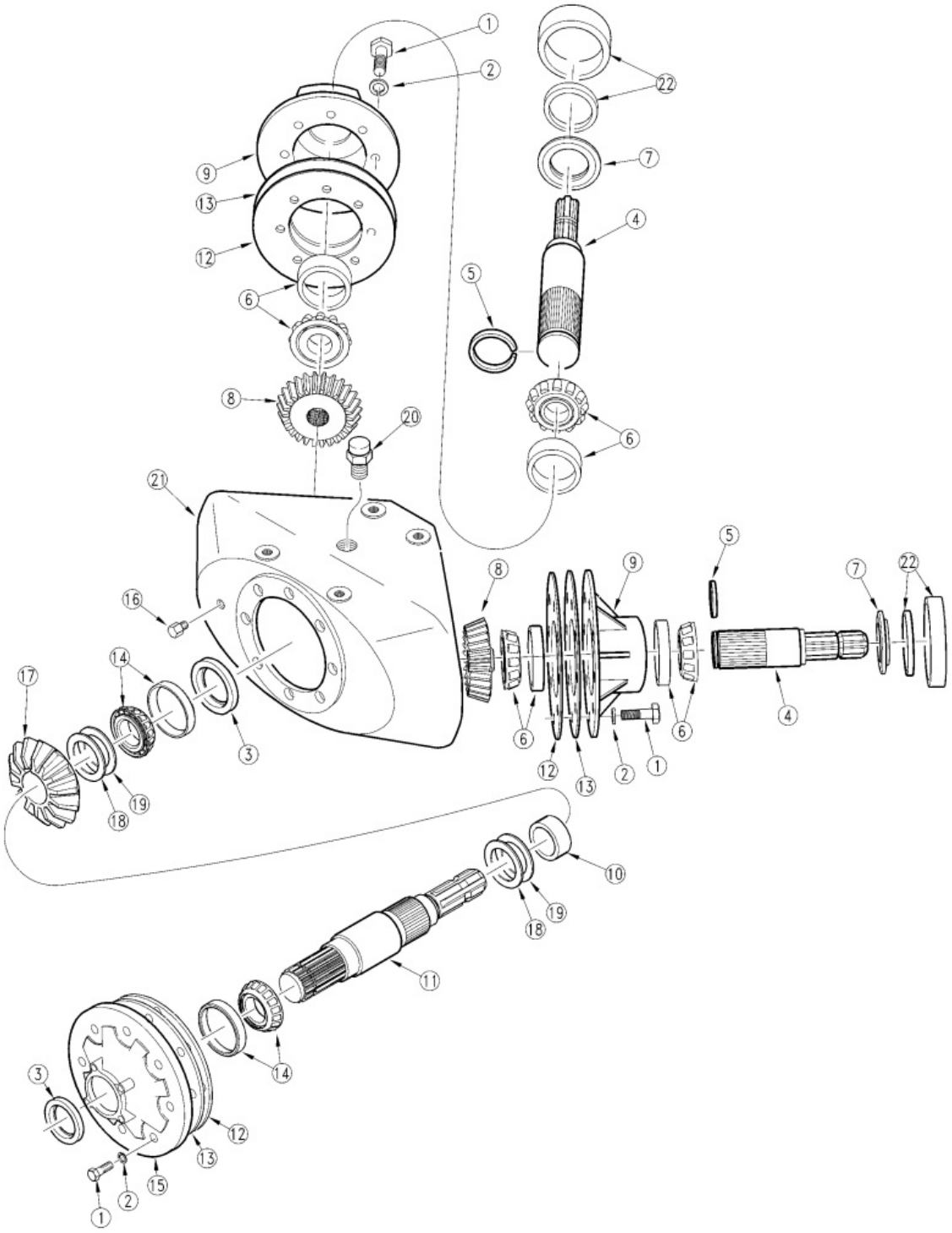

Gearbox Divider 1000 RPM (826-072C) ITG (S/N 113823-)

Applies to Models: RCFM45180

Ref.	Part No.	Part Description	Comments
	DWG26949	Drawing Image Number	
	826-072C	RPBY 826-253C *	Obsolete
1	06-003	ITG M10 X 1.5 X 30 CAP SCREW	
2	804-158C	WASHER SPRING LOCK M10 PLT	
2	07-001	RPBY 804-158C	Obsolete
3	05-007	ITG INPUT SHAFT OIL SEAL	
4	02-014	ITG HORIZONTAL OUTPUT SHAFT	
5	21-001	ITG RETAINING RING	
6	822-214C	BRG CUP/CONE SET 30210	Includes bearing and race
6	04-011	RPBY 822-214C	(Obsolete) Includes bearing and race
7	11001	NUT MALE BRAKE LINE M10X1.25	
8	03-021	ITG GEAR 26 TOOTH	
9	20-009	ITG HORIZONTAL HUB CAP	
10	10-015	ITG INPUT SHAFT SPACER	
11	02-032	ITG INPUT SHAFT	Rev. 2
11	02-013	RPBY 02-032	(Obsolete) Rev 1; Use up stock
12	08-006	ITG INPUT CAP GASKET 0.10MM	Varies
13	08-007	ITG INPUT CAP GASKET 0.25MM	Varies
14	04-017	RPBY 8.0.9.00143	
15	20-001	ITG INPUT CAP	
16	09-005	RPBY 140017	
17	03-020	ITG GEAR 20 TOOTH	
18	17-002	ITG GEAR ADJUSTING SHIM 0.30	Varies
19	17-003	ITG GEAR ADJUSTING SHIM 0.50	Varies
20	826-497C	COMER VENT #8.6.7.00269	
21		ITG HOUSING	
22	05-020	SEAL ADAPTOR	

Gearbox Divider 1000 RPM (826-072C) ITG (S/N 113824+)

Applies to Models: RCFM45180

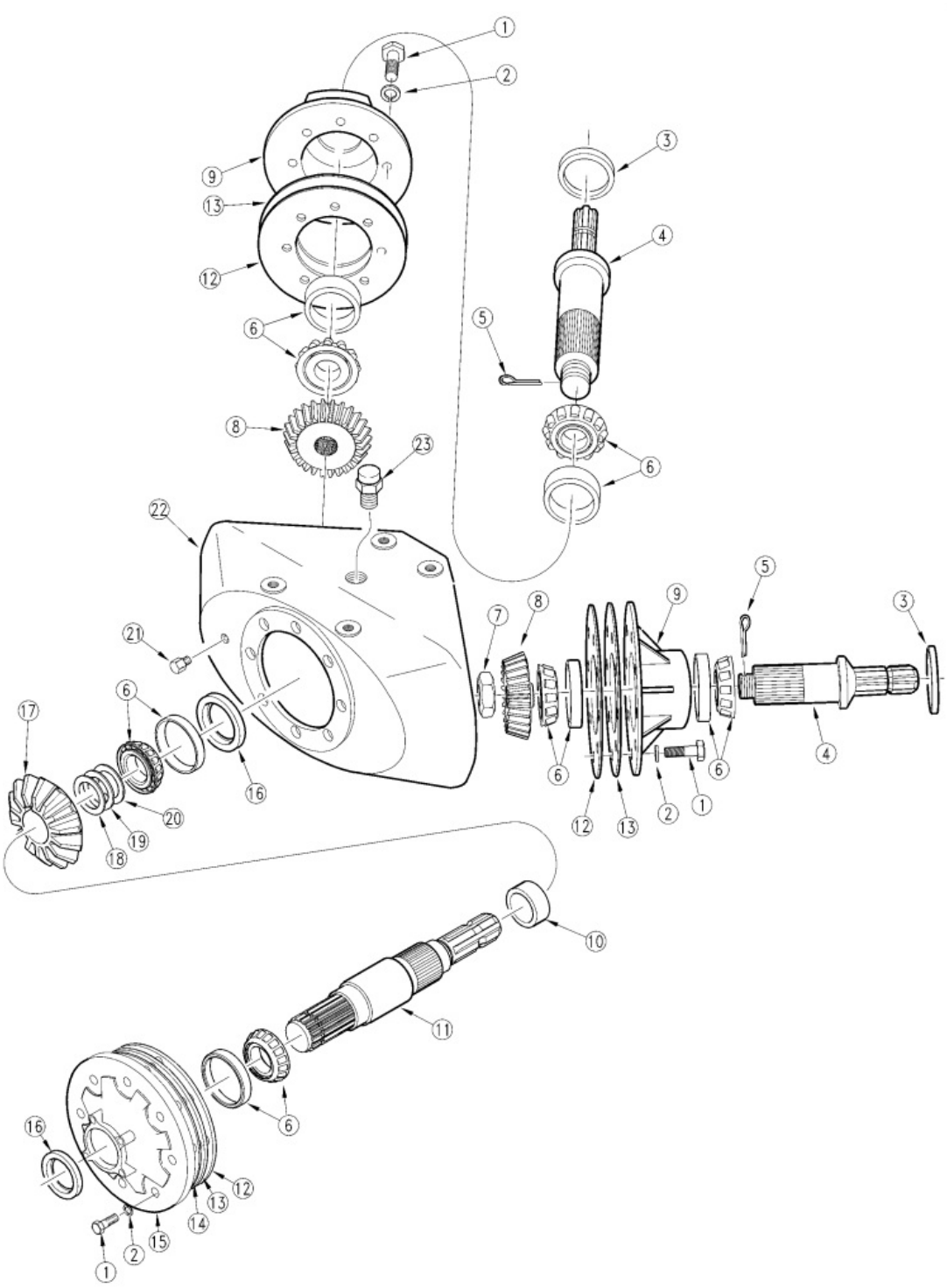

Gearbox Divider 1000 RPM (826-072C) ITG (S/N 113824+)

Applies to Models: RCFM45180

Ref.	Part No.	Part Description	Comments
	DWG 26946	Drawing Image Number	
	826-072C	RPBY 826-253C *	Obsolete
1	06-003	ITG M10 X 1.5 X 30 CAP SCREW	
2	804-158C	WASHER SPRING LOCK M10 PLT	
2	07-001	RPBY 804-158C	Obsolete
3	05-012B	ITG OUTPUT SEAL 58X95X10 THK	Measurement is required before ordering
3	05-012A	RPBY 0.267.7104.00	Measurement is required before ordering
4	02-017	ITG HORIZONTAL OUTPUT SHAFT	
5	12-008	ITG COTTER PIN	
6	822-214C	BRG CUP/CONE SET 30210	Includes bearing and race
6	04-011	RPBY 822-214C	(Obsolete) Includes bearing and race
7	11-012	ITG BRG ADJ. NUT	
8	03-039	ITG 26 TOOTH GEAR	
9	20-018	ITG HORIZONTAL HUB CAP	Obsolete
10	10-001	ITG SPACER	
11	02-005	ITG INPUT SHAFT SPLITTER BOX	
12	08-006	ITG INPUT CAP GASKET 0.10MM	Varies
13	08-007	ITG INPUT CAP GASKET 0.25MM	Varies
14	08-008	ITG IN & OUT CAP GASKET 0.45MM	Varies
15	20-019	ITG INPUT CAP SPLITTER BOX	
16	05-007	ITG INPUT SHAFT OIL SEAL	
17	03-038	ITG 20 TOOTH GEAR	
18	17-002	ITG GEAR ADJUSTING SHIM 0.30	Varies
19	17-001	ITG SHIM 0.2	
20	17-003	ITG GEAR ADJUSTING SHIM 0.50	Varies
21	09-012	ITG M18 X 1.5P PLUG (NON-VENT)	
22	18-022	ITG SPLITTER BOX HOUSING	Obsolete
23	09-011	ITG M18 X 1.5P PLUG VENTED	

Gearbox Divider 1000 RPM (826-253C) OMNI

Applies to Models: RCFM45180

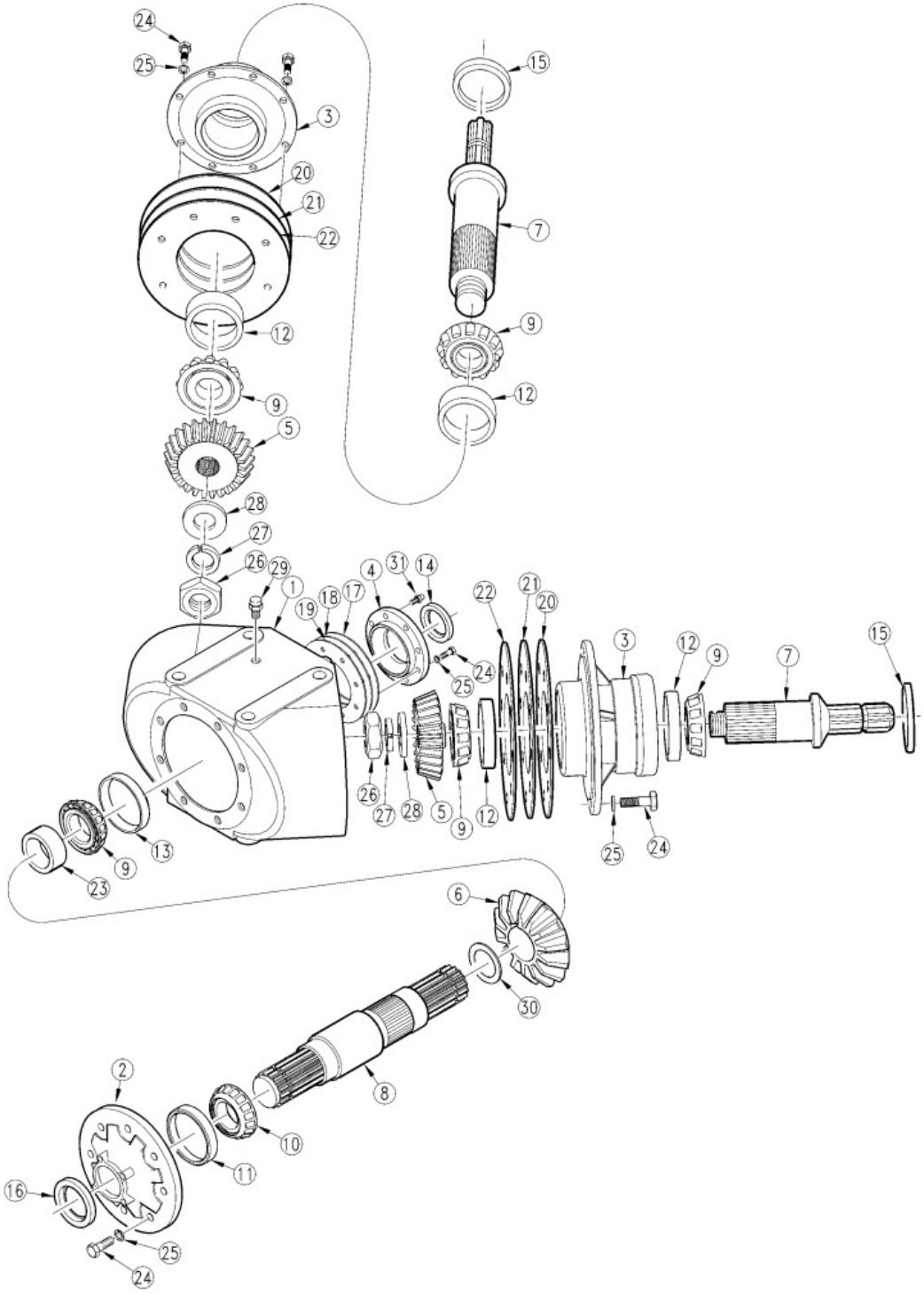

Gearbox Divider 1000 RPM (826-253C) OMNI

Applies to Models: RCFM45180

Ref.	Part No.	Part Description	Comments
	DWG26954	Drawing Image Number	
	826-253C	DIV.BOX RCD101 1.75-20 1.3:1 *	
1	010063	OMNI HOUSING RCD101HD	
2	020162	OMNI INPUT CAP	
3	020061	OMIN CANTILEVERED OUTPUT CAP	
4	020110	OMNI OUTPUT CAP	
5	030194	OMNI GEAR, 26T	
6	030193	OMNI PINION, 20T	
7	040074	OMNI OUTPUT SHAFT 1.36-6A SHRT	
8	040123	OMNI INPUT SHAFT	
9	050008	OMNI BRG CONE - 368	
10	050012	OMNI BRG CONE -LM603049	
11	050013	OMNI BRG CUP - LM 603014	
12	050014	BRG CUP - 362A, OMNI	
13	050015	BRG CUP - 362, OMNI	
14	060005	INPUT SEAL, OMNI	
15	060020	OMNI OUTPUT SEAL	
16	060051	RPBY 05-007	
17	070057	OMNI GASKET, 0.30MM	
18	070058	OMNI GASKET, 0.15MM	
19	070151	OMNI INPUT GASKET, 0.10MM	
20	070140	OMNI GASKET 0.30MM	
21	070141	OMNI GASKET 0.15MM	
22	070142	OMNI GASKET 0.10MM	
23	090003	SPACER, OMNI	
24	802-079C	HHCS 3/8-16X1 1/4 GR5	
25	804-013C	WASHER LOCK SPRING 3/8 PLT	
26	120025	OMNI LOCKNUT, TN-06	
27	130030	OMNI LOCKWASHER, TW-06	
28	130021	OMNI FLAT WASHER	
29	8.6.7.00269	RPBY 826-497C	
29	140033	RPBY 8.6.7.00269	Obsolete
30	200003	OMNI RETAINING RING	
31	140017	OMNI PLUG PIPE SQ HD1/8-27NPTF	

Gearbox Divider 540 RPM (826-068C) ITG (S/N 111502-)

Applies to Models: RCF45180

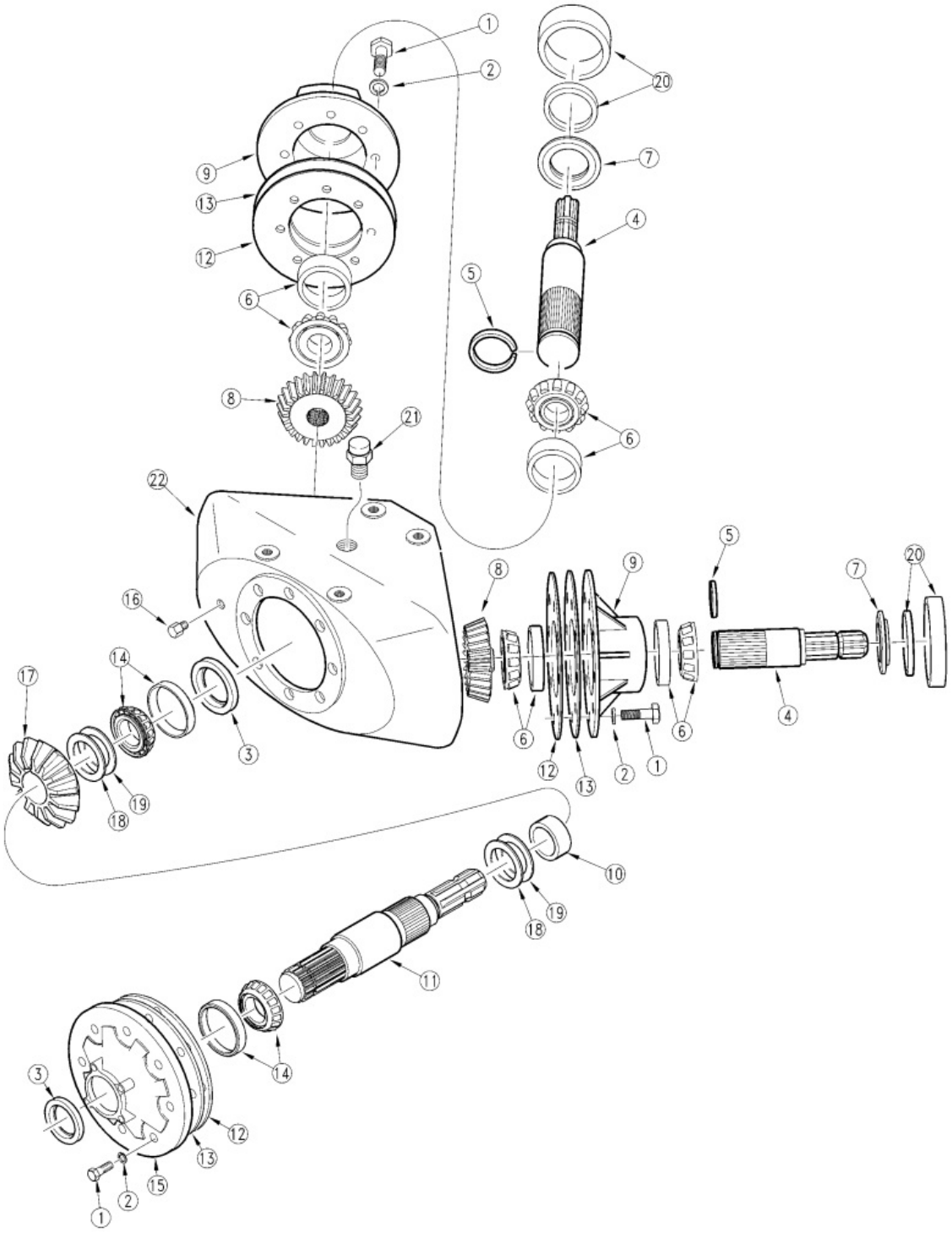

Gearbox Divider 540 RPM (826-068C) ITG (S/N 111502-)

Applies to Models: RCF45180

Ref.	Part No.	Part Description	Comments
	DWG14331	Drawing Image Number	
	826-068C	RPBY 826-242C *	Obsolete
1	06-003	ITG M10 X 1.5 X 30 CAP SCREW	
2	804-158C	WASHER SPRING LOCK M10 PLT	
2	07-001	RPBY 804-158C	Obsolete
3	05-007	ITG INPUT SHAFT OIL SEAL	
4	02-014	ITG HORIZONTAL OUTPUT SHAFT	
5	21-001	ITG RETAINING RING	
6	822-214C	BRG CUP/CONE SET 30210	Includes bearing and race
6	04-011	RPBY 822-214C	(Obsolete) Includes bearing and race
7	11001	NUT MALE BRAKE LINE M10X1.25	
8	03-022	ITG GEAR 20 TOOTH	
9	20-009	ITG HORIZONTAL HUB CAP	
10	10-015	ITG INPUT SHAFT SPACER	
11	02-032	ITG INPUT SHAFT	
12	08-006	ITG INPUT CAP GASKET 0.10MM	Varies
13	08-007	ITG INPUT CAP GASKET 0.25MM	Varies
14	04-017	RPBY 8.0.9.00143	
15	20-001	ITG INPUT CAP	
16	09-005	RPBY 140017	
17	03-023	ITG GEAR 23 TOOTH	
18	17-002	ITG GEAR ADJUSTING SHIM 0.30	Varies
19	17-003	ITG GEAR ADJUSTING SHIM 0.50	Varies
20	05-020	SEAL ADAPTOR	
21	8.6.7.00269	RPBY 826-497C	
21	140033	RPBY 8.6.7.00269	Obsolete
21	09-008	RPBY 140033	
22	18-014	ITG HOUSING	

Gearbox Divider 540 RPM (826-068C) ITG (S/N 111503+)

Applies to Models: RCF45180

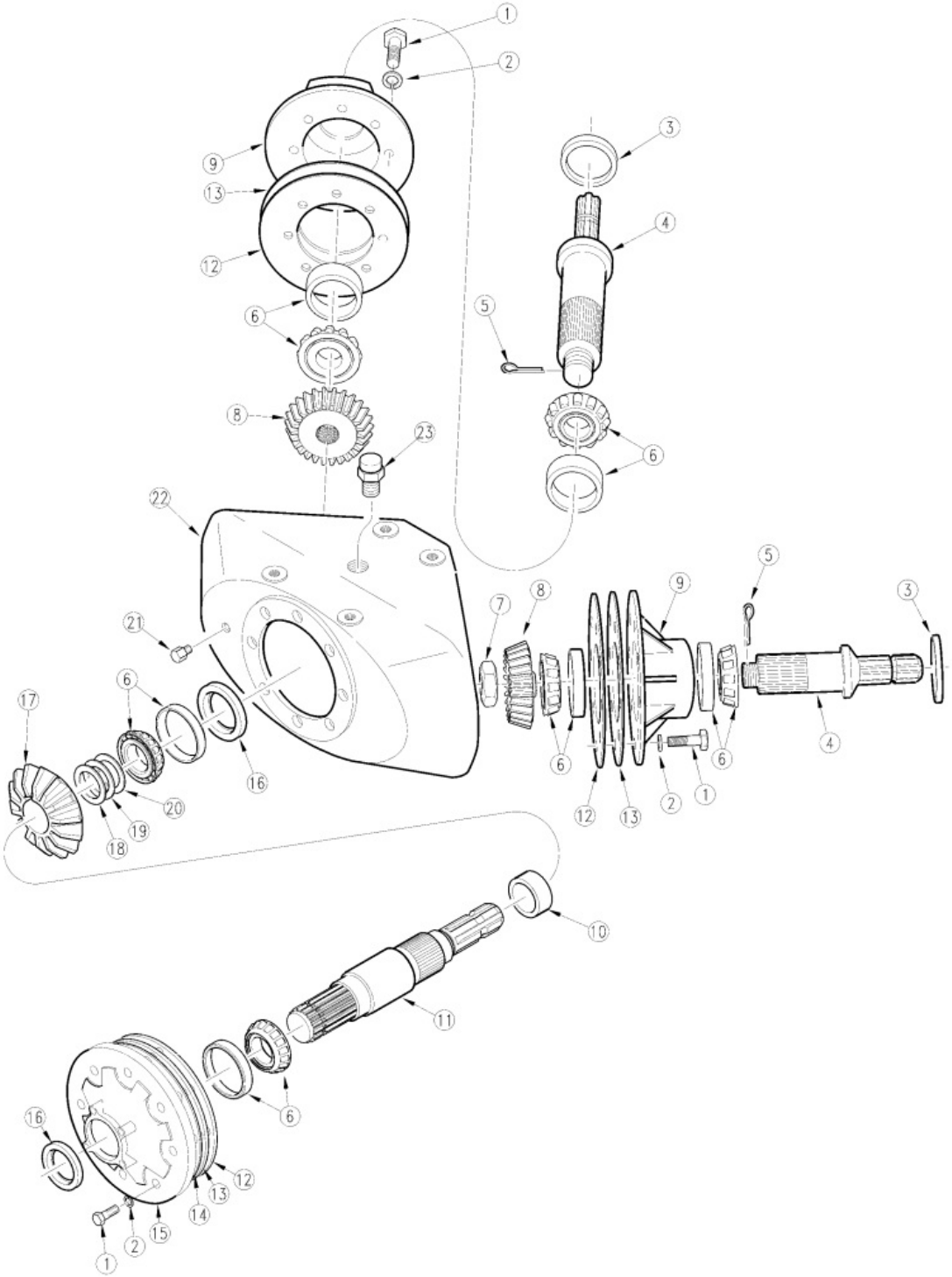

Gearbox Divider 540 RPM (826-068C) ITG (S/N 111503+)

Applies to Models: RCF45180

Ref.	Part No.	Part Description	Comments
	DWG 13870	Drawing Image Number	
	826-068C	RPBY 826-242C *	Obsolete
1	06-003	ITG M10 X 1.5 X 30 CAP SCREW	
2	804-158C	WASHER SPRING LOCK M10 PLT	
2	07-001	RPBY 804-158C	Obsolete
3	05-012B	ITG OUTPUT SEAL 58X95X10 THK	Measurement is required before ordering
3	05-012A	RPBY 0.267.7104.00	Measurement is required before ordering
4	02-017	ITG HORIZONTAL OUTPUT SHAFT	
5	12-008	ITG COTTER PIN	
6	822-214C	BRG CUP/CONE SET 30210	
6	04-011	RPBY 822-214C	Obsolete
7	11-012	ITG BRG ADJ. NUT	
8	03-040	ITG 20 TOOTH GEAR	
9	20-018	ITG HORIZONTAL HUB CAP	Obsolete
10	10-001	ITG SPACER	
11	02-005	ITG INPUT SHAFT SPLITTER BOX	
12	08-006	ITG INPUT CAP GASKET 0.10MM	Varies
13	08-007	ITG INPUT CAP GASKET 0.25MM	Varies
14	08-008	ITG IN & OUT CAP GASKET 0.45MM	Varies
15	20-019	ITG INPUT CAP SPLITTER BOX	
16	05-007	ITG INPUT SHAFT OIL SEAL	
17	03-041	ITG 23 TOOTH GEAR	
18	17-002	ITG GEAR ADJUSTING SHIM 0.30	Varies
19	17-001	ITG SHIM 0.2	
20	17-003	ITG GEAR ADJUSTING SHIM 0.50	Varies
21	09-012	ITG M18 X 1.5P PLUG (NON-VENT)	
22	18-022	ITG SPLITTER BOX HOUSING	Obsolete
23	09-011	ITG M18 X 1.5P PLUG VENTED	

Gearbox Divider 540 RPM (826-242C) OMNI

Applies to Models: RCF45180

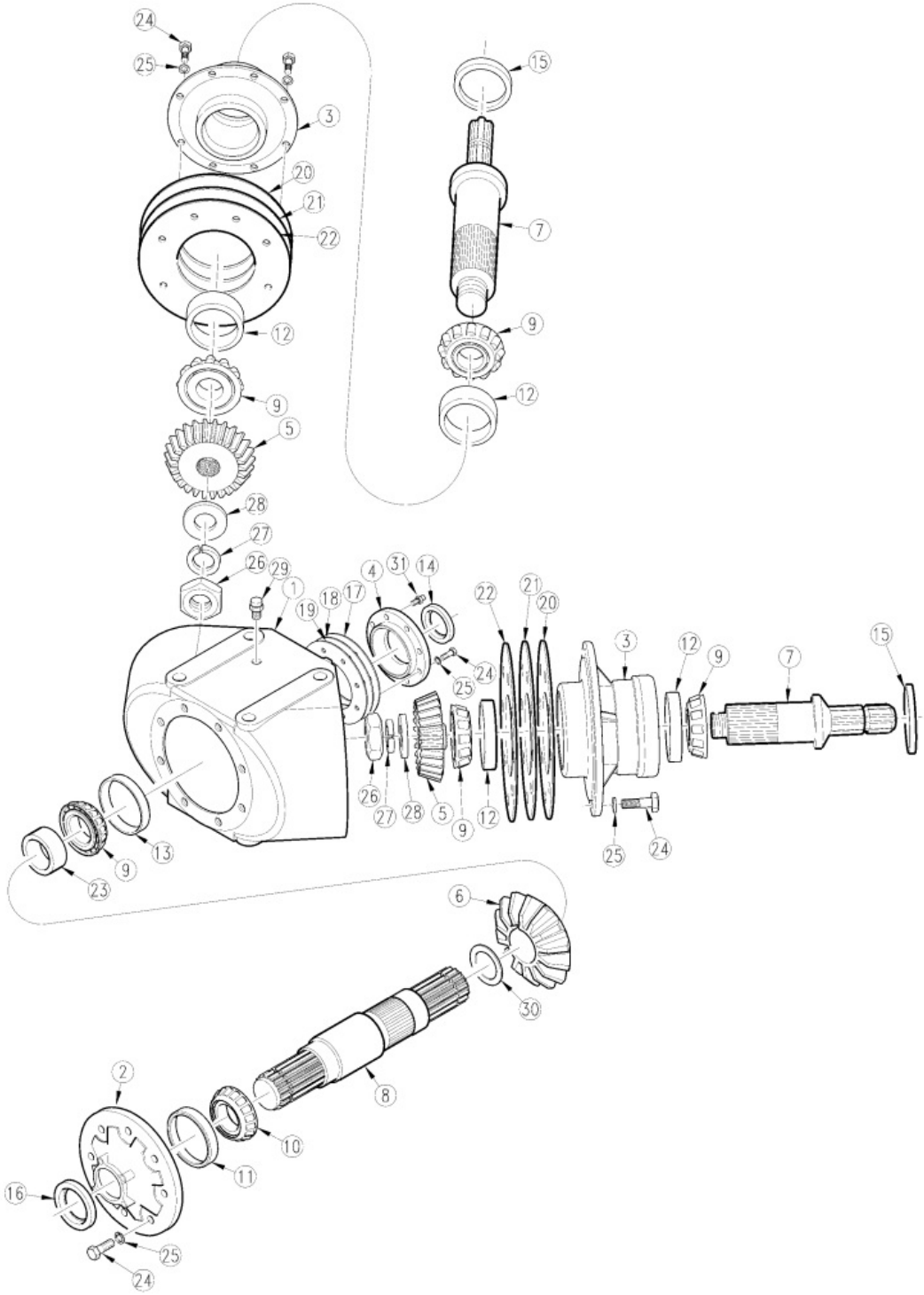

Gearbox Divider 540 RPM (826-242C) OMNI

Applies to Models: RCF45180

Ref.	Part No.	Part Description	Comments
	DWG16456	Drawing Image Number	
	826-242C	DIV. BOX RCD101 1.75-20 1:1.15 *	
1	010063	OMNI HOUSING RCD101HD	
2	020162	OMNI INPUT CAP	
3	020061	OMIN CANTILEVERED OUTPUT CAP	
4	020110	OMNI OUTPUT CAP	
5	030192	OMNI GEAR, 23T	
6	030191	OMNI PINION, 20T	
7	040074	OMNI OUTPUT SHAFT 1.36-6A SHRT	
8	040123	OMNI INPUT SHAFT	
9	050008	OMNI BRG CONE - 368	
10	050012	OMNI BRG CONE -LM603049	
11	050013	OMNI BRG CUP - LM 603014	
12	050014	BRG CUP - 362A, OMNI	
13	050015	BRG CUP - 362, OMNI	
14	060005	INPUT SEAL, OMNI	
15	060020	OMNI OUTPUT SEAL	
16	060051	RPBY 05-007	
17	070057	OMNI GASKET, 0.30MM	
18	070058	OMNI GASKET, 0.15MM	
19	070151	OMNI INPUT GASKET, 0.10MM	
20	070140	OMNI GASKET 0.30MM	
21	070141	OMNI GASKET 0.15MM	
22	070142	OMNI GASKET 0.10MM	
23	090003	SPACER, OMNI	
24	802-079C	HHCS 3/8-16X1 1/4 GR5	
25	804-013C	WASHER LOCK SPRING 3/8 PLT	
26	120025	OMNI LOCKNUT, TN-06	
27	130030	OMNI LOCKWASHER, TW-06	
28	130021	OMNI FLAT WASHER	
29	8.6.7.00269	RPBY 826-497C	
29	140033	RPBY 8.6.7.00269	Obsolete
30	200003	OMNI RETAINING RING	
31	140017	OMNI PLUG PIPE SQ HD1/8-27NPTF *	
		Notes: Oil Type 80-90W Capacity 4.5 Pints	

Gearbox Left Deck 1000 RPM (826-073C) ITG

Applies to Models: RCFM45180

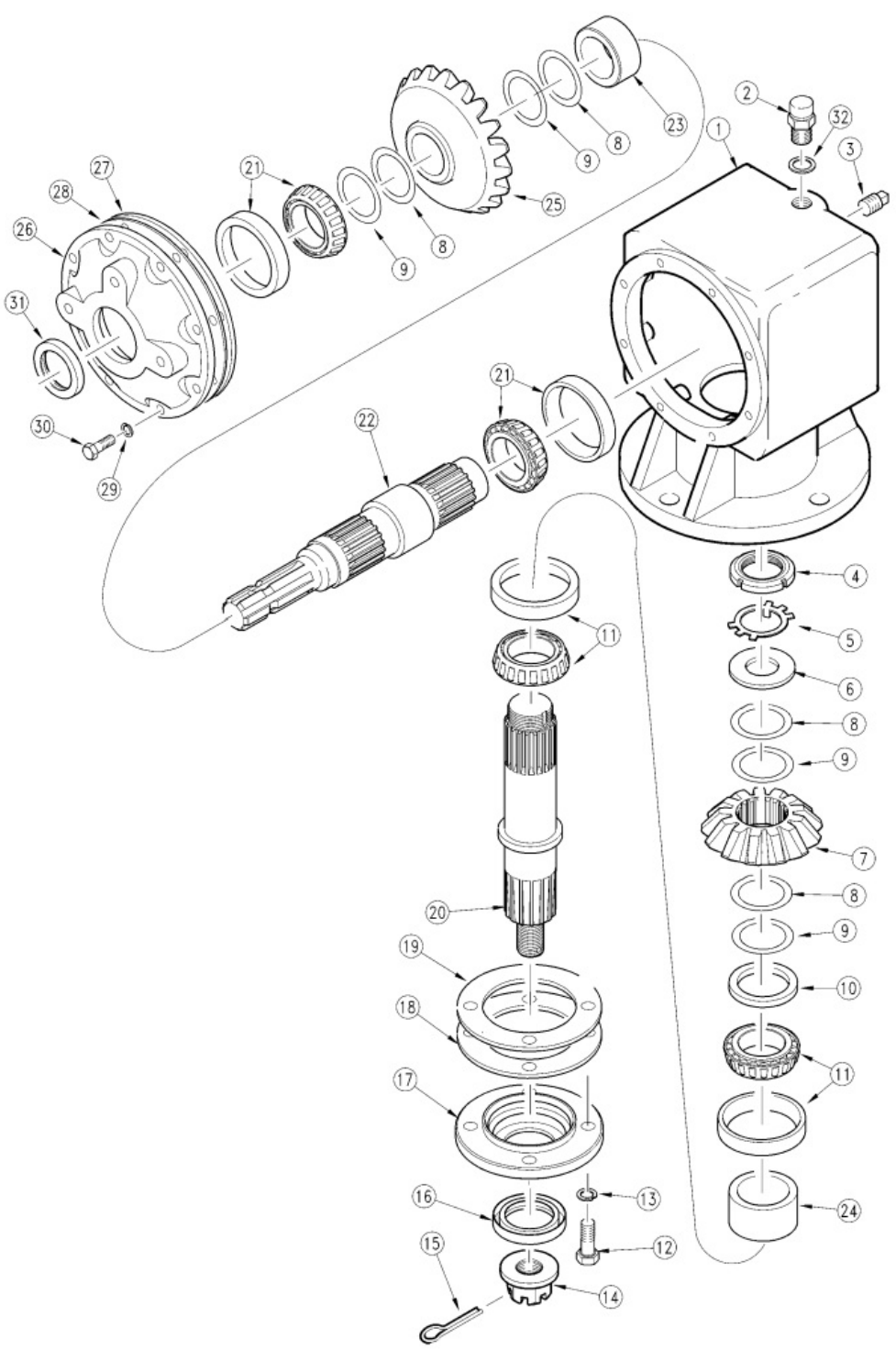

Gearbox Left Deck 1000 RPM (826-073C) ITG

Applies to Models: RCFM45180

Ref.	Part No.	Part Description	Comments
	DWG26944	Drawing Image Number	
	826-073C	RPBY 826-038C *	Obsolete
1	18-001	ITG HOUSING	
2	09-011	ITG M18 X 1.5P PLUG VENTED	
2	8.6.7.00269	RPBY 826-497C	
2	140033	RPBY 8.6.7.00269	Obsolete
2	09-008	RPBY 140033	Obsolete
3	09-012	ITG M18 X 1.5P PLUG (NON-VENT)	
3	09-005	RPBY 140017	
4	11-003	ITG BRG ADJUSTING NUT	
4	11-012	ITG BRG ADJ. NUT	
5	07-004	ITG BRG NUT LOCKWASHER	Not used with 11-012
6	07-006	ITG FLAT WASHER	Not used with 11-012
7	03-006	ITG INPUT GEAR 14 TOOTH	
8	17-003	ITG GEAR ADJUSTING SHIM 0.50	
9	17-002	ITG GEAR ADJUSTING SHIM 0.30	
10	10-016	ITG GEAR MOUNTING SPACER	
11	822-214C	BRG CUP/CONE SET 30210	Includes bearing and race
11	04-011	RPBY 822-214C	(Obsolete) Includes bearing and race
12	06-002	ITG M12 X 1.75 X 38 CAP SCREW	
13	07-002	RPBY 804-159C	
14	11-008	ITG 1-14 FLANGED HEX NUT	
15	805-017C	PIN COTTER 3/16 X 1 3/4 PLT	
16	05-008	ITG OUTPUT SHAFT OIL SEAL	
17	20-002	ITG OUTPUT CAP	
18	08-002	ITG OUTPUT CAP GASKET 0.25MM	
19	08-001	ITG OUTPUT CAP GASKET 0.10MM	
20	02-004	ITG STD 75 OUTPUT SHAFT	
21	04-017	RPBY 8.0.9.00143	
22	02-002	ITG INPUT SHAFT	
23	11001	NUT MALE BRAKE LINE M10X1.25	
24	10-003	ITG OUTPUT BRG SPACER	
25	03-007	ITG 17 TOOTH OUTPUT GEAR	
26	20-001	ITG INPUT CAP	
27	08-007	ITG INPUT CAP GASKET 0.25MM	
28	08-006	ITG INPUT CAP GASKET 0.10MM	
29	804-158C	WASHER SPRING LOCK M10 PLT	
29	07-001	RPBY 804-158C	Obsolete
30	06-003	ITG M10 X 1.5 X 30 CAP SCREW	
31	05-007	ITG INPUT SHAFT OIL SEAL	
32	07-022	ITG SEALING WASHER	

Gearbox Right Deck 1000 RPM (826-075C) ITG

Applies to Models: RCFM45180

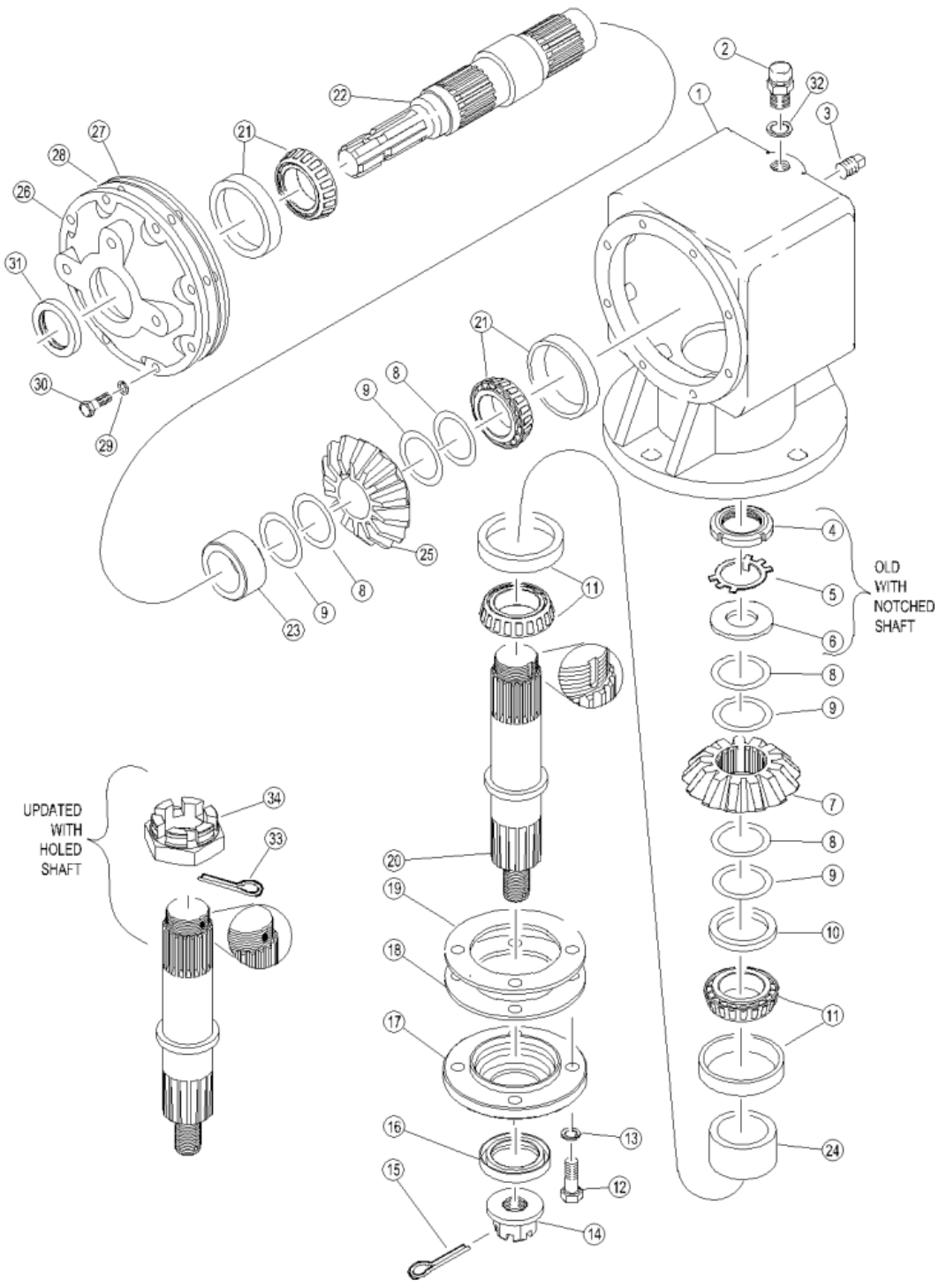

Gearbox Right Deck 1000 RPM (826-075C) ITG

Applies to Models: RCFM45180

Ref.	Part No.	Part Description	Comments
	DWG 26947	Drawing Image Number	
	826-075C	RPBY 826-254C *	Obsolete
1	18-001	ITG HOUSING	
2	09-011	ITG M18 X 1.5P PLUG VENTED	
2	8.6.7.00269	RPBY 826-497C	
2	140033	RPBY 8.6.7.00269	Obsolete
2	09-008	RPBY 140033	Obsolete
3	09-012	ITG M18 X 1.5P PLUG (NON-VENT)	
3	09-005	RPBY 140017	
4	11-003	ITG BRG ADJUSTING NUT	
4	11-012	ITG BRG ADJ. NUT	
5	07-004	ITG BRG NUT LOCKWASHER	Not used with 11-012
6	07-006	ITG FLAT WASHER	Not used with 11-012
7	03-006	ITG INPUT GEAR 14 TOOTH	
8	17-003	ITG GEAR ADJUSTING SHIM 0.50	
9	17-002	ITG GEAR ADJUSTING SHIM 0.30	
10	10-016	ITG GEAR MOUNTING SPACER	
11	822-214C	BRG CUP/CONE SET 30210	Includes bearing and race
11	04-011	RPBY 822-214C	(Obsolete) Includes bearing and race
12	06-002	ITG M12 X 1.75 X 38 CAP SCREW	
13	07-002	RPBY 804-159C	
14	11-008	ITG 1-14 FLANGED HEX NUT	
15	805-017C	PIN COTTER 3/16 X 1 3/4 PLT	
16	05-008	ITG OUTPUT SHAFT OIL SEAL	
17	20-002	ITG OUTPUT CAP	
18	08-002	ITG OUTPUT CAP GASKET 0.25MM	
19	08-001	ITG OUTPUT CAP GASKET 0.10MM	
20	02-004	ITG STD 75 OUTPUT SHAFT	
21	04-017	RPBY 8.0.9.00143	
22	02-002	ITG INPUT SHAFT	
23	11001	NUT MALE BRAKE LINE M10X1.25	
24	10-003	ITG OUTPUT BRG SPACER	
25	03-007	ITG 17 TOOTH OUTPUT GEAR	
26	20-001	ITG INPUT CAP	
27	08-007	ITG INPUT CAP GASKET 0.25MM	
28	08-006	ITG INPUT CAP GASKET 0.10MM	
29	804-158C	WASHER SPRING LOCK M10 PLT	
29	07-001	RPBY 804-158C	Obsolete
30	06-003	ITG M10 X 1.5 X 30 CAP SCREW	
31	05-007	ITG INPUT SHAFT OIL SEAL	
32	07-022	ITG SEALING WASHER	
33	12-008	ITG COTTER PIN	
34	11-012	ITG BRG ADJ. NUT	

Gearbox Right Deck 1000 RPM (826-254C) COMER

Applies to Models: RCFM45180

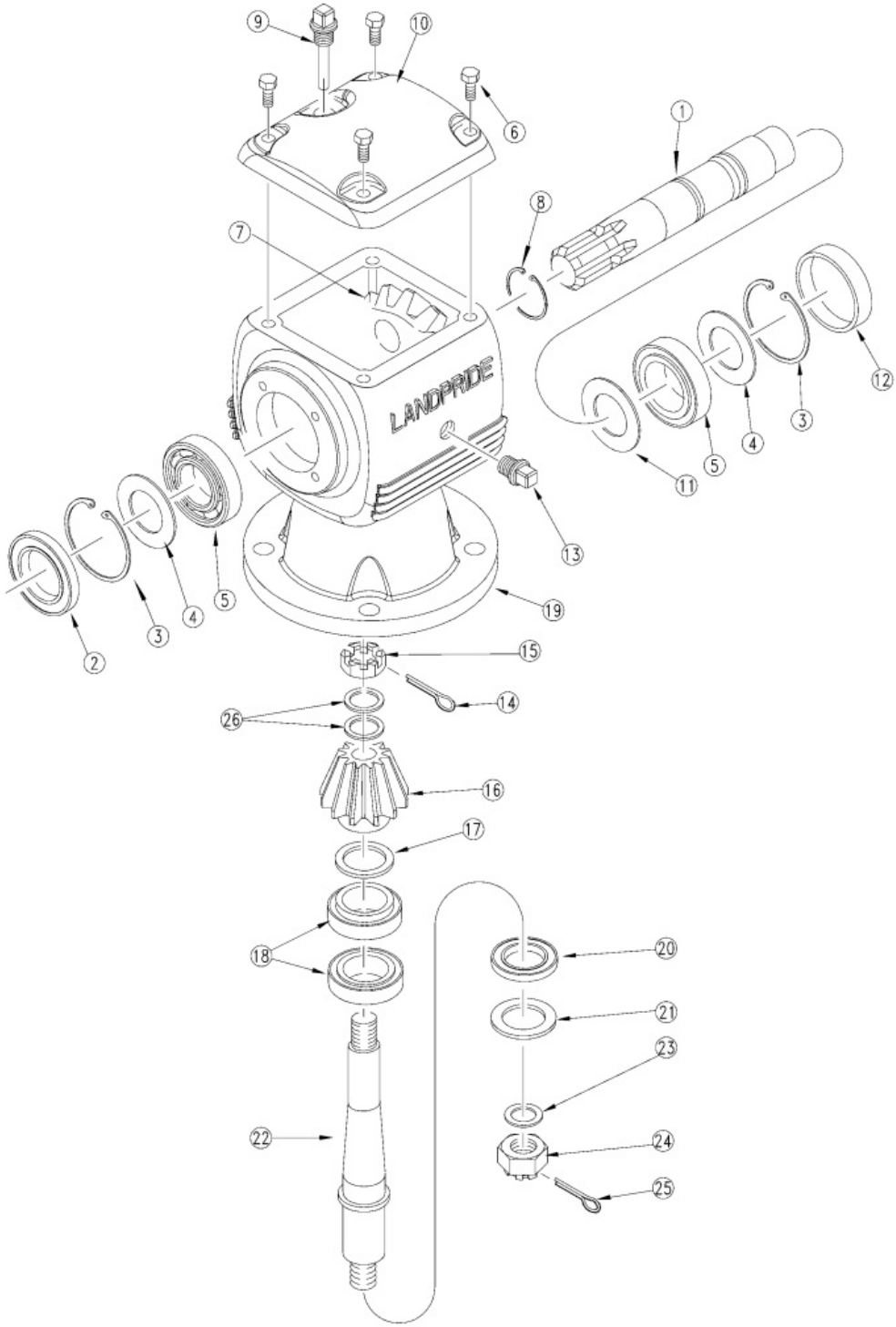

Gearbox Right Deck 1000 RPM (826-254C) COMER

Applies to Models: RCFM45180

Ref.	Part No.	Part Description	Comments
	DWG 27557	Drawing Image Number	
	826-254C	GBOX RC71 REV. 1:1.21 1 3/8-6 *	
1	0.210.2000.00	CO INPUT SHAFT 1.38-6	
2	8.7.1.02348	CO DUST LIP (45X85X10)	
2	8.7.3.00331	RPBY 8.7.1.02348	Obsolete
3	8.5.2.00332	CO SNAP RING UNI 7437	
4	A.709.500	COMER SHIM KIT	
4	0.709.7500.00	RPBY A.709.500	Obsolete
5	8.0.9.00143	CO BRG 30209 TAPERED	
6	8.1.1.00501	CO BOLT M10X22 HHB	
7	2.210.5001.00	CO PINION Z18 M6	
7	0.210.6000.00	RPBY 2.210.5001.00	Obsolete
8	8.5.1.00533	CO SNAP RING 50 UNI7435	
9	826-490C	COMER U0.210.7100.00 DIPSTICK	
10	0.210.1300.00	CO COVER	
11	0.252.7525.00	CO SHIM 45.3X2.5	
12	0.121.7101.00	CO CAP	
13	8.6.6.00201	CO PLUG 3/8 (SOLID PLUG)	
14	8.4.7.02265	CO COTTER PIN B 5X60	
15	0.132.7107.00	CO NUT M40X1.5	
16	2.210.5001.00	CO PINION Z18 M6	
16	0.210.5000.00	RPBY 2.210.5001.00	Obsolete
17	A.712.500	COMER SHIM KIT	
17	0.712.7500.00	RPBY A.712.500	Obsolete
18	822-214C	BRG CUP/CONE SET 30210	
18	04-011	RPBY 822-214C	(Obsolete) Includes bearing and race
18	8.0.9.00469	RPBY 04-011	(Obsolete) Includes bearing and race
19	0.210.0300.00	CO CASTING & MACHINE	
20	8.7.1.01107	CO SEAL (50X90X10)	
21	0.139.7100.00	CO SEAL RETAINER	
22	0.210.3000.00	CO OUTPUT SHAFT	
23	0.139.7101.00	CO BLANK WASHER	
24	8.2.2.00555	CO NUT, CASTLE M30 X 2	
25	8.4.7.00146	COTTER PIN B6 X 60	
26	0.285.7510.00	CO SHIM 40.3 X 61.7 X 1	

Gearbox Right Deck 1000 RPM (826-254C) OMNI

Applies to Models: RCFM45180

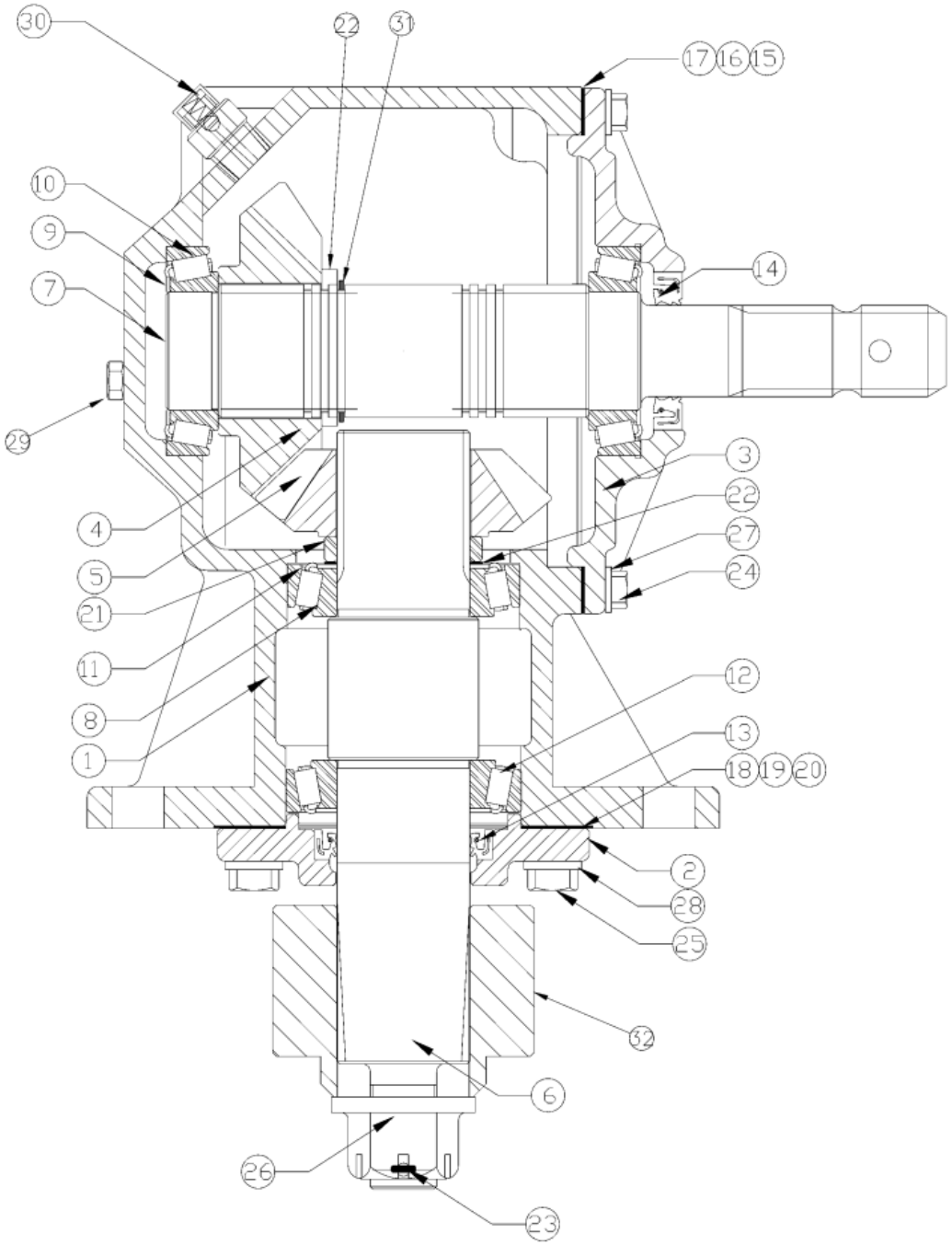

Gearbox Right Deck 1000 RPM (826-254C) OMNI

Applies to Models: RCFM45180

Ref.	Part No.	Part Description	Comments
	DWG26640	Drawing Image Number	
	826-254C	GBOX RC71 REV. 1:1.21 1 3/8-6 *	
1	10160	OMNI HOUSING RC71SS	
2	20005	OMNI OUTPUT CAP	
3	20162	OMNI INPUT CAP	
4	30040	INPUT GEAR - 17 T., OMNI	
5	30041	OUTPUT PINION - 14 T., OMNI	
6	40112	OUTPUT SHAFT, OMNI	
7	40135	OMNI INPUT SHAFT 1 3/8-6A SPL	
8	50008	OMNI BRG CONE - 368	
9	50012	OMNI BRG CONE -LM603049	
10	50013	OMNI BRG CUP - LM 603014	
11	50014	BRG CUP - 362A, OMNI	
12	50015	BRG CUP - 362, OMNI	
13	60004	OMNI OUTPUT SEAL	
14	60005	INPUT SEAL, OMNI	
15	70140	OMNI GASKET 0.30MM	
16	70141	OMNI GASKET 0.15MM	
17	70142	OMNI GASKET 0.10MM	
18	70143	OMNI GASKET 0.30MM	
19	70144	OMNI GASKET 0.15MM	
20	70145	OMNI GASKET 0.10MM	
21	90015	SPACER, OMNI	
22	90073	OMNI SHIM .025	As Required
23	100001	RPBY F6330550	
24	802-079C	HHCS 3/8-16X1 1/4 GR5	
25	110002	OMNI SCREW,HEX 1/2-13UNC GR5	
26	120050	OMNI NUT HEX SLOTTED, 1-14UNC	
27	130002	RPBY 804-013C	
28	130003	OMNI LOCKWASHER 1/2" SPLIT TYP	
29	140017	OMNI PLUG PIPE SQ HD1/8-27NPTF	
30	826-497C	COMER VENT #8.6.7.00269	
31	200003	OMNI RETAINING RING	
32	210001	OMNI BLADE HUB	

Gearbox Right Deck 540 RPM (826-070C) ITG

Applies to Models: RCF45180

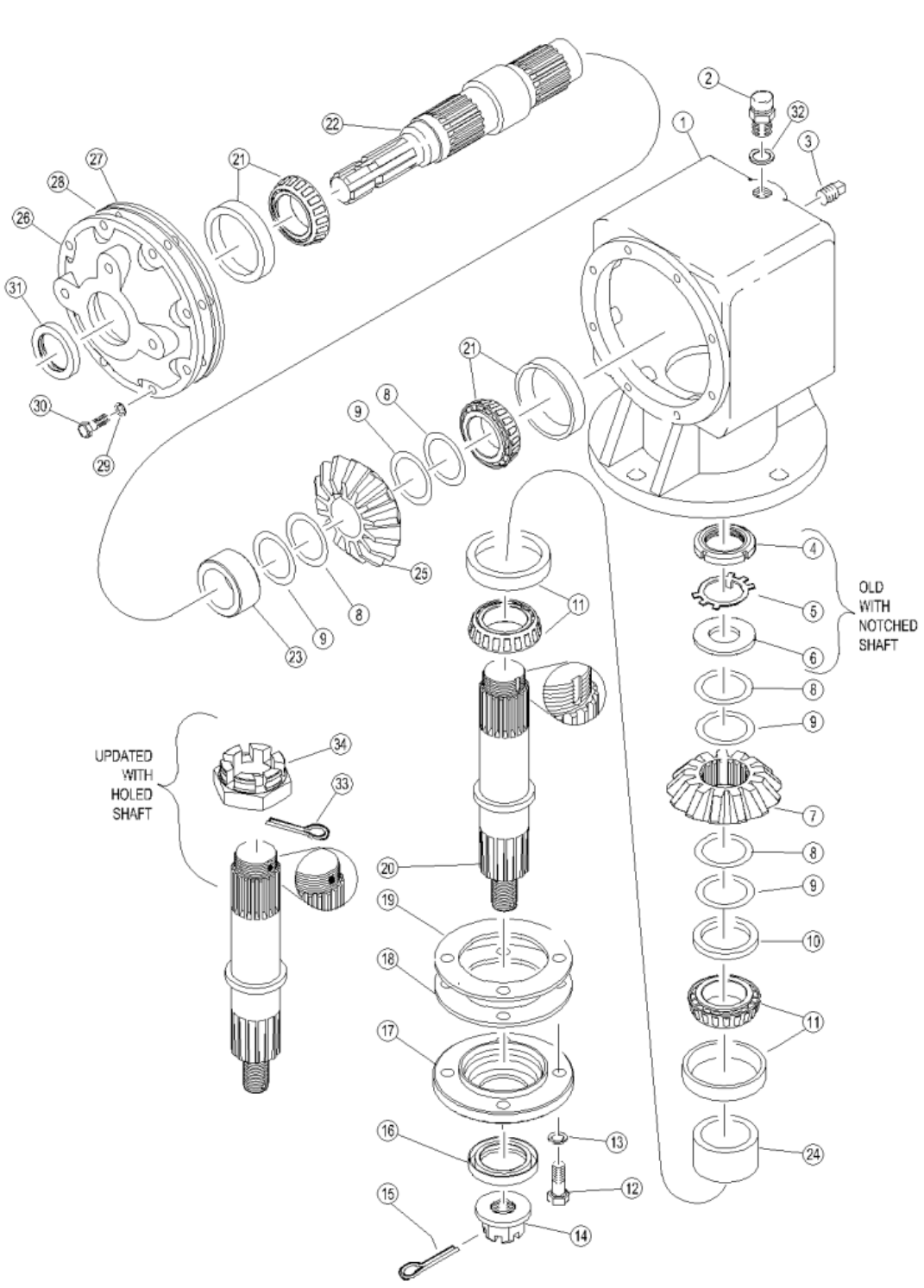

Gearbox Right Deck 540 RPM (826-070C) ITG

Applies to Models: RCF45180

Ref.	Part No.	Part Description	Comments
	DWG 13898	Drawing Image Number	
	826-070C	RPBY 826-241C *	Obsolete
1		ITG HOUSING	
2	09-011	ITG M18 X 1.5P PLUG VENTED	
2	8.6.7.00269	RPBY 826-497C	
2	140033	RPBY 8.6.7.00269	Obsolete
2	09-008	RPBY 140033	Obsolete
3	09-012	ITG M18 X 1.5P PLUG (NON-VENT)	
3	09-005	RPBY 140017	
4	11-003	ITG BRG ADJUSTING NUT	
4	11-012	ITG BRG ADJ. NUT	
5	07-004	ITG BRG NUT LOCKWASHER	Not used with 11-012
6	07-006	ITG FLAT WASHER	Not used with 11-012
7	03-008	ITG 13 TOOTH OUTPUT GEAR	Obsolete
8	17-003	ITG GEAR ADJUSTING SHIM 0.50	
9	17-002	ITG GEAR ADJUSTING SHIM 0.30	
10	10-016	ITG GEAR MOUNTING SPACER	
11	822-214C	BRG CUP/CONE SET 30210	Includes bearing and race
11	04-011	RPBY 822-214C	(Obsolete) Includes bearing and race
12	06-002	ITG M12 X 1.75 X 38 CAP SCREW	
13	07-002	RPBY 804-159C	
14	11-008	ITG 1-14 FLANGED HEX NUT	
15	805-017C	PIN COTTER 3/16 X 1 3/4 PLT	
16	05-008	ITG OUTPUT SHAFT OIL SEAL	
17	20-002	ITG OUTPUT CAP	
18	08-002	ITG OUTPUT CAP GASKET 0.25MM	
19	08-001	ITG OUTPUT CAP GASKET 0.10MM	
20	02-004	ITG STD 75 OUTPUT SHAFT	
21	04-017	RPBY 8.0.9.00143	
22	02-002	ITG INPUT SHAFT	
23	10-001	ITG SPACER	
24	10-003	ITG OUTPUT BRG SPACER	
25	03-009	ITG INPUT GEAR 19 TOOTH	
26	20-001	ITG INPUT CAP	
27	08-007	ITG INPUT CAP GASKET 0.25MM	
28	08-006	ITG INPUT CAP GASKET 0.10MM	
29	804-158C	WASHER SPRING LOCK M10 PLT	
29	07-001	RPBY 804-158C	Obsolete
30	06-003	ITG M10 X 1.5 X 30 CAP SCREW	
31	05-007	ITG INPUT SHAFT OIL SEAL	
32	07-022	ITG SEALING WASHER	
33	12-008	ITG COTTER PIN	
34	11-012	ITG BRG ADJ. NUT	

Gearbox Right Deck 540 RPM (826-241C) COMER (Service Only)

Applies to Models: RCF45180

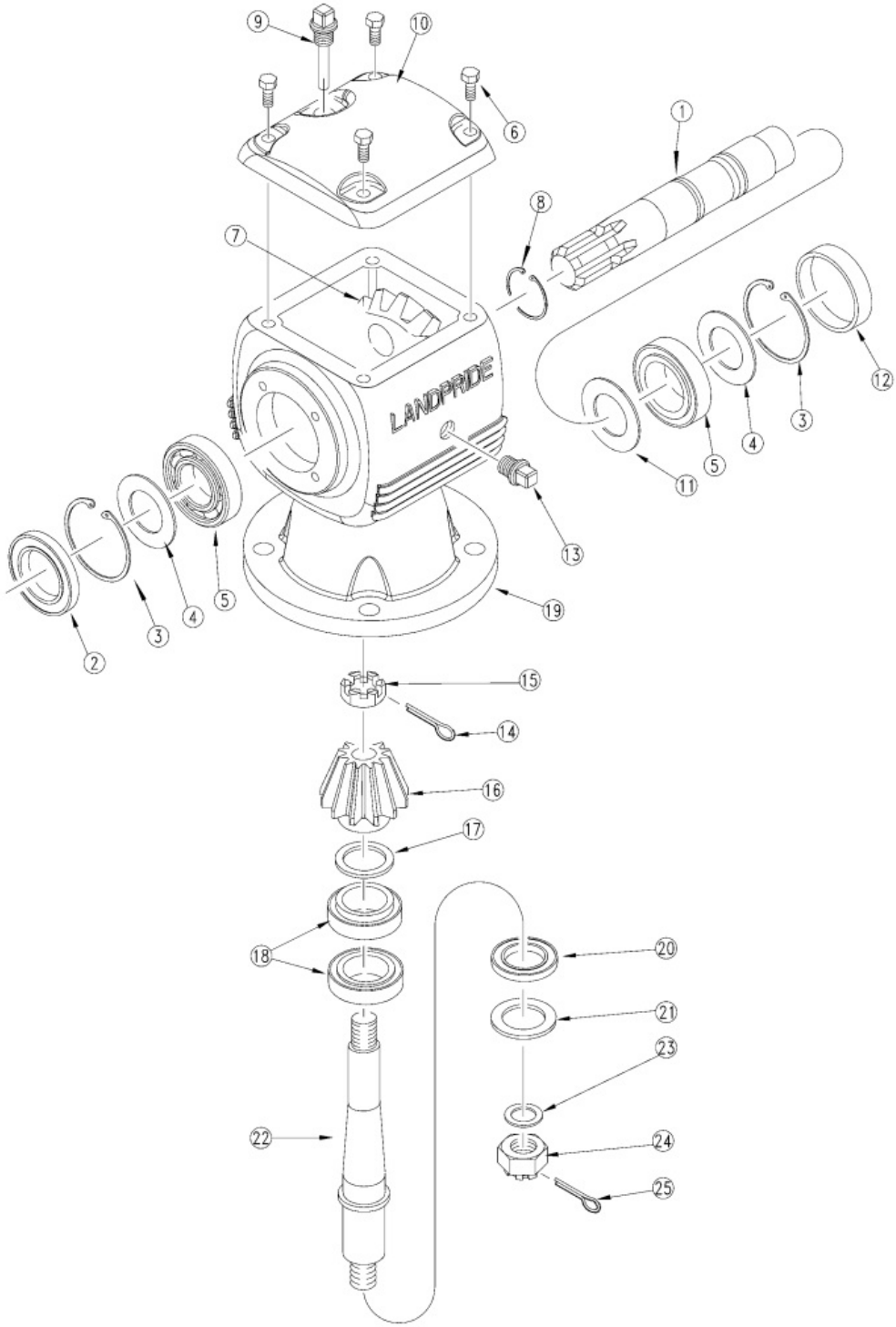

Gearbox Right Deck 540 RPM (826-241C) COMER (Service Only)

Applies to Models: RCF45180

Ref.	Part No.	Part Description	Comments
	DWG 27556	Drawing Image Number	
	826-241C	GBOX RC71 1-3/8"-6A 1:1.46 CCW *	
1	0.210.2000.00	CO INPUT SHAFT 1.38-6	
2	8.7.1.02348	CO DUST LIP (45X85X10)	
2	8.7.3.00331	RPBY 8.7.1.02348	Obsolete
3	8.5.2.00332	CO SNAP RING UNI 7437	
4	A.709.500	COMER SHIM KIT	
4	0.709.7500.00	RPBY A.709.500	Obsolete
5	8.0.9.00143	CO BRG 30209 TAPERED	
6	8.1.1.00501	CO BOLT M10X22 HHB	
7	0.210.6001.00	RPBY 2.210.5002.00	
8	8.5.1.00533	CO SNAP RING 50 UNI7435	
9	826-490C	COMER U0.210.7100.00 DIPSTICK	
10	0.210.1300.00	CO COVER	
11	0.252.7525.00	CO SHIM 45.3X2.5	
12	0.121.7101.00	CO CAP	
13	8.6.6.00201	CO PLUG 3/8 (SOLID PLUG)	
14	8.4.7.02265	CO COTTER PIN B 5X60	
15	0.132.7106.00	CO NUT M30 X 1.5	
16	0.210.5001.00	RPBY 2.210.5002.00	Obsolete
17	A.712.500	COMER SHIM KIT	
17	0.712.7500.00	RPBY A.712.500	Obsolete
18	822-214C	BRG CUP/CONE SET 30210	Includes bearing and race
18	04-011	RPBY 822-214C	(Obsolete) Includes bearing and race
19	0.210.0300.00	CO CASTING & MACHINE	
20	8.7.1.01107	CO SEAL (50X90X10)	
21	0.139.7100.00	CO SEAL RETAINER	
22	0.210.3001.00	CO OUTPUT SHAFT	
23	0.139.7101.00	CO BLANK WASHER	
24	8.2.2.00555	CO NUT, CASTLE M30 X 2	
25	8.4.7.00146	COTTER PIN B6 X 60 *	
		Notes: Oil Type 80-90W Capacity 5 Pints	

Gearbox Right Deck 540 RPM (826-241C) ITG (Service Only)

Applies to Models: RCF45180

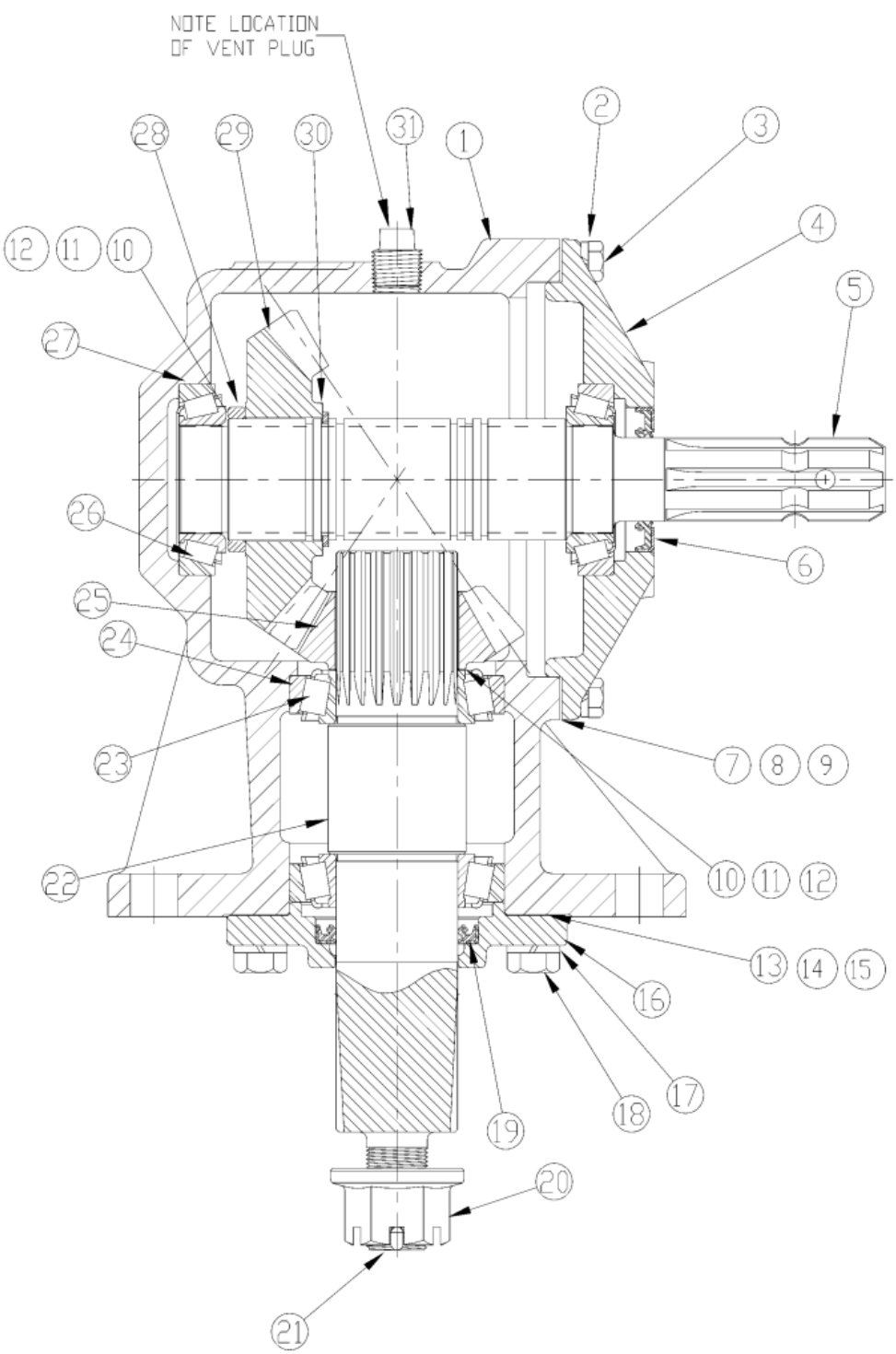

Gearbox Right Deck 540 RPM (826-241C) ITG (Service Only)

Applies to Models: RCF45180

Ref.	Part No.	Part Description	Comments
	DWG 25626	Drawing Image Number	
	826-241C	GBOX RC71 1-3/8"-6A 1:1.46 CCW *	
1	18-027	ITG HOUSING	
2	804-158C	WASHER SPRING LOCK M10 PLT	
3	06-017	ITG HEX HEAD CAP SCREW	
4	20-026	ITG INPUT CAP	
5	02-054	ITG INPUT SHAFT	
6	05-014	RPBY 060005	
7	08-006	ITG INPUT CAP GASKET 0.10MM	
8	08-007	ITG INPUT CAP GASKET 0.25MM	
9	08-008	ITG IN & OUT CAP GASKET 0.45MM	
10	17-001	ITG SHIM 0.2	
11	17-002	ITG GEAR ADJUSTING SHIM 0.30	
12	17-003	ITG GEAR ADJUSTING SHIM 0.50	
13	08-001	ITG OUTPUT CAP GASKET 0.10MM	
14	08-002	ITG OUTPUT CAP GASKET 0.25MM	
15	08-003	ITG OUTPUT CAP GASKET 0.45MM	
16	20-025	ITG OUTPUT CAP	
17	07-010	ITG LOCKWASHER	
18	06-018	ITG HEX HEAD CAP SCREW	
19	060004	OMNI OUTPUT SEAL	
20	11-008	ITG 1-14 FLANGED HEX NUT	
21	805-017C	PIN COTTER 3/16 X 1 3/4 PLT	
22	02-053	ITG OUTPUT SHAFT	Obsolete
23	050008	OMNI BRG CONE - 368	
23	04-010	RPBY 050008	
24	050015	BRG CUP - 362, OMNI	
24	04-009	RPBY 050015	
25	03-061	ITG 13 TOOTH GEAR	
25	050012	OMNI BRG CONE -LM603049	
26	04-007	RPBY 050012	
27	050013	OMNI BRG CUP - LM 603014	
27	04-008	RPBY 050013	
28	10-027	ITG SPACER	Obsolete
29	03-060	ITG 19 TOOTH GEAR	
30	21-001	ITG RETAINING RING	
31	140000	OMNI PIPE PLUG 1/2" SQ HEAD *	
		Notes: Oil Type 80-90W Capacity 5 Pints	

Gearbox Right Deck 540 RPM (826-241C) OMNI (Service Only)

Applies to Models: RCF45180

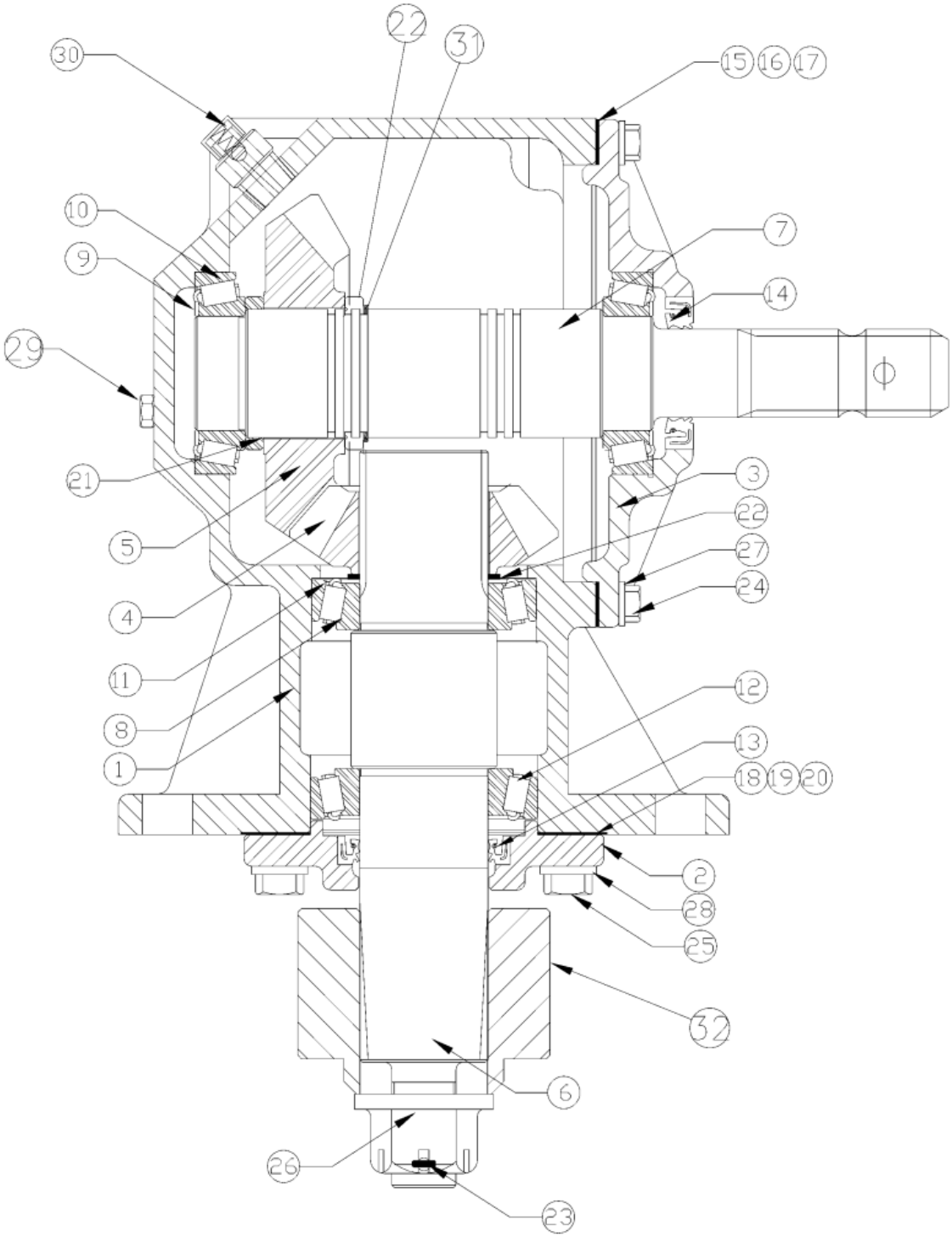

Gearbox Right Deck 540 RPM (826-241C) OMNI (Service Only)

Applies to Models: RCF45180

Ref.	Part No.	Part Description	Comments
	DWG16458	Drawing Image Number	
	826-241C	GBOX RC71 1-3/8"-6A 1:1.46 CCW *	
1	10160	OMNI HOUSING RC71SS	
2	20005	OMNI OUTPUT CAP	
3	20162	OMNI INPUT CAP	
4	30038	OUTPUT PINION - 13 T., OMNI	
5	30039	INPUT GEAR - 19 T., OMNI	
6	40112	OUTPUT SHAFT, OMNI	
7	40135	OMNI INPUT SHAFT 1 3/8-6A SPL	
8	50008	OMNI BRG CONE - 368	
9	50012	OMNI BRG CONE -LM603049	
10	50013	OMNI BRG CUP - LM 603014	
11	50014	BRG CUP - 362A, OMNI	
12	50015	BRG CUP - 362, OMNI	
13	60004	OMNI OUTPUT SEAL	
14	60005	INPUT SEAL, OMNI	
15	70140	OMNI GASKET 0.30MM	
16	70141	OMNI GASKET 0.15MM	
17	70142	OMNI GASKET 0.10MM	
18	70143	OMNI GASKET 0.30MM	
19	70144	OMNI GASKET 0.15MM	
20	70145	OMNI GASKET 0.10MM	
21	90055	SPACER, OMNI 1:1.46 & 1:1.93	
22	90073	OMNI SHIM .025	As Required
23	100001	RPBY F6330550	
24	802-079C	HHCS 3/8-16X1 1/4 GR5	
25	110002	OMNI SCREW,HEX 1/2-13UNC GR5	
26	120050	OMNI NUT HEX SLOTTED, 1-14UNC	
27	130002	RPBY 804-013C	
28	130003	OMNI LOCKWASHER 1/2" SPLIT TYP	
29	140017	OMNI PLUG PIPE SQ HD1/8-27NPTF	
30	826-497C	COMER VENT #8.6.7.00269	
31	200003	OMNI RETAINING RING	
32	210001	OMNI BLADE HUB *	
		Notes: Oil Type 80-90W Capacity 5 Pints	

Hydraulic 3-Spool Control Valve Kit

Applies to Models: RCF45180, RCFM45180

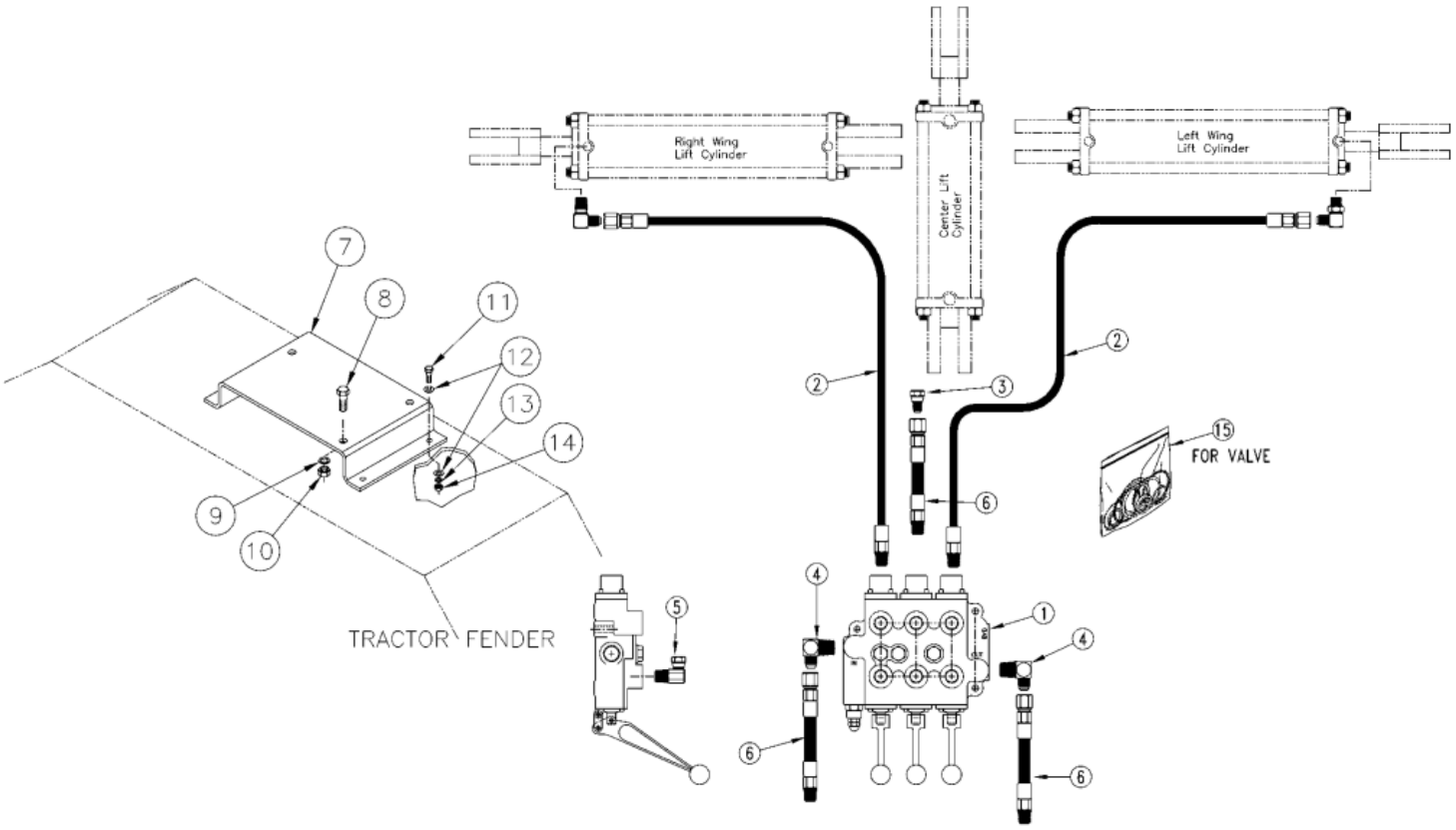

Hydraulic 3-Spool Control Valve Kit

Applies to Models: RCF45180, RCFM45180

Ref.	Part No.	Part Description	Comments
	11196	Drawing Image Number *	
1		3-SPOOL DIRECTION CONTROL VALV	
2	811-358C	HH1/4R1 265 1/2MNPT 9/16FJIC	
3	811-290C	AD 3/4MJIC 1/2FNPT	
4	811-359C	EL 3/4MJIC X 3/4MNPT	
5	811-363C	EL 1/2MNPTS X 1/2 FNPT	
6	811-360C	HH3/8R2 60 1/2MNPT 3/4FJIC	
7	312-546D	CONTROL VALVE MOUNTING BRACKET	
8	802-143C	HHCS 3/8-16X2 GR5	
9	804-013C	WASHER LOCK SPRING 3/8 PLT	
10	803-014C	NUT HEX 3/8-16 PLT	
11	802-005C	HHCS 1/4-20X1 GR5	
12	804-007C	WASHER FLAT 1/4 SAE PLT	
13	804-033C	WASHER LOCK 1/4 SS	
14	803-006C	NUT HEX 1/4-20 PLT	
15	810-402C	CROSS SEAL KIT 2V0010	

Hydraulic Cylinder (810-162C) Cross

Applies to Models: RCF45180, RCFM45180

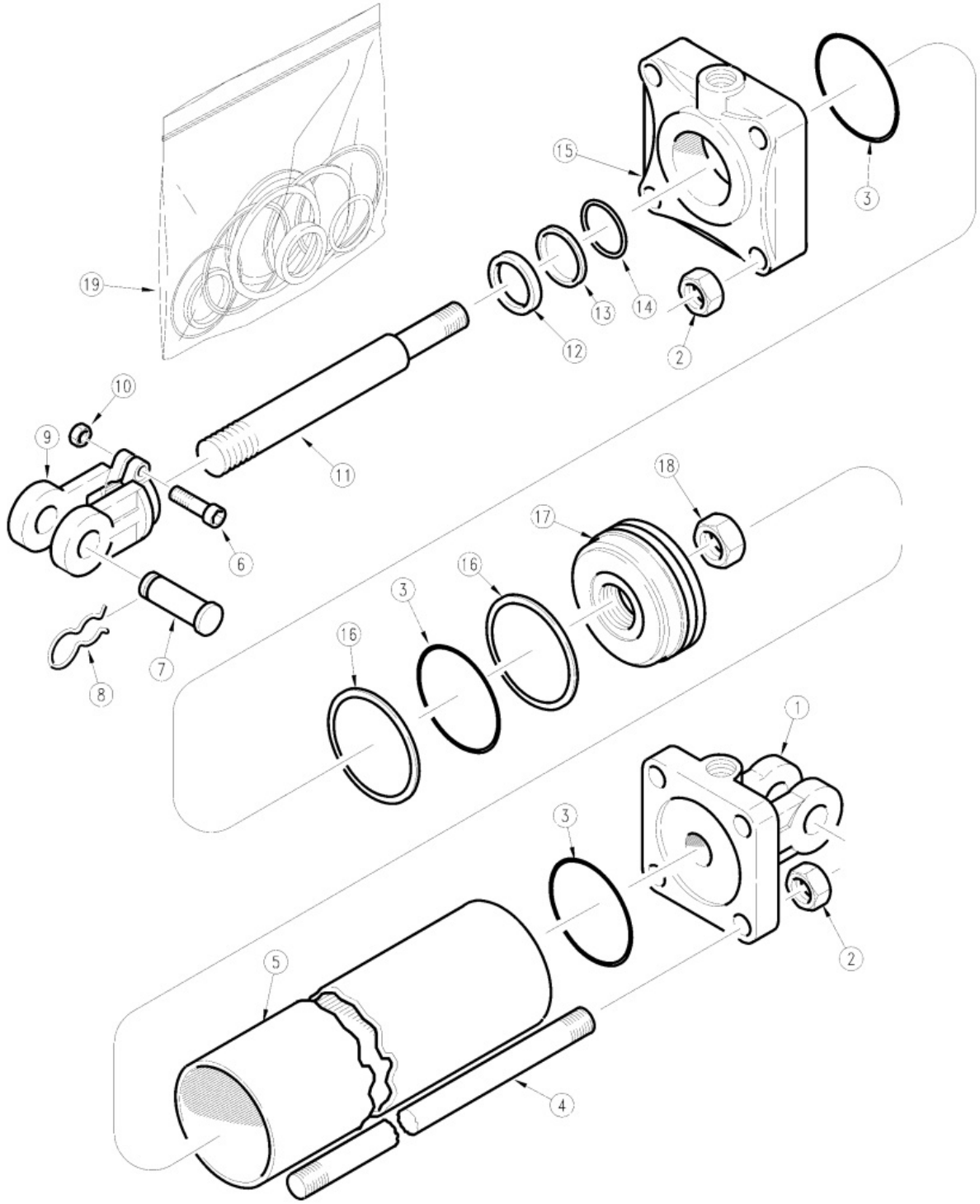

Hydraulic Cylinder (810-162C) Cross

Applies to Models: RCF45180, RCFM45180

Ref.	Part No.	Part Description	Comments
	DWG 11421	Drawing Image Number	
	810-162C	CYL 3.5X8X1.25 ROD (TIE ROD) *	Complete assembly
1	1D1509-4	BASE CROSS	
2	2A0236-9	TIE ROD NUT CROSS	
3	N/A	NOT AVAILABLE	Only available in Seal Kit #19
4	2A0581-1325	TIE ROD CROSS	
5	1D0009-1050	TUBE CROSS	
6	2A0079-616	CROSS SCREW, CAP	
7	1D1551-16275	CROSS CLEVIS PIN 2.75"USABLE	
8	805-032C	PIN HAIR COTTER .148 WIRE	
8	2A0308-1	RPBY 805-032C	Obsolete
9	1D1003-5	CROSS ROD CLEVIS	
10	2A0235-6	CROSS NUT, CLEVIS & TIE ROD	
11	1D0205-1262	ROD CROSS	
12	N/A	NOT AVAILABLE	Only available in Seal Kit #19
13	N/A	NOT AVAILABLE	Only available in Seal Kit #19
14	N/A	NOT AVAILABLE	Only available in Seal Kit #19
15	1D1159-4	HEAD CROSS	
16	N/A	NOT AVAILABLE	Only available in Seal Kit #19
17	1D1401-350	PISTON CROSS	
18	1A1141	PISTON NUT CROSS	
19	810-146C	SEAL KIT CROSS 3.5 CYL 1C4429	

Hydraulic Cylinder (810-150C) Cross

Applies to Models: RCF45180, RCFM45180

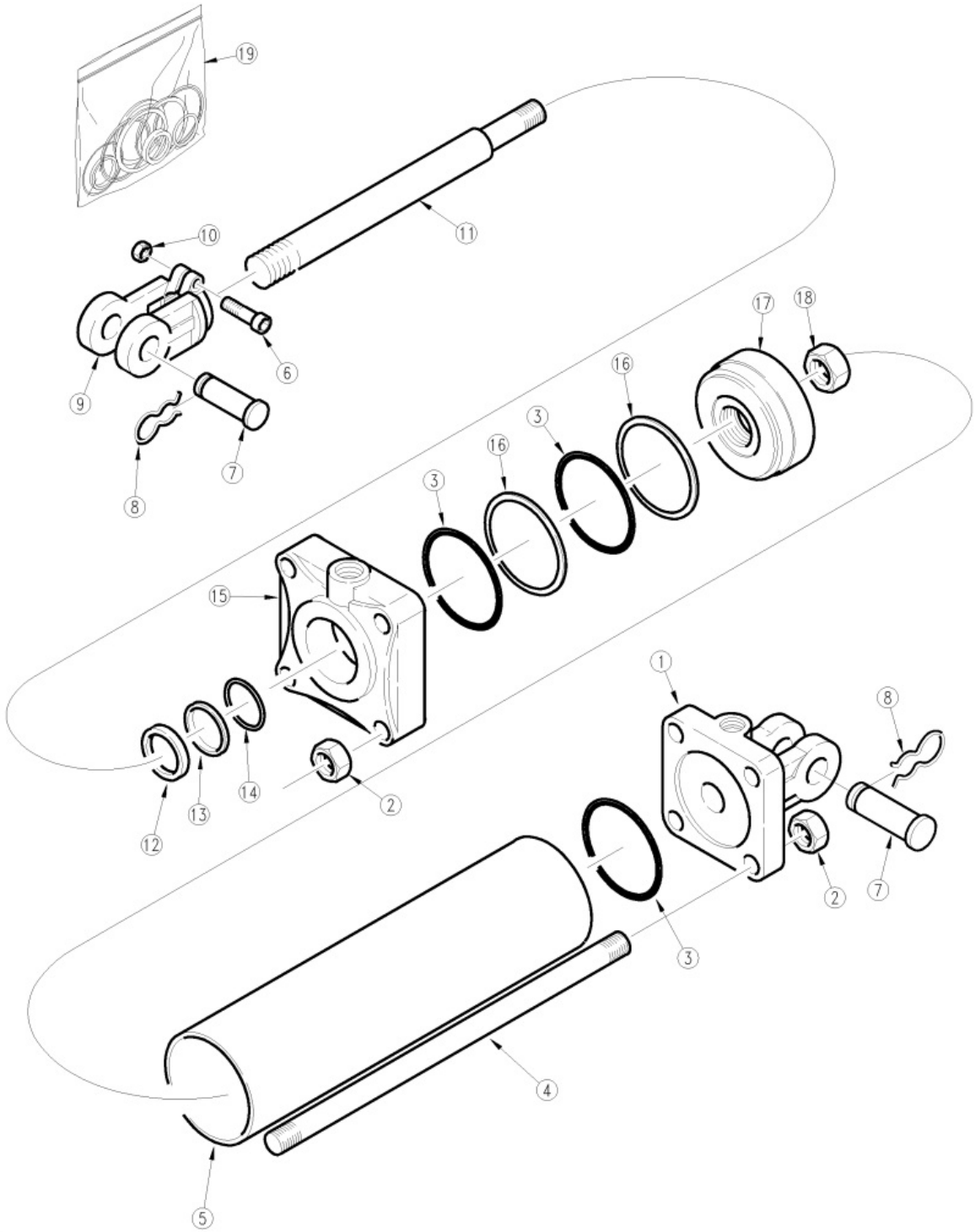

Hydraulic Cylinder (810-150C) Cross

Applies to Models: RCF45180, RCFM45180

Ref.	Part No.	Part Description	Comments
	DWG 78268	Drawing Image Number	
	810-150C	CYL 2.5X12X1.25 ROD (TIE ROD) *	Complete assembly
1	1D1505-3	BASE CROSS	
2	2A0235-6	CROSS NUT, CLEVIS & TIE ROD	
3	N/A	NOT AVAILABLE	Only available in seal kit #19
4	2A0578-1675	TIE ROD CROSS	
5	1D0005-1450	TUBE CROSS	
6	2A0079-616	CROSS SCREW, CAP	
7	1D1551-16275	CROSS CLEVIS PIN 2.75"USABLE	
8	805-032C	PIN HAIR COTTER .148 WIRE	
8	2A0308-1	RPBY 805-032C	Obsolete
9	1D1003-5	CROSS ROD CLEVIS	
10	2A0235-6	CROSS NUT, CLEVIS & TIE ROD	
11	1D0206-1675	ROD CROSS	
12	N/A	NOT AVAILABLE	Only available in seal kit #19
13	N/A	NOT AVAILABLE	Only available in seal kit #19
14	N/A	NOT AVAILABLE	Only available in seal kit #19
15	1D1155-17	HEAD CROSS	
16	N/A	NOT AVAILABLE	Only available in seal kit #19
17	1D1401-250	CROSS PISTON	
18	2A0246-12	CROSS NUT, PISTON	
19	810-178C	SEAL KIT CROSS 2.5 CYL 1C4982	

Hydraulic Cylinder (810-150C) Midway

Applies to Models: RCF45180, RCFM45180

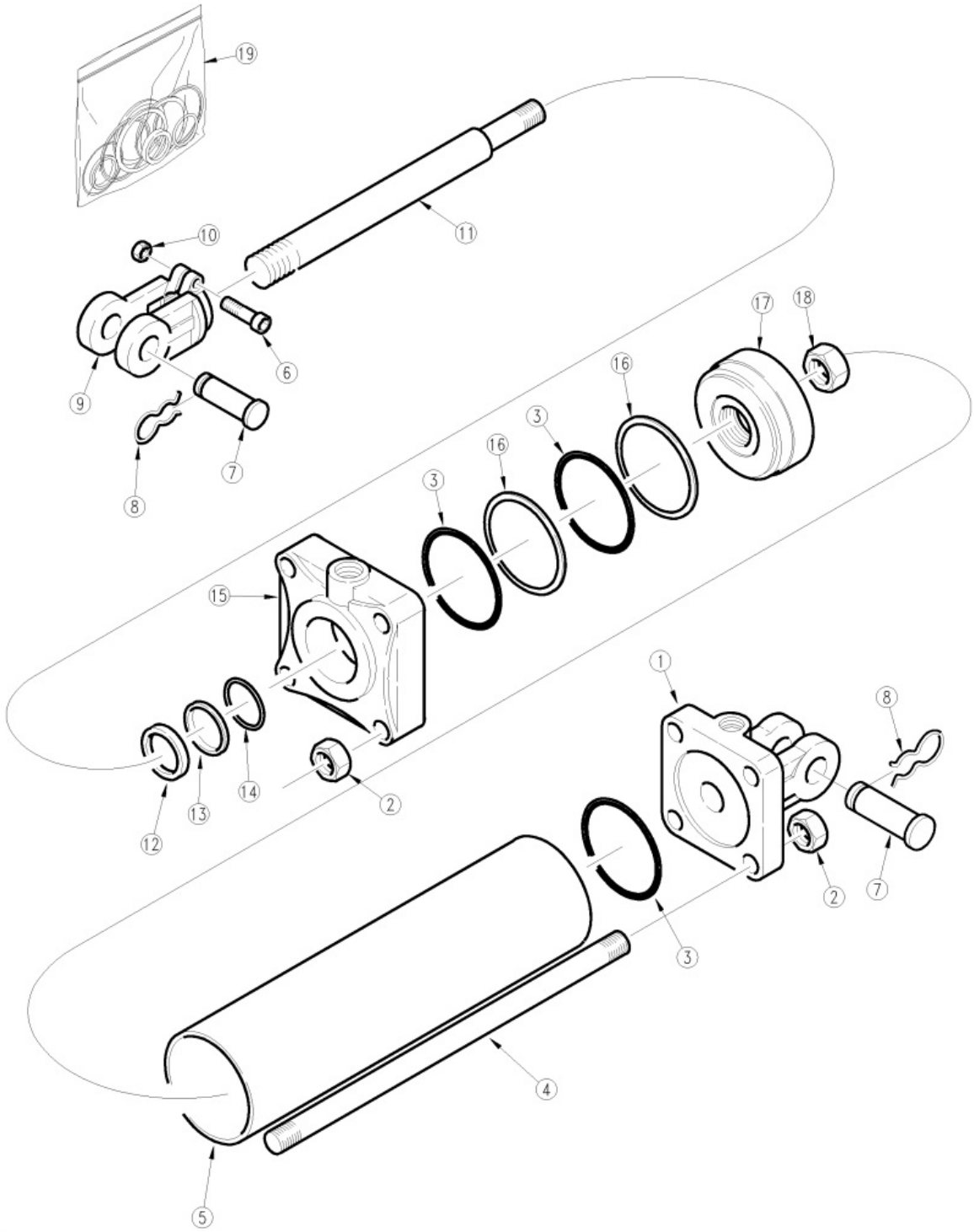

Hydraulic Cylinder (810-150C) Midway

Applies to Models: RCF45180, RCFM45180

Ref.	Part No.	Part Description	Comments
	DWG 78269	Drawing Image Number	
	810-150C	CYL 2.5X12X1.25 ROD (TIE ROD) *	Complete assembly
1	6R0130	MW BASE	
1	6M3118	RPBY 6R0130	Obsolete
2	803-234C	NUT HEX 3/8-16 PLAIN	
2	2A0012	RPBY 803-234C	Obsolete
3	N/A	NOT AVAILABLE	Only available in seal kit #19
4	7M3320	MW TIE ROD	
5	5M3120	MW TUBE	
6	802-023C	HHCS 3/8-16X1 3/4 GR5	
6	2A0006	RPBY 802-023C	Obsolete
7	805-124C	PIN CLVS 1.0X3.69 USBL GR5	
7	2A0208	RPBY 805-124C	Obsolete
8	2A0132	MW PIN CLIP	
9	1M6010-ADI	MIDWAY HARDENED CLEVIS ADI	
9	1M6010	RPBY 1M6010-ADI	Obsolete
10	803-234C	NUT HEX 3/8-16 PLAIN	
10	2A0012	RPBY 803-234C	Obsolete
11	2M3418	MW ROD	
12	N/A	NOT AVAILABLE	Only available in seal kit #19
13	N/A	NOT AVAILABLE	Only available in seal kit #19
14	N/A	NOT AVAILABLE	Only available in seal kit #19
15	3R0406	MW HEAD	
16	N/A	NOT AVAILABLE	Only available in seal kit #19
17	4M3108	MW PISTON	
17	4M3102	RPBY 4M3108	Obsolete
18	803-114C	NUT LOCK 3/4-16 NYLOC COLLAR	
18	2A0022	RPBY 803-114C	Obsolete
19	810-177C	SEAL KIT MW (5A3104) 2.5X1.25R	

Hydraulic Cylinder (810-150C) Red Lion

Applies to Models: RCF45180, RCFM45180

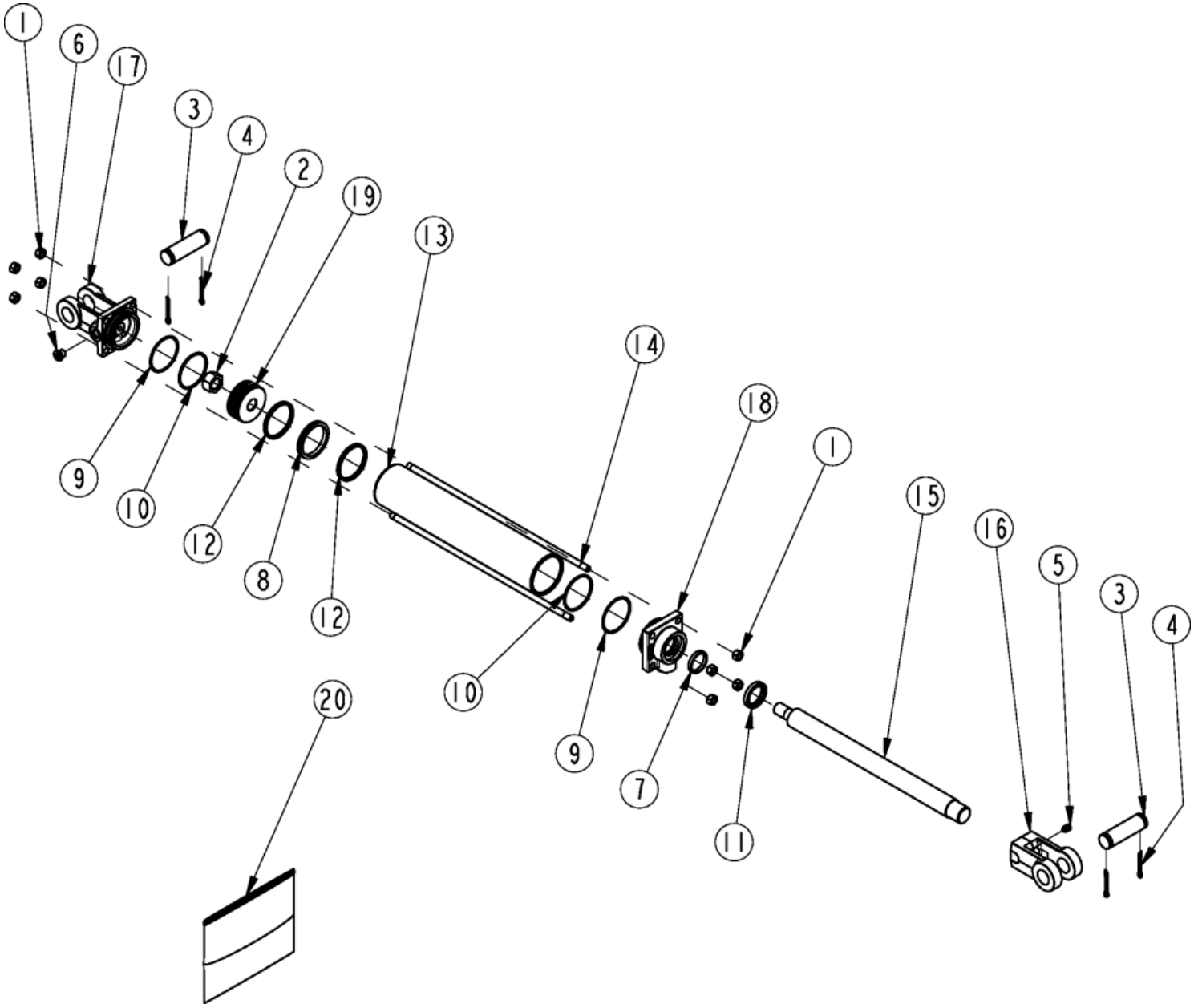

Hydraulic Cylinder (810-150C) Red Lion

Applies to Models: RCF45180, RCFM45180

Ref.	Part No.	Part Description	Comments
	DWG 25899	Image No.	
	810-150C	CYL 2.5X12X1.25 ROD (TIE ROD) *	Complete assembly
1	803-014C	NUT HEX 3/8-16 PLT	
2	130556	MON PISTON NUT	
3	134953	LION PIN	
4	135995	MON CLEVIS PIN COTTER	
5	801-023C	SCREW SET SH 3/8-16X3/8 TYPE C	
6	186561	PLUG 9/16-18UNF MORB SOCKET HD	
7	N/A	NOT AVAILABLE	Only available in Seal Kit #20
8	N/A	NOT AVAILABLE	Only available in Seal Kit #20
9	N/A	NOT AVAILABLE	Only available in Seal Kit #20
10	N/A	NOT AVAILABLE	Only available in Seal Kit #20
11	N/A	NOT AVAILABLE	Only available in Seal Kit #20
12	N/A	NOT AVAILABLE	Only available in Seal Kit #20
13	491672	LION CYL TUBE 2.5 X 12	
14	492222	LION TIE ROD 3/8, 12 CYL	
15	492647	LION ROD 1.25 X 12	
16	492650	LION ROD CLEVIS 1 1/8-12UNF	
17	492688	MON CLEVIS CAP 2.5-9/16ORB-1.0	
18	494286	MON ROD CAP3.5-1.25-3/4ORB-TSS	
19	258818	MON PISTON2.50-.750-TSS-ISO-WR	
20	810-886C	MON SEAL KIT 661701	

Hydraulic Cylinder (810-162C) Midway

Applies to Models: RCF45180, RCFM45180

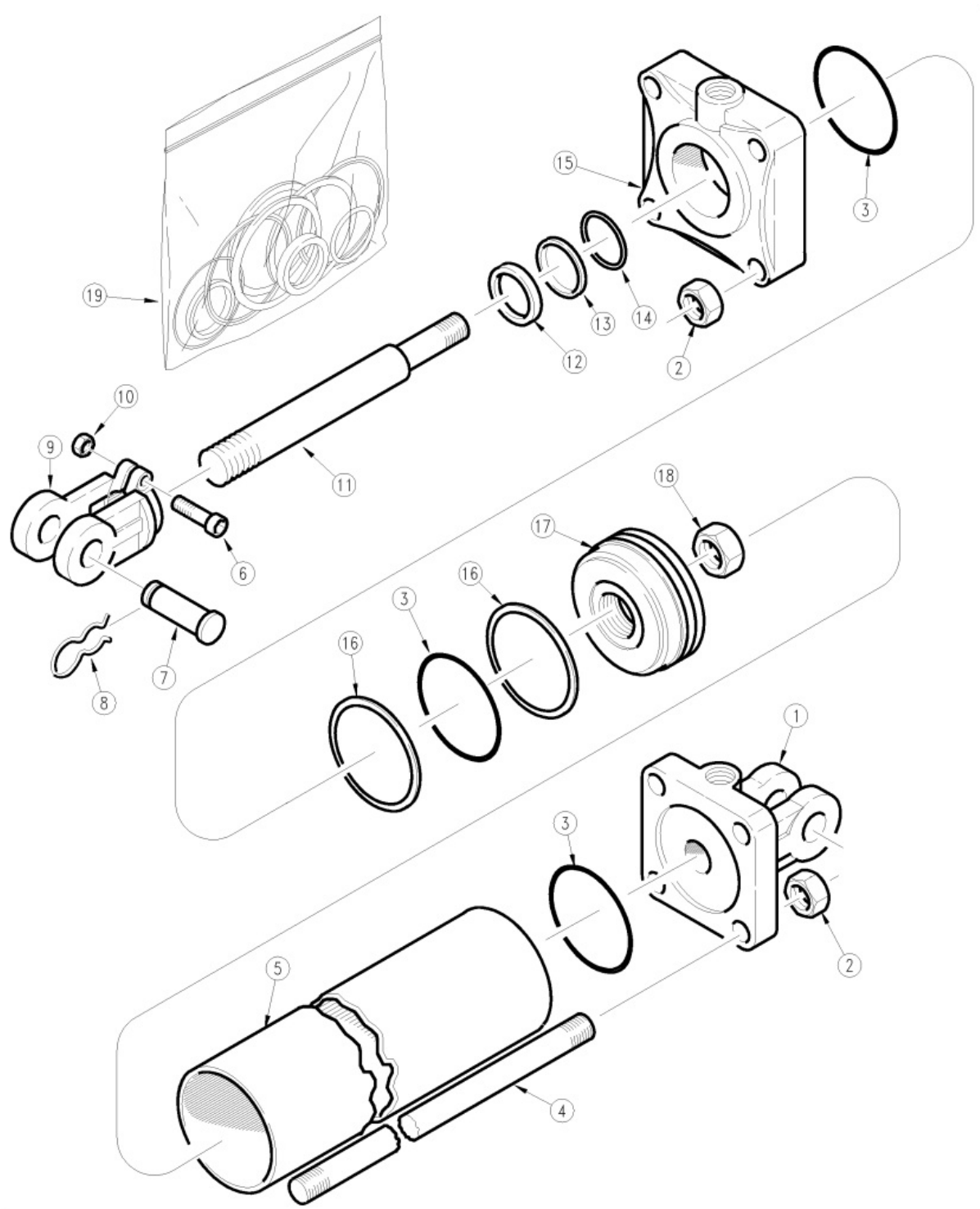

Hydraulic Cylinder (810-162C) Midway

Applies to Models: RCF45180, RCFM45180

Ref.	Part No.	Part Description	Comments
	DWG 78275	Drawing Image Number	
	810-162C	CYL 3.5X8X1.25 ROD (TIE ROD) *	Complete assembly
1	6R3142	3-1/2, PORT D, DP, PIN C	
1	6M5142	RPBY 6R3142	Obsolete
2	2A0016	MW TIE ROD NUT	
3	N/A	NOT AVAILABLE	Only available in Seal Kit #19
4	7M5316	MW TIE ROD	
5	5M5116	MW TUBE 3 1/2 X 8 CYLINDER	
6	802-023C	HHCS 3/8-16X1 3/4 GR5	
6	2A0006	RPBY 802-023C	Obsolete
7	805-124C	PIN CLVS 1.0X3.69 USBL GR5	
7	2A0208	RPBY 805-124C	Obsolete
8	2A0132	MW PIN CLIP	
9	1M6010-ADI	MIDWAY HARDENED CLEVIS ADI	
9	1M6010	RPBY 1M6010-ADI	Obsolete
10	803-234C	NUT HEX 3/8-16 PLAIN	
10	2A0012	RPBY 803-234C	Obsolete
11	2M5416	MIDWAY ROD	
12	N/A	NOT AVAILABLE	Only available in Seal Kit #19
13	N/A	NOT AVAILABLE	Only available in Seal Kit #19
14	N/A	NOT AVAILABLE	Only available in Seal Kit #19
15	3M5408	MW HEAD	
16	N/A	NOT AVAILABLE	Only available in Seal Kit #19
17	4M5108	MW PISTON	Obsolete
17	4M5102	RPBY 4M5108	Obsolete
18	2A0024	MW PISTON NUT 1-14	
19	810-149C	SEAL KIT MW (5A5102) 3.5X1.25R	

Hydraulic Cylinder (810-162C) Red Lion

Applies to Models: RCF45180, RCFM45180

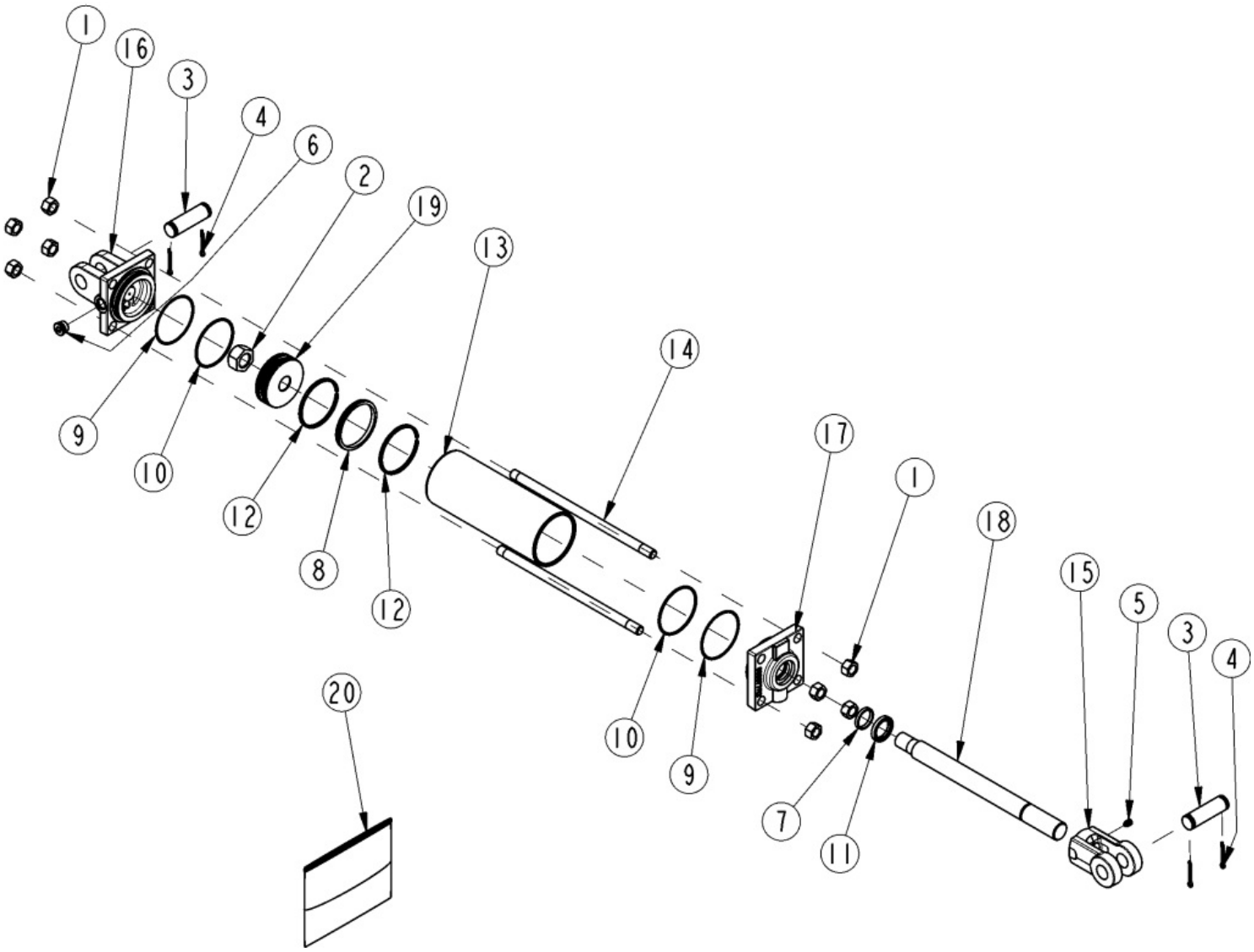

Hydraulic Cylinder (810-162C) Red Lion

Applies to Models: RCF45180, RCFM45180

Ref.	Part No.	Part Description	Comments
	DWG 25900	Drawing Image Number	
	810-162C	CYL 3.5X8X1.25 ROD (TIE ROD) *	Complete assembly
1	803-022C	NUT HEX 5/8-18 PLT	
2	130560	MON PISTON NUT	
3	134953	LION PIN	
4	135995	MON CLEVIS PIN COTTER	
5	801-023C	SCREW SET SH 3/8-16X3/8 TYPE C	
6	186562	LION PLUG 3/4-16UNF SOCKET HD	
7	N/A	NOT AVAILABLE	Only found in Seal Kit #20
8	N/A	NOT AVAILABLE	Only found in Seal Kit #20
9	N/A	NOT AVAILABLE	Only found in Seal Kit #20
10	N/A	NOT AVAILABLE	Only found in Seal Kit #20
11	N/A	NOT AVAILABLE	Only found in Seal Kit #20
12	N/A	NOT AVAILABLE	Only found in Seal Kit #20
13	491798	LION CYL. TUBE 3.5 X 8	
14	492338	LION TIE ROD 5/8 X 8	
15	492652	LION ROD CLEVIS 1 1/4 (1PIN)	
16	492676	LION CLEVIS CAP 3.5 ORB	
17	494286	MON ROD CAP3.5-1.25-3/4ORB-TSS	
18	492700	LION ROD 1.25 DIA. ASAE 8	
19	258827	MON PISTN 3.50-1.00-TSS-ISO-WR	
20	810-888C	MON SEAL KIT 661703	

Hydraulic Plumbing Standard Wing Fold

Applies to Models: RCF45180, RCFM45180

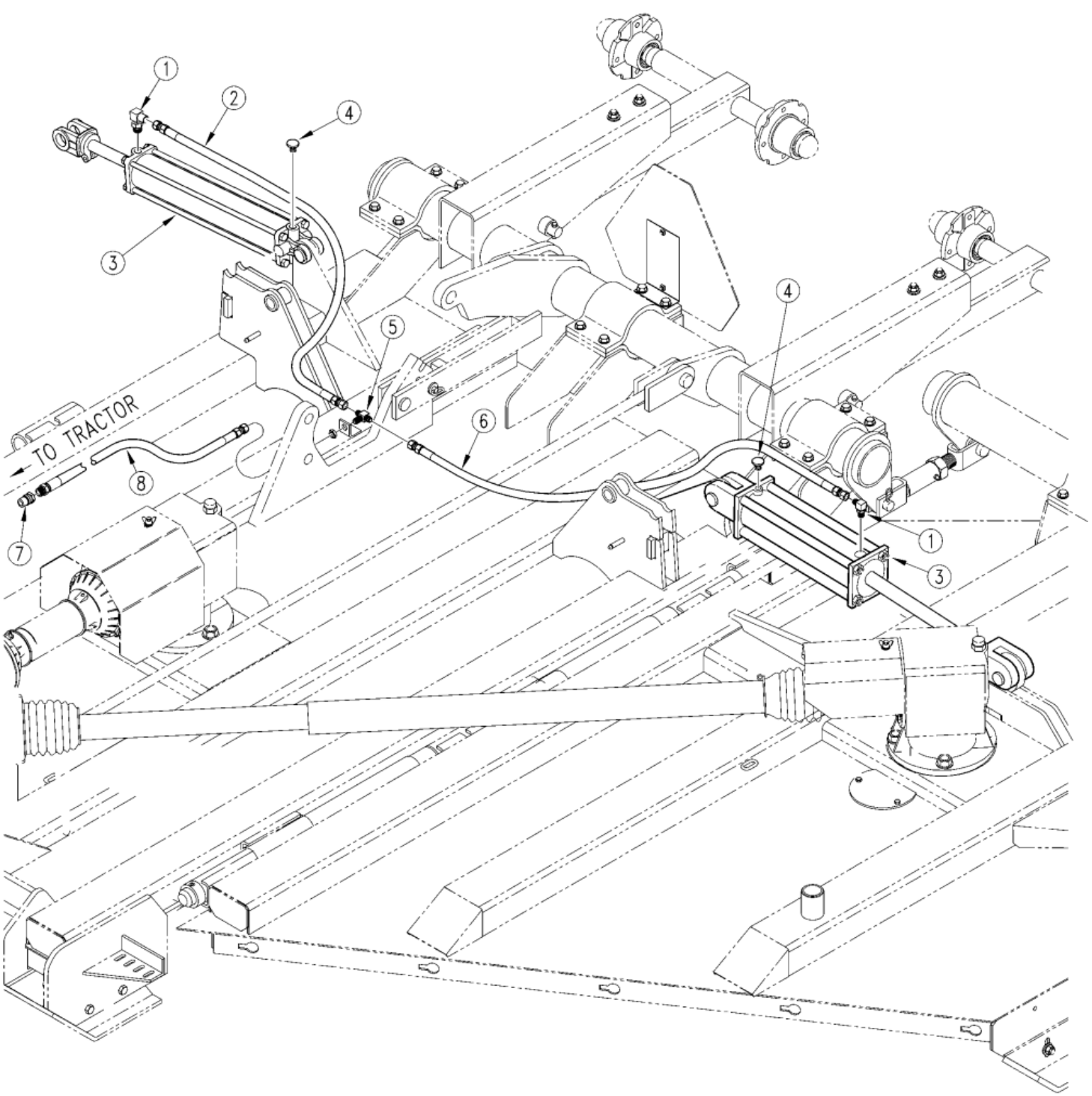

Hydraulic Plumbing Standard Wing Fold

Applies to Models: RCF45180, RCFM45180

Ref.	Part No.	Part Description	Comments
	DWG 14095	Drawing Image Number	
1	811-062C	OREL 1/32 9/16MJIC 9/16MORB	
2	811-056C	HH1/4R2 045 9/16FJIC	
3	810-150C	CYL 2.5X12X1.25 ROD (TIE ROD)	
4	800-117C	VENT PLUG - 9/16-18 PLATED	
5	811-356C	TE 9/16MJIC BH 9/16MJIC 9/16MJ	
6	811-180C	HH1/4R1 057 9/16FJIC	
7	811-394C	CP 3/4FORB MALE QD POPPET TYPE	(S/N 134740+) Revision 2 is not interchangeable w/revision 1
7	811-357C	CA 1/2FNPT	(S/N 134739-) 1st Revision
8	811-361C	HH1/4R1 186 3/4MORB 9/16FJIC	

Hydraulic Selector Control Valve Kit

Applies to Models: RCF45180, RCFM45180

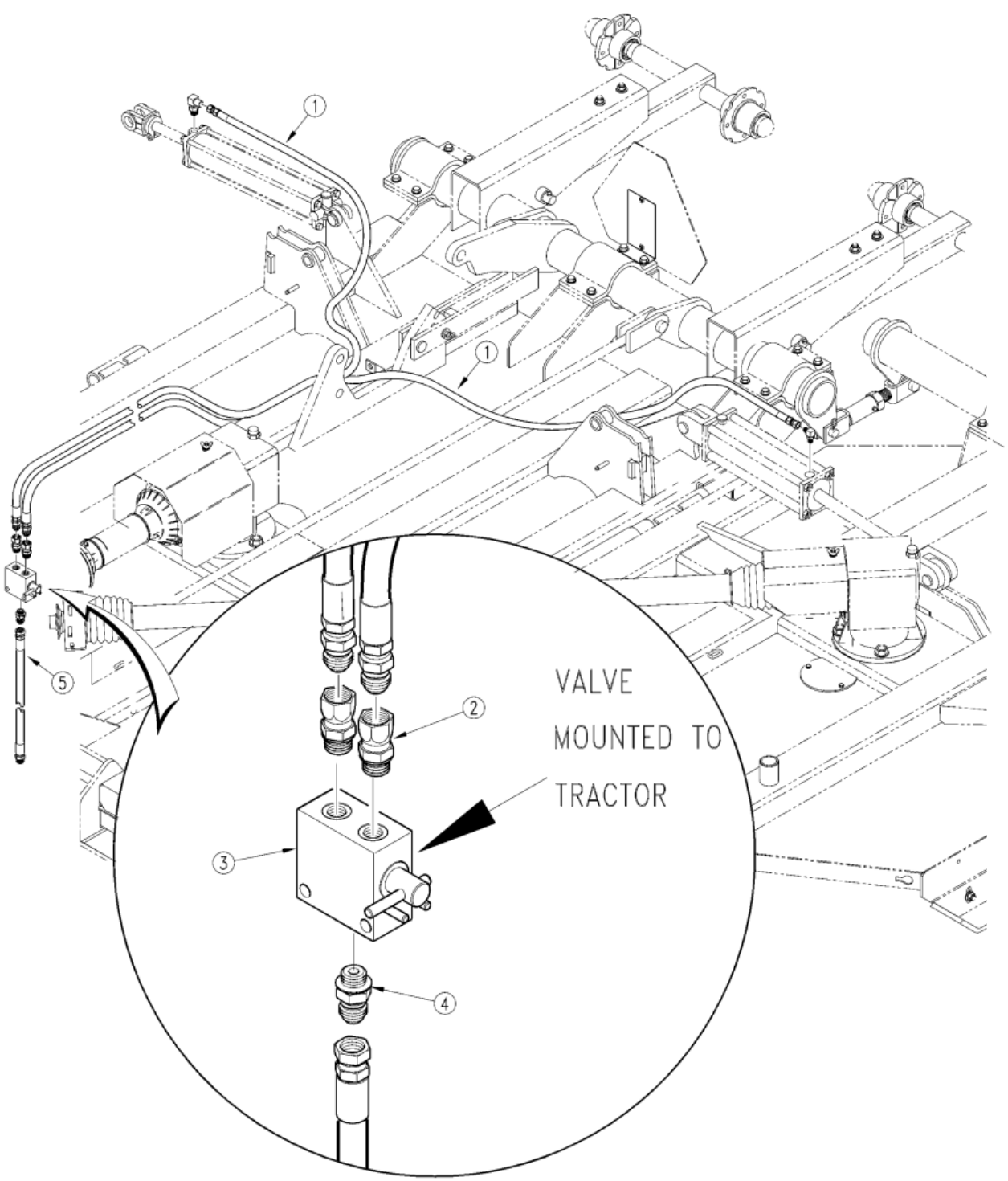

Hydraulic Selector Control Valve Kit

Applies to Models: RCF45180, RCFM45180

Ref.	Part No.	Part Description	Comments
	DWG14097	Drawing Image Number	
	312-316A	2-WAY SELECTOR VLV KIT	
1	811-358C	HH1/4R1 265 1/2MNPT 9/16FJIC	
2	811-021C	AD 1/2FNPTS 3/4MORB	
3	810-152C	SELECTOR VALVE 3-WAY 2 POS	
4	811-088C	AD 3/4MORB 3/4MJIC	
5	811-360C	HH3/8R2 60 1/2MNPT 3/4FJIC	

Hydraulics Optional Lift

Applies to Models: RCF45180, RCFM45180

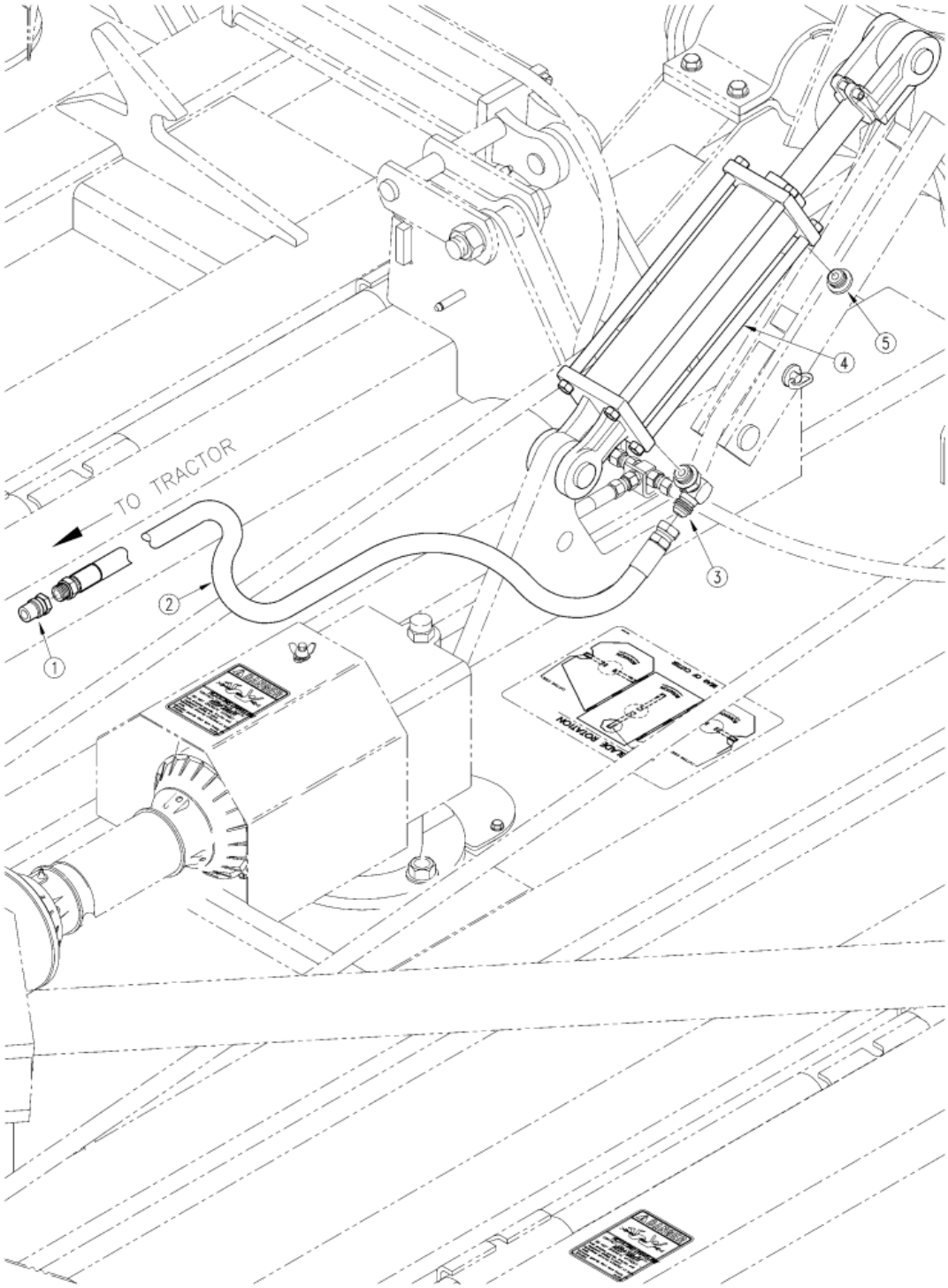

Hydraulics Optional Lift

Applies to Models: RCF45180, RCFM45180

Ref.	Part No.	Part Description	Comments
	DWG 14096	Drawing Image Number	
	312-286A	HYDRAULIC HEIGHT ADJ KIT	
1	811-394C	CP 3/4FORB MALE QD POPPET TYPE	(S/N 134740+)
2	811-353C	HH3/8R1 176 3/4MORB 3/4FJIC	
3	811-063C	EL 3/4MJIC 3/4MORB	
4	810-162C	CYL 3.5X8X1.25 ROD (TIE ROD)	
5	800-094C	FILL PLUG VENTED 3/4-16 PLT	

Decal Placement

Applies to Models: RCF45180, RCFM45180

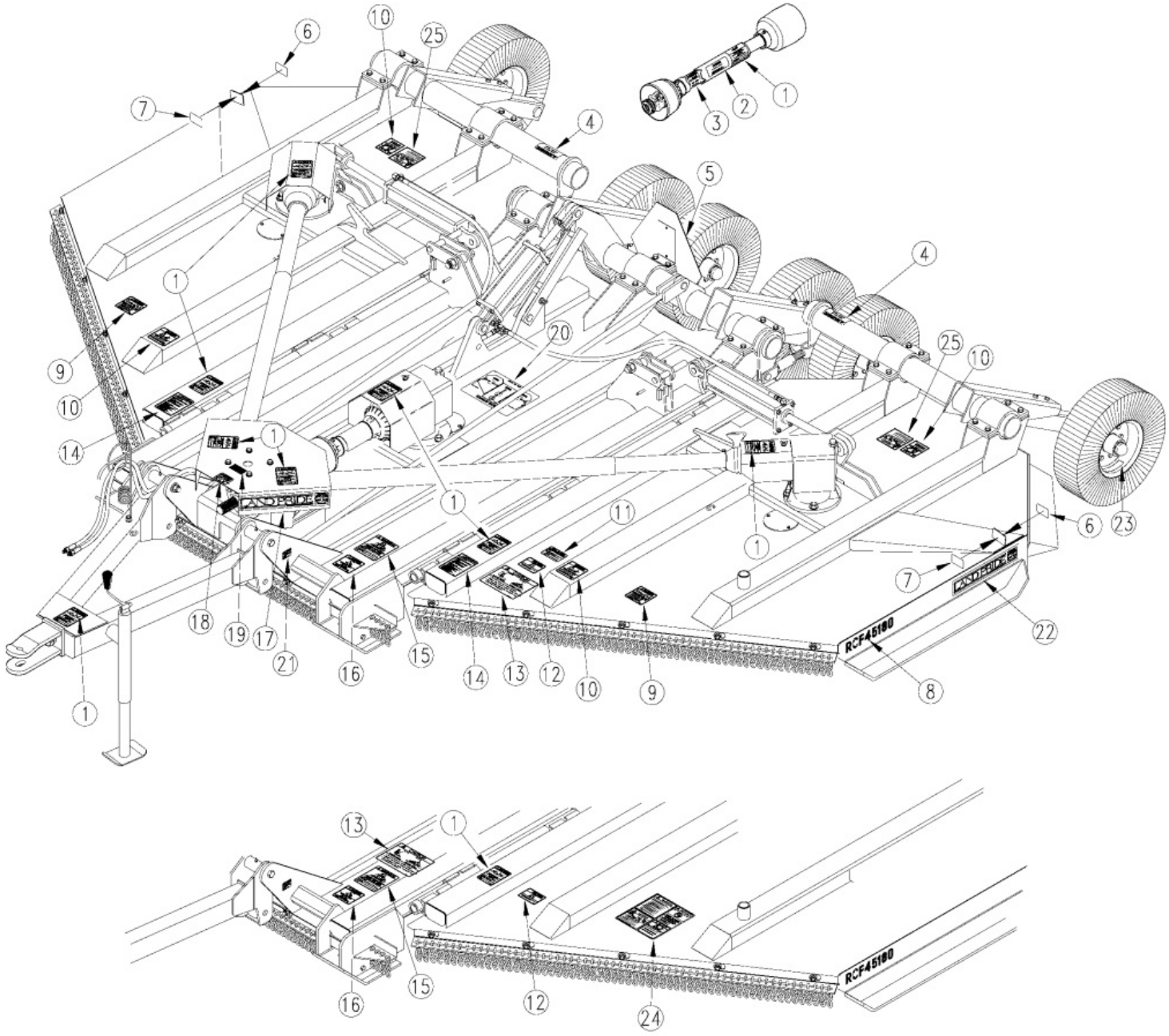

Decal Placement

Applies to Models: RCF45180, RCFM45180

Ref.	Part No.	Part Description	Comments
	DWG 14098	Drawing Image Number	
	312-282A	RCF45180 SAFETY DECAL PACKAGE	
	312-284A	RCFM45180 SAFETY DECAL PACKAGE	
	312-283A	RCF45180 DECAL PACKAGE	
	312-285A	RCFM45180 DECAL PACKAGE	
1	818-552C	DECAL DANGER PTO DRIVELINE	
2	818-321C	DECAL 15' CTR 1000 DRIVELINE	Obsolete
2	818-423C	RPBY N/A	
2	818-426C	DECAL PTO 826-117C 540RPM	
2	818-427C	DECAL DRVLINE 826-118C 1000RPM	
2	818-488C	DECAL PTO MAINTENANCE CV	
3	818-540C	DECAL DANGER GUARD MISS PTO	
4	818-045C	DECAL WARNING PINCH PT/CRUSH	
5	818-055C	DECAL SLOW MOVING-GALV. BACKED	
6	818-230C	DECAL RED REFLECTOR	
7	818-229C	DECAL AMBER REFLECTOR	
8	818-591C	DECAL RCF45180 - LP BLACK	
8	818-592C	DECAL RCFM45180 - LP BLACK	
9	818-555C	DECAL DANGER ROTATE BLADE	
10	818-556C	DECAL DANGER THROWN OBJ CUTTER	
11	818-560C	DECAL NOTICE TO OWNER-NO WARRA	
11	818-559C	RPBY 818-560C	Obsolete
12	818-557C	RPBY 848-512C	
13	818-440C	DECAL CAUTION TRANSPORT LINKS	
14	818-558C	DECAL WARNING GEN SAFE MOWER	
14	818-554C	RPBY 818-558C	Obsolete
15	818-276C	DECAL WARNING OPERATING ANGLE	
16	818-561C	DECAL DANGER RAISED WING HAZAR	
17	818-163C	RPBY 818-902C	
18	818-240C	DECAL WARNING 1000 RPM	
18	818-130C	DECAL WARNING 540 RPM	
19			
20	818-268C	DECAL BLADE ROTATION	
21	819-036C	I.D. PLATE - LAND PRIDE	
22	848-450C	DECAL LP W/TREE 19" BROWN/GOLD	
22	818-895C	RPBY 848-450C	Obsolete
22	818-162C	RPBY 818-895C	Obsolete
23	818-681C	DECAL NOTICE - 20 MPH MAX	
24	818-830C	DECAL SAFETY COMBO SUNWEST	
25	818-555C	DECAL DANGER ROTATE BLADE	
25	818-564C	RPBY 818-555C	Obsolete

Touch-up Paints - LP

Applies to Models: RCF45180, RCFM45180

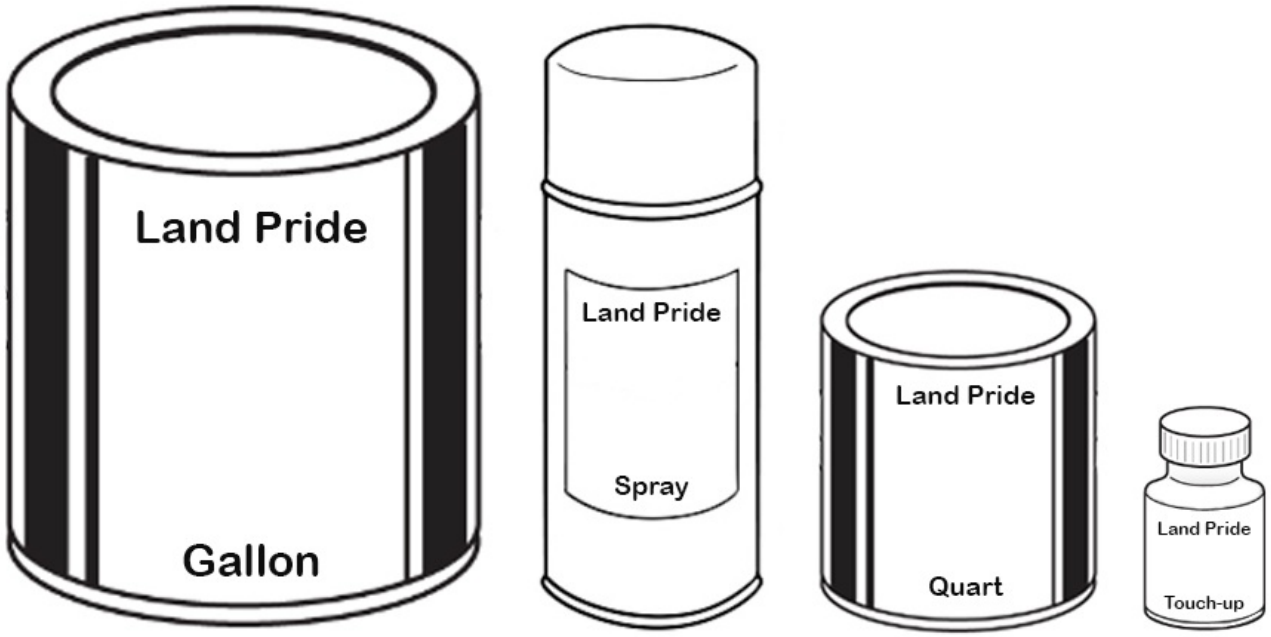

Touch-up Paints - LP

Applies to Models: RCF45180, RCFM45180

Ref.	Part No.	Part Description	Comments
	DWG 76585	Image No.	
	821-011C	PAINT LP BEIGE SPRAY CAN	Beige spray can
	821-070C	PAINT GP GLOSS BLACK SPRAY CAN	Black spray can
	821-054C	PAINT MED. RED SPRAY TRCK/CTR	Red spray can
	821-058C	PAINT GREEN SPRAY CUTTERS	Green spray can
	821-066C	PAINT ORANGE SPRAY CAN	Orange spray can
	821-067C	PAINT BLUE SPRAY CAN	Blue spray can
	821-080C	PAINT ALUMINUM/ZINC SPRAY CAN *	Aluminum/Zinc spray can
	821-011CTU	PAINT LP BEIGE TOUCH-UP 4OZ	Beige touch-up bottle with brush
	821-070CTU	PAINT GLOSS BLACK TOUCH-UP 4OZ	Black touch-up bottle with brush
	821-054CTU	PAINT MED RED TOUCH-UP 4OZ	Red touch-up bottle with brush
	821-058CTU	PAINT GREEN TOUCH-UP 4OZ	Green touch-up bottle with brush
	821-066CTU	PAINT ORANGE TOUCH-UP 4OZ	Orange touch-up bottle with brush
	821-067CTU	PAINT BLUE TOUCH-UP 5OZ	Blue touch-up bottle with brush
	821-080CTU	PAINT ALUMINUM/ZINC TOUCH UP *	Aluminum/Zinc touch-up bottle with brush
	821-011CQT	PAINT LP BEIGE QUART	Beige quart can
	821-070CQT	PAINT GP GLOSS BLACK QUART	Black quart can
	821-054CQT	PAINT MED RED QUART	Red quart can
	821-058CQT	PAINT GREEN QUART	Green quart can
	821-066CQT	PAINT ORANGE QUART	Orange quart can
	821-067CQT	PAINT BLUE QUART	Blue quart can
	821-080CQT	PAINT ALUMINUM/ZINC QUART *	Aluminum/Zinc quart can
	821-011CGL	PAINT LP BEIGE GALLON	Beige gallon can
	821-070CGL	PAINT GP GLOSS BLACK GALLON	Black gallon can
	821-054CGL	PAINT MED RED GALLON	Red gallon can
	821-058CGL	PAINT GREEN GALLON	Green gallon can
	821-066CGL	PAINT ORANGE GALLON	Orange gallon can
	821-067CGL	PAINT BLUE GALLON	Blue gallon can
	821-080CGL	PAINT ALUMINUM/ZINC GALLON	Aluminum/Zinc gallon can

RCF45180 Tire Options

Applies to Models: RCF45180, RCFM45180

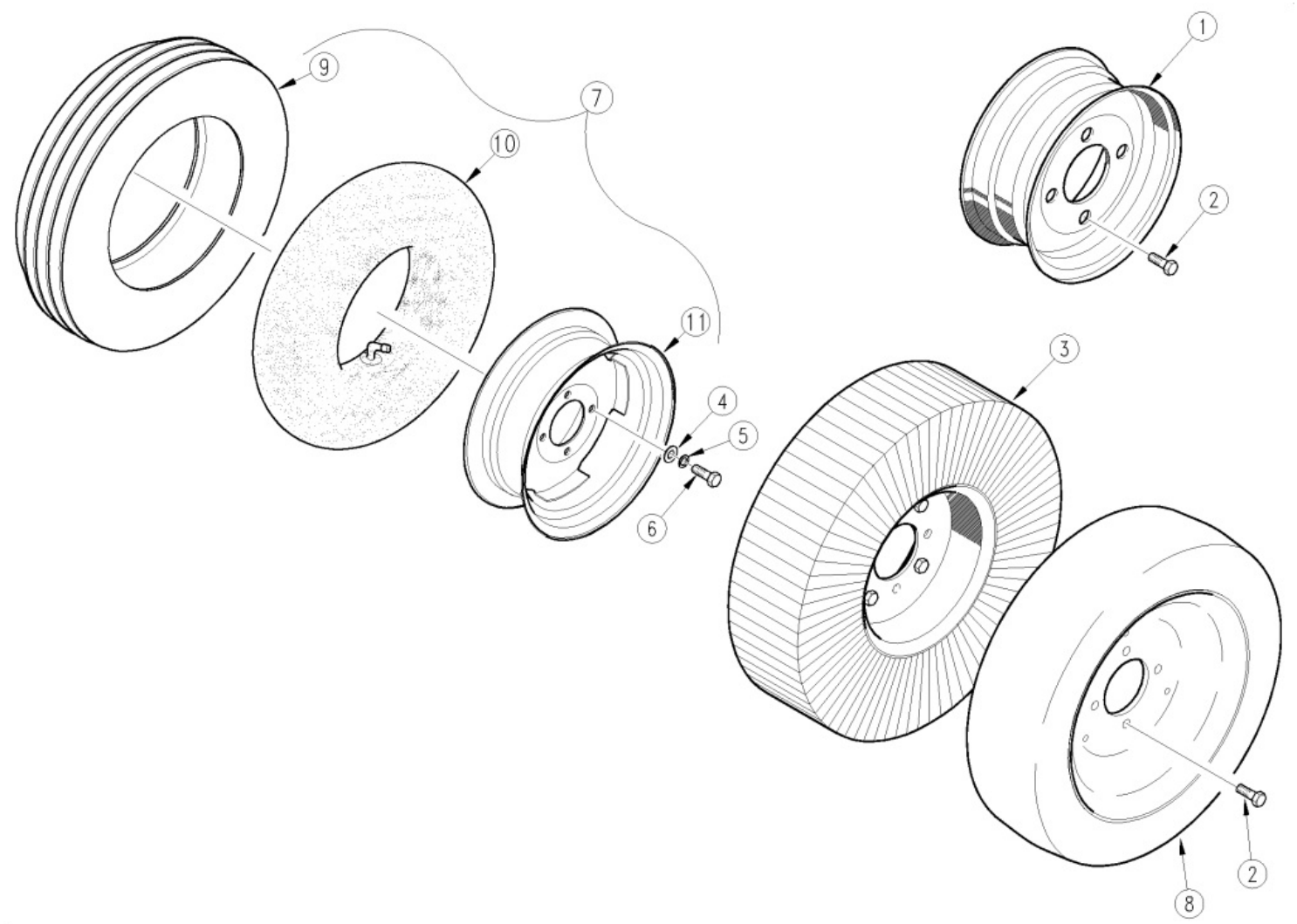

RCF45180 Tire Options

Applies to Models: RCF45180, RCFM45180

Ref.	Part No.	Part Description	Comments
	DWG35902	Drawing Image Number	
1	814-066C	WHEEL 15 X 5 X 4 BOLT	
2	802-104C	BOLT WHEEL 1/2-20X1 90-DEG	
3	814-059C	TIRE & WHEEL LAM. 6X9X21(TALL)	
4	804-016C	WASHER FLAT 1/2 SAE PLT	
5	804-015C	WASHER LOCK SPRING 1/2 PLT	
6	802-240C	HHCS 1/2-20X1 GR5	
7	814-086C	TIRE 25.5 X 8.0-14 - MOUNTED	
8	814-119C	21 SOLID CORE TIRE ASSY 6X9	
9	814-087C	TIRE 25.5 X 8.0-14 (814-086C)	
10	814-088C	TUBE FOR 25.5X8.0-14(814-086C)	
11	814-089C	RIM 2PC.4BLT 14X6BLACK814-086C	

Part Number Index

Part Number	Page
0.121.7101.00	114, 136, 142
0.132.7106.00	114, 142
0.132.7107.00	136
0.139.7100.00	114, 136, 142
0.139.7101.00	114, 136, 142
0.210.0300.00	114, 136, 142
0.210.1300.00	114, 136, 142
0.210.2000.00	114, 136, 142
0.210.3000.00	136
0.210.3001.00	114, 142
0.210.5000.00	136
0.210.5001.00	114, 142
0.210.6000.00	136
0.210.6001.00	114, 142
0.210.7100.00	114
0.252.7525.00	114, 136, 142
0.285.7510.00	136
0.709.7500.00	114, 136, 142
0.712.7500.00	114, 136, 142
010059	108, 112
010063	124, 130
010112	108, 112
010160	108, 110, 112
016239	96
019516	70
019518	70, 106
019519	64, 66, 70, 80, 106
020005	108, 110, 112
020006	108, 112
02-002	116, 118, 132, 134, 140
02-004	116, 118, 132, 134, 140
02-005	122, 128
020061	124, 130
020103	64
020110	124, 130
02-013	120
02-014	120, 126
020162	108, 110, 112, 124, 130
02-017	122, 128
02-032	120, 126
020514	64
02-053	144
020530	66
02-054	144
020617	64, 66, 70, 80, 106
020672	80, 82, 90
020692	96, 100
023469	64
023474	66
030038	108
030039	108
030040	110, 112
030041	110, 112
03-006	118, 132, 134
03-007	118, 132, 134
03-008	116, 140
03-009	116, 140
030191	130
030192	130
030193	124
030194	124
03-020	120
03-021	120
03-022	126
03-023	126
03-038	122
03-039	122
03-040	128
03-041	128
03-060	144
03-061	144
03-15316	56
03-15570	56
04-007	144
040074	124, 130
04-008	144
04-009	144
04-010	144
04-011	114, 116, 118, 120, 122, 126, 128, 132, 134, 136, 140, 142
040112	108, 110, 112
040123	124, 130
040135	108, 110, 112
04-017	116, 118, 120, 126, 132, 134, 140
042446	100
042454	100
042459	100
043487	100
043489	96, 100
044321	64, 66, 70, 74, 80, 82, 90, 106
045560	100
045790	96, 100
045793	96, 100
047825	96, 100
050008	108, 110, 112, 124, 130, 144
050012	108, 110, 112, 124, 130, 144
050013	108, 110, 112, 124, 130, 144
050014	108, 110, 112, 124, 130
050015	108, 110, 112, 124, 130, 144
05-007	116, 118, 120, 122, 126, 128, 132, 134, 140
05-008	116, 118, 132, 134, 140
05-012A	122, 128
05-012B	122, 128
05-014	144
05-020	120, 126
051551	96
051554	100
053356	66, 100
053385	64, 96
060004	108, 110, 112, 144
060005	108, 110, 112, 124, 130
06-002	116, 118, 132, 134, 140
060020	124, 130

Part Number	Page
06-003	116, 118, 120, 122, 126, 128, 132, 134, 140
060051	124, 130
06-017	144
06-018	144
07-001	116, 118, 120, 122, 126, 128, 132, 134, 140
07-002	116, 118, 132, 134, 140
07-004	116, 118, 132, 134, 140
070057	124, 130
070058	124, 130
07-006	116, 118, 132, 134, 140
07-010	144
070140	108, 110, 112, 124, 130
070141	108, 110, 112, 124, 130
070142	108, 110, 112, 124, 130
070143	108, 110, 112
070144	108, 110, 112
070145	108, 110, 112
070151	124, 130
07-022	116, 118, 132, 134, 140
08-001	116, 118, 132, 134, 140, 144
08-002	116, 118, 132, 134, 140, 144
08-003	144
08-006	116, 118, 120, 122, 126, 128, 132, 134, 140, 144
08-007	116, 118, 120, 122, 126, 128, 132, 134, 140, 144
08-008	122, 128, 144
081133	70
087276	64, 66, 70, 74, 80, 82, 90, 106
090003	124, 130
090015	110, 112
09-005	116, 118, 120, 126, 132, 134, 140
090055	108
090073	108, 110, 112
09-008	116, 118, 126, 132, 134, 140
09-011	116, 118, 122, 128, 132, 134, 140
09-012	116, 118, 122, 128, 132, 134, 140
095758	80
097133	74
097136	74
097140	74, 82, 90
100001	138, 146
10-001	116, 122, 128, 140
10-003	116, 118, 132, 134, 140
10-015	120, 126
10-016	116, 118, 132, 134, 140
10-027	144
10160	138, 146
104810	82, 90
110002	138, 146
11001	118, 120, 126, 132, 134
11-003	116, 118, 132, 134, 140
11-008	116, 118, 132, 134, 140, 144
11-012	116, 118, 122, 128, 132, 134, 140
11-14988	56
11-15180	56
11196	148
11-80005	56
120025	124, 130
120050	138, 146
12-008	116, 118, 122, 128, 134, 140
122.580.501.1	84
122.580.510.1	92
122.981.002.1	84
122.981.027.1	92
130002	138, 146
130003	138, 146
130021	124, 130
130030	124, 130
130556	156
130560	160
133836	106
133844	70
134713	80
134953	156, 160
135294	82, 90
135313	90
135995	156, 160
140000	144
140017	108, 110, 112, 124, 130, 138, 146
140033	108, 110, 112, 116, 118, 124, 126, 130, 132, 134, 140
141.028.195.1	84, 92
141.028.248.1	84, 92
141.028.358.1	92
141.028.359.1	84
141.028.472.1	84, 92
1422831412821	92
1422831442821	84
1422871632821	92
1422871642821	84
1522805260710	84
1522805320710	92
158.018.470	84, 92
165.000.589	84, 92
165.000.628	84, 92
165.000.694	84, 92
165.000.785	84, 92
168556	96, 100
17-001	122, 128, 144

Part Number	Page
17-002	116, 118, 120, 122, 126, 128, 132, 134, 140, 144
17-003	116, 118, 120, 122, 126, 128, 132, 134, 140, 144
172758	80
180.014.240	84, 92
180.016.025	84, 92
180.018.004	84, 92
180.018.158	84, 92
180.018.251	84, 92
180.018.252	84, 92
180.018.393	84, 92
180.018.437	84, 92
180.018.567	84, 92
180.028.604	84, 92
18-001	116, 118, 132, 134
18-014	126
18-022	122, 128
18-027	144
186561	156
186562	160
190.000.243	84, 92
19-15135	56
1A1141	150
1D0005-1450	152
1D0009-1050	150
1D0205-1262	150
1D0206-1675	152
1D1003-5	150, 152
1D1155-17	152
1D1159-4	150
1D1401-250	152
1D1401-350	150
1D1505-3	152
1D1509-4	150
1D1551-16275	150, 152
1M6010	154, 158
1M6010-ADI	154, 158
2.210.5001.00	136
2.210.5002.00	114
200-001D	36, 40
200003	108, 110, 112, 124, 130, 138, 146
20-001	116, 118, 120, 126, 132, 134, 140
20-002	116, 118, 132, 134, 140
20005	138, 146
20-009	120, 126
20-018	122, 128
20-019	122, 128
20-025	144
20-026	144
20162	138, 146
204053354	60
204053361	58, 60, 62
204056860	102, 104
204056861	102, 104
204066851	68
204066852	68, 76, 78
204086860	72
204086861	72, 86, 88
210001	138, 146
21-001	120, 126, 144
215066854	76, 78
215066872	76, 78
215086854	86, 88
224210834	76
224210939	68
224270834	78
224380710	88
224701143	102
224701283	102, 104
224730710	86
224730815	72
225160946	68
225690823	72
236530152	58, 62
236530185	60
236630152	58, 62
236630185	60
236630771	76, 78
236630876	68
236631080	102
236631220	104
236640640	86, 88
236640744	72
236830775	76, 78
237005309	68
237005311	104
237005356	76, 78
237005357	102
237005407	86, 88
237005408	72
239006812	68, 72, 86
239006815	88
240002461	68
240003051	58, 62, 104
240080061	72, 76, 78, 86, 88
244111150	102, 104
244160833	76
244690713	86
245160836	78
245690713	86, 88
246000019	94
247000060	98
247000061	98
247006351	94
248230002	98
248230006	98
248230006R02	98
248630001	94
249110242	58, 62
249110330	60
252000001	58, 60, 62, 68, 76, 78, 102, 104
252000005	72, 86, 88
253052101	98
253056301	94
254050007	102
254050029	76, 78
254080029	86, 88
255050005	58, 60, 62, 102, 104
255050006	58, 60, 62, 102, 104
255050009	60, 102
255060005	68, 76, 78
255060006	68, 76, 78
255060351	78
255080005	72, 86, 88
255080006	72, 86, 88
255080351	86, 88
258005320	98
258818	156
258827	160
259006802	76

Part Number	Page
259006803	78
259006804	104
26-15120	56
26-16033	56
264630001	94
270060833	76
270080713	86
270111290	102, 104
270161290	102, 104
270690713	86
2A0006	154, 158
2A0012	154, 158
2A0016	158
2A0022	154
2A0024	158
2A0079-616	150, 152
2A0132	154, 158
2A0208	154, 158
2A0235-6	150, 152
2A0236-9	150
2A0246-12	152
2A0308-1	150, 152
2A0578-1675	152
2A0581-1325	150
2M3418	154
2M5416	158
30038	146
30039	146
30040	138
30041	138
303003400	94
304011	74, 82, 90
304046	74, 82, 90
304149	96, 100
310-024D	8, 10, 12, 14
312-070D	46, 48
312-071D	42, 44
312-098D	8
312-139D	38, 40
312-155H	30
312-194E	32, 34
312-195H	30
312-205H	8, 10, 12, 14
312-206H	20, 22, 24, 26
312-207H	20, 22, 24, 26
312209	74, 82, 90
312-210D	30
312-210H	36, 38
312-212D	36, 40
312-212H	36
312-213H	40
312-214H	40
312-216H	40
312-217H	18
312-218H	8, 10, 12, 14
312-220H	4
312-221H	30, 32, 34
312-222H	30, 32, 34
312-223H	28
312-224H	28
312-225V	28
312-226H	20, 22, 24
312-227H	18
312-228H	18
312-239D	20, 22
312-252V	36
312-253V	40
312-258K	42, 44
312-259K	46, 48
312-260K	46, 48
312-261K	44
312-262K	48
312-263K	48
312-264K	44
312-265K	50
312-266K	50
312-267K	50
312-268K	50
312-269K	50
312-277S	38, 40
312-278S	28
312-281S	32, 34
312-282A	168
312-283A	168
312-284A	168
312-285A	168
312-286A	166
312-302M	30, 32, 34
312-308H	4
312-313D	40
312-316A	164
312-317H	46
312-318H	46
312-319H	46
312-320H	46
312-323K	44
312-324K	48
312-325K	48
312-326K	44
312-327K	50
312-328K	50
312-329K	50
312-330K	50
312-331K	50
312-332H	32, 34
312-334H	10, 12, 22, 24
312-345H	36
312-346V	36
312-356H	18
312-372H	12, 14
312-399H	14, 26
312-400H	14, 26
312410	64, 66, 70, 80, 106
312-432D	28
312-433H	6
312-434H	6
312-442D	46, 48
312-443D	46, 48
312-444D	42, 44
312-445D	38, 40
312-446D	28
312-446H	26
312-447D	28
312-447H	50
312-448D	4
312-448H	50
312-449D	4
312-449H	50
312-450D	4
312-450H	50
312-451D	4
312-454D	36
312-455D	20
312-456D	38
312-457D	30, 32, 34
312-458D	8, 20
312-459D	8, 10, 12, 14, 20, 22, 24, 26
312-460D	42, 44
312-461D	46, 50
312-462D	46, 50
312-463D	46, 50

Part Number	Page
312-464D	46, 50
312-465D	46, 50
312-466D	42
312-467D	42
312-468D	46
312-469D	46
312-470D	46
312-471D	46
312-474D	46
312-475D	42, 44
312-476D	46, 50
312-477D	46, 48
312-478D	46, 50
312-479D	46, 50
312-480D	46, 50
312-481D	42, 44
312-500D	8, 10
312-509D	8, 10, 12, 14
312-512D	42
312-513D	42, 44
312-514D	46
312-515D	46
312-516D	46
312-517D	46
312-520D	46
312-522D	42, 44
312-523D	42, 44
312-524D	46, 48
312-526D	46, 50
312-528D	46, 50
312-529D	46, 50
312-530D	46, 50
312-540D	10, 12, 22, 24
312-544D	8, 10, 12, 14
312-546D	148
312-547D	38, 40
312-563D	94
312-566D	22, 24, 26
312-587D	38
312-633D	14, 26
312-742D	44
312-743D	44
312-744D	48
312-745D	48
312-746D	50
312-747D	50
312-750D	50
312-751D	44
312-753D	48
312-754D	48
312-755D	50
312-756D	50
312-759D	50
315892	106
320428	80
320527	100
321256	74
325027	74, 82, 90
331053	70, 80
331573	82, 90
333919	100, 106
338020000	58, 60, 62, 68, 76, 78, 102, 104
338023000	72, 86
338023001	88
338531	96, 100
339107	70, 74
341002000	102, 104
341042000	68, 78
341043000	68, 76, 78, 102
341053000	104
341054000	72
341055000	72, 86, 88
341586	80
341953	96, 100
342221	80
345012000	58, 60, 62
34800400	86
348004000	58, 60, 62, 68, 72, 76, 78, 88, 102, 104
348005000	58, 60, 62
348017000	78, 88
351022370	98
355155	70, 74, 80, 82, 90, 106
355527	90
359471	70
363617	90
363696	82
364915	82, 90
365305	64, 66, 70, 74, 80, 82, 90, 106
365722	80
365725	82, 90
367002630	94
377336	64, 66, 70, 106
377341	70, 80
377436	64, 66, 106
377437	74
377442	74, 82, 90
380371	70, 74, 80, 82, 90, 106
380883	80
380907	106
381367	82
381495	96, 100
381908	80, 106
381957	96, 100
382329	64, 66
382437	80
382647	80
383052	106
383878	80
383879	80
384064	70
384202	106
384316	82, 90
384348	106
385911	70
386048	82, 90
386083	80
386345	90
386427	64, 66
386428	64, 66
387097	82
388141	90
388204	82
388695	66
388698	90
388957	74
389548	80
389849	70
389850	74
389851	80
389856	64
390257	74
390404	80, 106
391406	82
394526	90

Part Number	Page
399141000	58, 60, 62, 68, 72, 76, 78, 86, 88, 102, 104
399143000	58, 60, 62, 68, 72, 76, 78, 86, 88, 102, 104
3M5408	158
3R0406	154
40112	138, 146
40135	138, 146
403000001	58, 60, 62, 68, 72, 86, 88, 102, 104
403000013	76, 78
408000029	98
408000033	94
408000041	68, 72, 76, 78, 86, 88
408000060	98
412040006	104
41205	58, 62, 102, 104
412050006	58, 60, 62, 102
41206	68, 76, 78
412060012	68, 76, 78
41208	72, 86, 88
412080012	86, 88
432000006	98
435000302R	76, 78
491672	156
491798	160
492222	156
492338	160
492647	156
492650	156
492652	160
492676	160
492688	156
492700	160
494286	156, 160
4M3102	154
4M3108	154
4M5102	158
4M5108	158
50008	138, 146
50012	138, 146
50013	138, 146
50014	138, 146
50015	138, 146
509063854	68, 76, 78
509083855	72, 86, 88
510050351	60, 102
511060051	76, 78
511080051	86, 88
515210311	98
515630301	94
517050004	68
517050008	60, 102
517050009	68, 76, 78
517050030	68
517050091	60, 102
517050098	58, 62, 104
517050099	58, 62, 104
517068051	76, 78
517080080	72, 86, 88
517080082	72
517088051	86, 88
55051-1817	56
569B50254	58, 62
572050351	58, 62, 104
572080351	72
5720H3776	68
573063775	76, 78
573063781	76, 78
573080375	86, 88
573080399	86, 88
5M3120	154
5M5116	158
60004	138, 146
60005	138, 146
638237001	62, 98
638248001	58, 98
638248006	98, 104
663G48403R	60, 94, 102
676548303	60, 94, 102
68810-1004	56
695581	80
6M3118	154
6M5142	158
6R0130	154
6R3142	158
70140	138, 146
70141	138, 146
70142	138, 146
70143	138, 146
70144	138, 146
70145	138, 146
702352	74, 82, 90
7M3320	154
7M5316	158
8.0.9.00143	114, 136, 142
8.0.9.00469	136
8.1.1.00501	114, 136, 142
8.2.2.00555	114, 136, 142
8.4.7.00146	114, 136, 142
8.4.7.02265	114, 136, 142
8.5.1.00533	114, 136, 142
8.5.2.00332	114, 136, 142
8.6.6.00201	114, 136, 142
8.6.7.00269	108, 110, 112, 116, 118, 124, 126, 130, 132, 134, 140
8.7.1.01107	114, 136, 142
8.7.1.02348	114, 136, 142
8.7.3.00331	114, 136, 142
800-001C	8, 20, 28, 30, 36, 38, 40
800-058C	36
800-080C	8, 10, 12, 14, 20, 22, 24, 26, 28, 30, 32, 34, 38, 40
800-094C	38, 166
800-117C	28, 162
800-136C	36, 40
801-018C	38
801-023C	156, 160
802-004C	8, 20
802-005C	148

Part Number	Page
802-007C	8, 10, 12, 14, 20, 22, 24, 26
802-014C	30, 32, 34
802-017C	8, 10, 12, 14, 22, 24, 26
802-023C	154, 158
802-047C	40
802-050C	8, 10, 12, 14
802-051C	8
802-066C	8, 10, 12, 14, 20, 22, 24, 26
802-074C	30
802-076C	30, 32, 34
802-079C	42, 44, 46, 48, 108, 110, 112, 124, 130, 138, 146
802-091C	8, 10, 12, 14, 108, 110, 112
802-092C	38
802-104C	172
802-115C	36, 40
802-128C	38, 40
802-143C	148
802-154C	36
802-159C	14, 26
802-181C	20, 22
802-205C	30
802-214C	20, 22, 24, 26, 42, 44, 46, 48, 50
802-235C	12, 14, 32, 34
802-240C	172
802-269C	36
802-277C	6
802-341C	4
802-342C	18
802-349C	4
802-361C	34
802-374C	4
802-379C	36, 40
803-005C	38
803-006C	8, 18, 20, 148
803-008C	26, 38
803-011C	36, 40
803-014C	8, 148, 156
803-020C	8, 10, 12, 14, 20, 22, 24, 38, 40, 42, 44, 46, 48, 50
803-022C	160
803-029C	36, 40
803-038C	12, 14, 20, 22, 30, 32, 34
803-049C	30, 32, 34
803-078C	42, 44, 46, 48
803-079C	112
803-081C	32, 34
803-095C	8, 10, 12, 14, 20, 22, 24, 26, 108, 110
803-114C	154
803-147C	36, 40
803-169C	20, 22, 24, 26, 38, 40
803-170C	6
803-200C	36, 40
803-231C	14, 26
803-234C	154, 158
803-299C	8, 10, 12, 14, 20, 22, 24, 26
803-308C	36, 40
804-006C	8, 38
804-007C	8, 20, 148
804-009C	8, 10, 12, 14, 20, 22, 24, 26, 38
804-010C	20, 22, 24, 26
804-012C	8, 14, 26, 30, 32, 34, 42, 44, 46, 48
804-013C	8, 10, 12, 14, 22, 24, 26, 30, 32, 34, 108, 110, 112, 124, 130, 148
804-015C	4, 8, 10, 12, 14, 20, 22, 24, 38, 40, 42, 44, 46, 48, 50, 108, 110, 112, 172
804-016C	8, 10, 12, 14, 20, 22, 24, 36, 38, 40, 42, 44, 46, 48, 50, 172
804-022C	8, 10, 12, 14
804-028C	30, 32, 34
804-029C	18, 30, 32, 34
804-033C	148
804-036C	14
804-039C	32, 34
804-049C	18
804-055C	36, 40
804-067C	6
804-070C	8, 10, 12, 16, 20, 22, 24, 26, 108, 110, 112
804-158C	116, 118, 120, 122, 126, 128, 132, 134, 140, 144
804-159C	66
805-002C	18
805-004C	18
805-010C	10, 12, 22, 24
805-016C	8, 20, 36, 40
805-017C	8, 10, 12, 14, 20, 22, 24, 26, 108, 110, 112, 116, 118, 132, 134, 140, 144
805-032C	18, 150, 152
805-063C	42, 46
805-067C	12, 24
805-069C	10, 22
805-104C	18, 20, 22, 24, 26, 28, 38

Part Number	Page
805-124C	154, 158
805-125C	28
805-131C	18
805-136C	8, 10, 12, 14, 42, 44, 46, 48, 50
805-137C	28
805-145C	20, 22, 24, 26, 38
805-164C	28
806-072C	20, 22
807-006C	36
807-023C	30, 32, 34
807-026C	12, 14, 18
810-146C	150
810-149C	158
810-150C	28, 152, 154, 156, 162
810-152C	164
810-162C	38, 150, 158, 160, 166
810-177C	154
810-178C	152
810-402C	148
810-886C	156
810-888C	160
811-021C	164
811-056C	28, 162
811-062C	28, 162
811-063C	38, 166
811-088C	164
811-180C	28, 162
811-290C	148
811-353C	38, 166
811-356C	28, 162
811-357C	162
811-358C	148, 164
811-359C	148
811-360C	148, 164
811-361C	28, 162
811-363C	148
811-394C	28, 162, 166
812-129C	30
814-059C	172
814-066C	172
814-086C	172
814-087C	172
814-088C	172
814-089C	172
814-119C	172
815-230C	36, 40
816-098C	36, 40
816-121C	42, 44
816-122C	46, 48
816-123C	18
816-124C	28
818-045C	168
818-055C	38, 168
818-130C	168
818-162C	168
818-163C	168
818-229C	168
818-230C	168
818-240C	168
818-268C	168
818-276C	168
818-321C	168
818-423C	168
818-426C	168
818-427C	168
818-440C	168
818-488C	168
818-540C	64, 66, 70, 74, 80, 82, 90, 106, 168
818-552C	64, 66, 70, 74, 80, 82, 90, 106, 168
818-554C	168
818-555C	168
818-556C	168
818-557C	168
818-558C	168
818-559C	168
818-560C	168
818-561C	168
818-564C	168
818-591C	168
818-592C	168
818-681C	168
818-830C	168
818-895C	168
819-036C	168
820-090C	4
820-091C	4
820-092C	4
820-112C	6
820-137C	6
820-193C	6
820-209C	6
821-011C	170
821-011CGL	170
821-011CQT	170
821-011CTU	170
821-054C	170
821-054CGL	170
821-054CQT	170
821-054CTU	170
821-058C	170
821-058CGL	170
821-058CQT	170
821-058CTU	170
821-066C	170
821-066CGL	170
821-066CQT	170
821-066CTU	170
821-067C	170
821-067CGL	170
821-067CQT	170
821-067CTU	170
821-070C	170
821-070CGL	170
821-070CQT	170
821-070CTU	170
821-080C	170
821-080CGL	170
821-080CQT	170
821-080CTU	170
822-091C	36, 40
822-092C	36, 40
822-214C	114, 116, 118, 120, 122, 126, 128, 132, 134, 136, 140, 142
826-035C	8, 10, 12, 14, 20, 22, 24, 26, 108
826-038C	20, 22, 24, 26, 110
826-060C	8, 10, 12, 14, 112
826-068C	8, 10, 12, 14, 126, 128
826-069C	8, 10, 12, 14, 20, 22, 24, 26, 116

Part Number	Page
826-070C	20, 22, 24, 26, 140
826-072C	8, 10, 12, 14, 120, 122
826-073C	20, 22, 24, 26, 132
826-074C	8, 10, 12, 14, 118
826-075C	20, 22, 24, 26, 134
826-076C	54, 86
826-077C	52, 76
826-078C	52, 54, 60
826-079C	52, 54, 102
826-083C	54, 72
826-084C	52, 68
826-094C	54, 58
826-095C	52, 62
826-096C	52, 54, 104
826-098C	54, 88
826-099C	52, 78
826-112C	54, 74
826-113C	52, 70
826-114C	54, 66
826-115C	52, 64
826-116C	52, 54, 106
826-117C	54, 90
826-118C	52, 80
826-222C	14, 26
826-241C	20, 22, 24, 26, 142, 144, 146
826-242C	8, 10, 12, 14, 130
826-244C	52, 82
826-253C	8, 10, 12, 14, 124
826-254C	20, 22, 24, 26, 136, 138
826-376C	8, 10, 12, 14, 20, 22, 24, 26, 114
826-377C	20, 22, 24, 26
826-476C	54, 92
826-477C	52, 84
826-490C	114, 136, 142
826-497C	108, 110, 112, 120, 138, 146
826-587C	74
826-588C	90
826-591C	80
826-592C	82
826-643C	54, 56
826-644C	52
826-648C	14, 26
848-450C	168
890-005C	18, 36
890-143C	36
890-153C	38
890-175C	8, 10, 12, 42, 46, 48
890-177C	38
890-182C	30, 32, 34
890-196C	30, 32
890-220C	4
890-231C	4
890-246C	32, 34
890-400C	12, 14, 44, 50
90015	138
90055	146
90073	138, 146
90-24406	56
92-24406	56
93-24406	56
96-24406	56
97-24406	56
98-24406	56
99-24406	56
A.709.500	114, 136, 142
A.712.500	114, 136, 142
DWG 10247	116
DWG 11114	60
DWG 11115	78
DWG 11137	88
DWG 11138	102
DWG 11421	150
DWG 11620	104
DWG 11621	62
DWG 11622	58
DWG 12386	70
DWG 12387	74
DWG 13870	128
DWG 13898	140
DWG 14088	28
DWG 14095	162
DWG 14096	166
DWG 14098	168
DWG 14366	86
DWG 14370	76
DWG 14761	52, 54
DWG 15739	110, 112
DWG 21186	114
DWG 25626	144
DWG 25899	156
DWG 25900	160
DWG 26852	68
DWG 26946	122
DWG 26947	134
DWG 26951	108
DWG 27556	142
DWG 27557	136
DWG 30185	56
DWG 76585	170
DWG 78268	152
DWG 78269	154
DWG 78275	158
DWG11027	4
DWG11028	10
DWG11029	18
DWG11030	24
DWG11033	34
DWG11084	46
DWG11113	94
DWG11139	72
DWG11534	98
DWG11589	42
DWG12381	106
DWG12384	66
DWG12389	96
DWG13163	32
DWG13164	12
DWG13170	8
DWG13171	40
DWG13189	36
DWG14066	80
DWG14067	82
DWG14087	14
DWG14089	26
DWG14090	38
DWG14092	44
DWG14093	48
DWG14094	50
DWG14097	164
DWG14304	30
DWG14315	20

Part Number	Page
DWG14327	6
DWG14331	126
DWG14332	22
DWG16456	130
DWG16458	146
DWG23829	100
DWG23947	92
DWG23948	84
DWG26640	138
DWG26854	64
DWG26857	90
DWG26944	132
DWG26945	118
DWG26949	120
DWG26954	124
DWG35902	172
N/A	150, 152, 154, 156, 158, 160
ZPM247000060	98

Great Plains Manufacturing, Inc.
Corporate Office: P.O. Box 5060
Salina, Kansas 67402-5060 USA

www.landpride.com