Table of Contents Part Number Index

Landscape Rakes

S/N 2028725-

LR05, LR15, LR25 & LR35

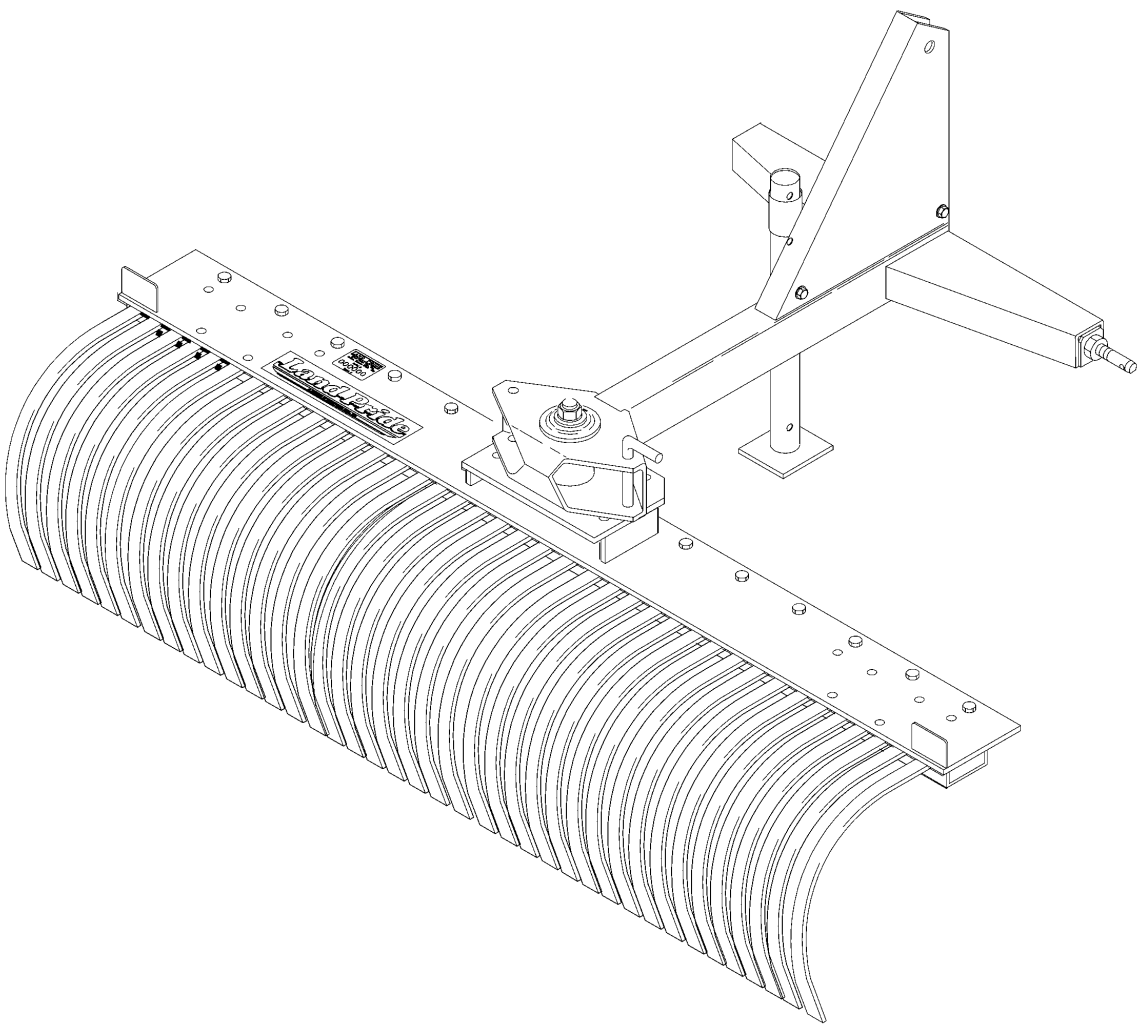

10410

302-185P

Parts Manual

Read the Operator's Manual entirely. When you see this symbol, the subsequent instructions and warnings are serious - follow without exception. Your life and the lives of others depend on it!

© Copyright 2018 Printed 07/09/18

Cover photo may show optional equipment not supplied with standard unit.

Table of Contents

Section 1: Introduction....4
Using This Manual....4
Manual Replacement Information....4
Manual Revisions....4
Touch-up Paint....4
Hardware Legend....5
Replacement Hardware....5
Serial Numbers....5
Part Number Service Coding....5

LR05 SERIES

Section 2: Frame and Rake....6
Frame and Rake (S/N 106399-)....6
Frame and Rake (S/N 106400+)....8
Section 3: Decals....10
Decal Placement (S/N 106399-)....10
Decal Placement (S/N 106400+)....12
Land Pride Touch-up Paints....14
Section 4: Options & Accessories....16
Dual Gauge Wheel....16
Flip Down Grader Blade....18
Hitch Extension Kit S/N (106400 to 976533)....20
Single Gauge Wheel (S/N 106399-)....22
Single Gauge Wheel (S/N 106400+)....24

LR15 SERIES

Section 2: Frame and Rake....26
Frame and Rake (S/N 33159-)....26
Frame and Rake (S/N 33160)....28
Frame and Rake (S/N 42980+)....30
Section 3: Decals....32
Decal Placement (S/N 33159-)....32
Decal Placement (S/N 33160)....34
Decal Placement (S/N 42980+)....36
Land Pride Touch-up Paints....38
Section 4: Options & Accessories....40
Flip Down Grader Blade....40
Gauge Wheel Dual (S/N 42979-)....42
Gauge Wheel Dual (S/N 42980+)....44
Gauge Wheel Tire (814-041C) 4" Wide....46
Gauge Wheel Tire (814-053C)....48

LR25 SERIES

Section 2: Frame and Rake....50
Frame and Rake (S/N 42980+)....50
Frame and Rake (SN 42979-)....52
Section 3: Decals....54
Decal Placement (S/N 42979-)....54
Decal Placement (S/N 42980+)....56
Land Pride Touch-up Paints....58
Section 4: Options & Accessories....60
Flip Down Grader Blade LR25....60
Gauge Wheel Dual (S/N 42979-)....62
Gauge Wheel Dual (S/N 42980+)....64
Gauge Wheel Single....66
Gauge Wheel Tire (814-041C)....68
Gauge Wheel Tire (814-053C)....70
Hydraulic Cylinder (810-005C)....72
Hydraulic Cylinder (810-162C)....74
Hydraulic Cylinder (810-162C) Red Lion....76
Rake Angling Kit....78

LR35 SERIES

Section 2: Frame & Rake....80
Frame & Rake....80
Section 3: Decals....82
Decal Placement....82
Land Pride Touch-up Paints....84
Section 4: Options & Accessories....86
Flip Down Grader Blade....86
Gauge Wheel Dual....88
Gauge Wheel Single....90
Gauge Wheel Tire (814-041C)....92
Gauge Wheel Tire (814-053C)....94
Hydraulic Cylinder (810-162C)....96
Hydraulic Cylinder (810-162C) Red Lion....98

Part Number Index....100

© Copyright 2018. All rights reserved.

Land Pride provides this publication “as is” without warranty of any kind, either expressed or implied. While every precaution has been taken in the preparation of this manual, Land Pride assumes no responsibility for errors or omissions. Neither is any liability assumed for damages resulting from the use of the information contained herein. Land Pride reserves the right to revise and improve its products as it sees fit. This publication describes the state of this product at the time of its publication, and may not reflect the product in the future. The illustrations in this manual are not intended for safe and proper assembly or disassembly of equipment. The illustrations are intended for ordering parts only.

Land Pride is registered trademark.

All other brands and product names are trademarks or registered trademarks of their respective holders.

Printed in the United States of America.

Alphabetized Table of Contents

LR05 SERIES

D

Decal Placement (S/N 106399-).....10
Decal Placement (S/N 106400+).....12
Dual Gauge Wheel.....16

F

Flip Down Grader Blade.....18
Frame and Rake (S/N 106399-).....6
Frame and Rake (S/N 106400+).....8

H

Hitch Extension Kit.....20

L

Land Pride Touch-up Paints.....14

S

Single Gauge Wheel (S/N 106399-).....22
Single Gauge Wheel (S/N 106400+).....24

LR15 SERIES

D

Decal Placement (S/N 33159-).....32
Decal Placement (S/N 33160).....34
Decal Placement (S/N 42980+).....36

F

Flip Down Grader Blade.....40
Frame and Rake (S/N 33159-).....26
Frame and Rake (S/N 33160).....28
Frame and Rake (S/N 42980+).....30

G

Gauge Wheel Dual (S/N 42979-).....42
Gauge Wheel Dual (S/N 42980+).....44
Gauge Wheel Tire (814-041C) 4" Wide.....46
Gauge Wheel Tire (814-053C).....48

L

Land Pride Touch-up Paints.....38

LR25 SERIES

D

Decal Placement (S/N 42979-).....54
Decal Placement (S/N 42980+).....56

F

Flip Down Grader Blade LR25.....60
Frame and Rake (S/N 42980+).....50
Frame and Rake (SN 42979-).....52

G

Gauge Wheel Dual (S/N 42979-).....62
Gauge Wheel Dual (S/N 42980+).....64
Gauge Wheel Single.....66
Gauge Wheel Tire (814-041C).....68
Gauge Wheel Tire (814-053C).....70

H

Hydraulic Cylinder (810-005C).....72
Hydraulic Cylinder (810-162C).....74
Hydraulic Cylinder (810-162C) Red Lion.....76

L

Land Pride Touch-up Paints.....58

R

Rake Angling Kit.....78

LR35 SERIES

D

Decal Placement.....82

F

Flip Down Grader Blade.....86
Frame & Rake.....80

G

Gauge Wheel Dual.....88
Gauge Wheel Single.....90
Gauge Wheel Tire (814-041C).....92
Gauge Wheel Tire (814-053C).....94

H

Hydraulic Cylinder (810-162C).....96
Hydraulic Cylinder (810-162C) Red Lion.....98

L

Land Pride Touch-up Paints.....84

General Information

Using This Manual

This manual is divided into sections. The first section contains General Information. The remaining sections divide the machine into segments (i.e. Frames, Drives, Hydraulics, etc.) which illustrate and list all parts. A Parts Number Index is located at the back of the book.

The Land Pride parts in this manual are specially designed for this machine and should be replaced with Land Pride parts only.

The information in this manual is current at time of printing. Some parts may change to assure top performance.

Right-hand and left-hand as used in this manual are determined by facing the direction the machine will travel while in use.

Below is an example of two facing pages from a parts manual. Familiarize yourself with the type of information contained on these pages.

Manual Replacement Information

Replacement manuals are available. Refer to our website at www.landpride.com or e-mail us at lit@landpride.com for additional information. Our website continues to provide the most up-to-date manuals available.

Touch-up Paint

Repaint parts where paint is worn or scratched to prevent rust. Aerosol cans and touch-up bottles with brush applicator are available through your local dealer. Also available are quart and gallon size paints. Add QT or GL to end of the Aerosol P/N.

Land Pride color descriptions and part numbers are listed on the “Land Pride Touch-up Paints” page in the “Decals” section of this book. Color options vary by product.

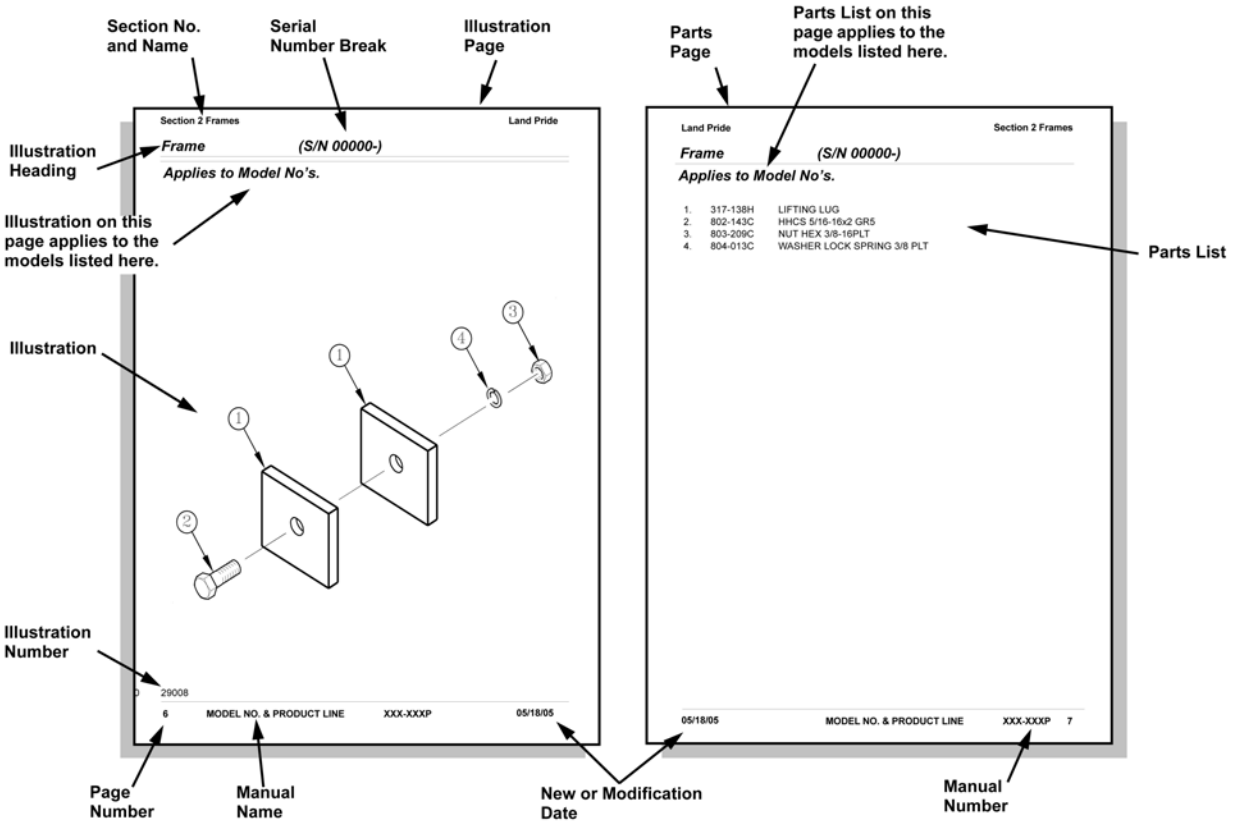

General Information

Hardware Legend

AR	As Required
BLADE	Blade Bolt
C	Cap Screw
CP	Cotter Pin
CPHSSS	Cup Point Hex Socket Set Screw
CPSHSS	Cup Point Square Head Set Screw
CPSQHSS	Cup Point Square Head Set Screw
CRFCHMS3	Cross Recess Flat Countersunk Head Machine Screw
CRPHMS	Cross Recess Pan Head Machine Screw
CRPHTFS	Cross Recess Pan Head Thread Forming
CRRHMS	Cross Recess Round Head Machine Screw
CRTHMS	Cross Recess Truss Head Machine Screw
CSNB	Countersunk Square Neck Bolt
FHMS	Flat Head Machine Screw
FTC	Full Thread Cap Screw
H	Hex Nut
HCLN	Hex Center Lock Nut
HFLCS	Hex Flange Lock Cap Screw
HFS	Hex Flange Screw
HFSLN	Hex Flange Serrated Lock Nut
HFSS	Hex Flange Serrated Screw
HHCS	Hex Head Cap Screw or Metric Bolt
HSBHCS	Hex Socket Button Head Cap Screw
HSFCHCS	Hex Socket Flat Countersunk Head Cap Screw
HSHCS	Hex Socket Head Cap Screw
HSSS	Hex Socket Head Screw
HTLN	Hex Top Lock Nut
HWHCS	Hex Washer Head Cap Screw
HWHMS	Hex Washer Head Machine Screw
HXBHCS	Hex Socket Button Head Cap Screw
J	Hex Jam Nut
JIC	37 Degree Tapered Thread
L	Helical Spring Lock Washer
LUG	Lug Bolt
NFC	National Fine Cap Screw
NPSM	National Pipe Straight Mechanical
NPTF	National Pipe Taper Fuel
P	Wide Plain Washer
PHMS	Pan Head Machine Screw
PLOW	Plow Bolt
RHMS	Round Head Machine Screw
RHSNB	Round Head Square Neck Bolt
SCREW LEVELING	Leveling Screw
SCREW THUMB	Thumb Screw
SCREW WELD	Weld Screw
SFCHMS	Slotted Flat Countersunk Head Machine Screw
SFHMS	Slotted Fillister Head Machine Screw
SP	Special
SP SCREW	Special Screw
SQHSS	Square Head Set Screw
SRHMS	Slotted Round Head Machine Screw
SSS	Socket Set Screw
STCS	Self Tapping Cap Screw
STHMS	Slotted Truss Head Machine Screw
WHEEL	Wheel Studs and Hub Long Bolts
WING	Wing Bolt

Replacement Hardware

The **Hardware Legend** above lists hardware abbreviations used in the parts list. All bolts and nuts are Grade 5 unless otherwise noted. The use of improper grades of hardware can result in personal injury, damage to equipment, or loss of property.

Colored Replacement Parts

Land Pride offers replacement parts in factory standard colors and also on select models in Green, Orange, Red and Blue. Because of the variety of colors available, special attention must be given to the part number to prevent ordering the wrong replacement part.

A suffix number corresponding to one of the colors below must be added at the end of Land Pride's part number when ordering a replacement part with that color.

81 . . . . . Green **83 . . . . .Red**
82 . . . . . Orange **84 . . . . .Blue**

For example, if you are ordering a replacement part with part number 555-555C and the part you need is red, then add the suffix 83 to the end of the number to make the part number read 555-555C83. Parts ordered without a suffix number will be supplied in factory standard colors.

Black Replacement Parts

Some parts are factory standard black and some must be special ordered black. If your part is special ordered black, a second part number with the additional suffix number 85 on the end will be available. In this situation you must order that part with the suffix number for it to be black. Parts that are factory standard black will not have the suffix number.

Part Number Service Coding

Within the parts list some part numbers are coded for revisions and interchangeability. See notations in revision column.

Serial Numbers

Always use the serial and model number when ordering parts. Refer to the Operator's Manual for serial number plate location.

(S/N 20001+)	Includes serial numbers 20001 and above (to the latest number)
(S/N 10001 to 20000)	Includes serial numbers between and including 10001 and 20000
(S/N 10000-)	Includes serial numbers 10000 and below (to the earliest number)

Frame and Rake (S/N 106399-)

Applies to LR0548, LR0560, LR0572

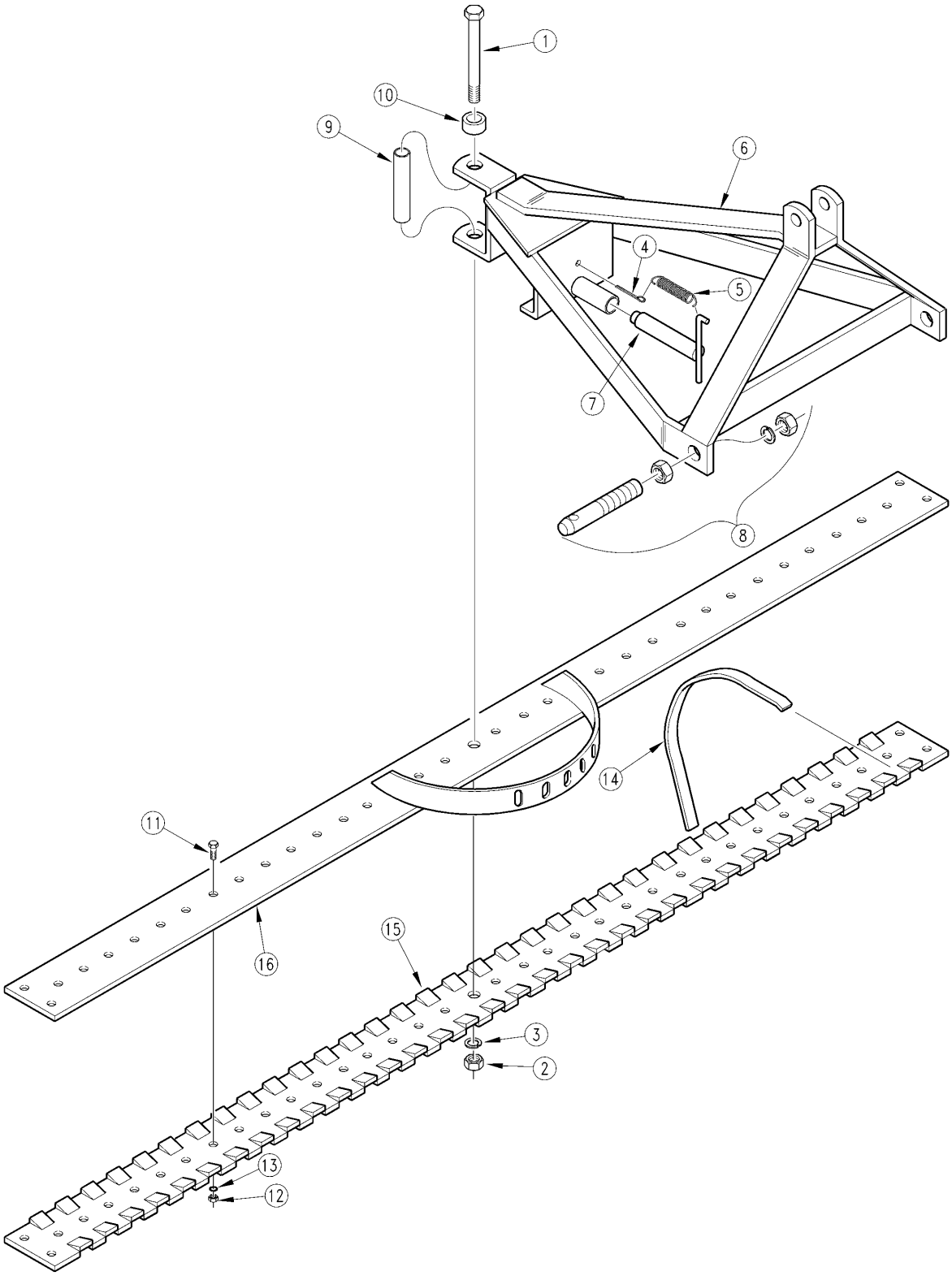

10813

Frame and Rake (S/N 106399-)

Applies to LR0548, LR0560, LR0572

Ref.	Part No.	Part Description	Comments	Revision
	dwg10813	Drawing Image Number		
1.	802-146C	HHCS 5/8-11X7 1/2 GR5		
2.	803-021C	NUT HEX 5/8-11 PLT		
3.	804-022C	WASHER LOCK SPRING 5/8 PLT		
4.	805-109C	PIN COTTER 1/8 X 1 1/4 PLT		
5.	807-038C	SPRING 5/8 OD X 3 1/4.072 WIRE		
6.	300-050H	05 SERIES RAKE FRAME WELDMENT		
7.	300-052H	PIVOT PIN WELDMENT		
8.	805-111C	PIN DRAW 7/8 X 5		
9.	300-176D	PIVOT TUBE		
10.	300-177D	BOSS		
11.	802-010C	HHCS 5/16-18X1 1/4 GR5		
12.	803-008C	NUT HEX 5/16-18 PLT		
13.	804-059C	WASHER INT-EXT 5/16 PLT		
14.	820-036C	RAKE TOOTH 3/4	LR0548 26 Total & LR0572 40 Total	
15.	302-003H	4' LOWER MOUNT PLATE WELDMENT		
15.	302-006H	6' LOWER MOUNT PLATE WELDMENT		
16.	302-002H	4' RAKE QUADRANT WELDMENT		
16.	302-005H	6' RAKE UPPER BAR MOUNT		

Frame and Rake (S/N 106400+)

Applies to LR0548, LR0560, LR0572

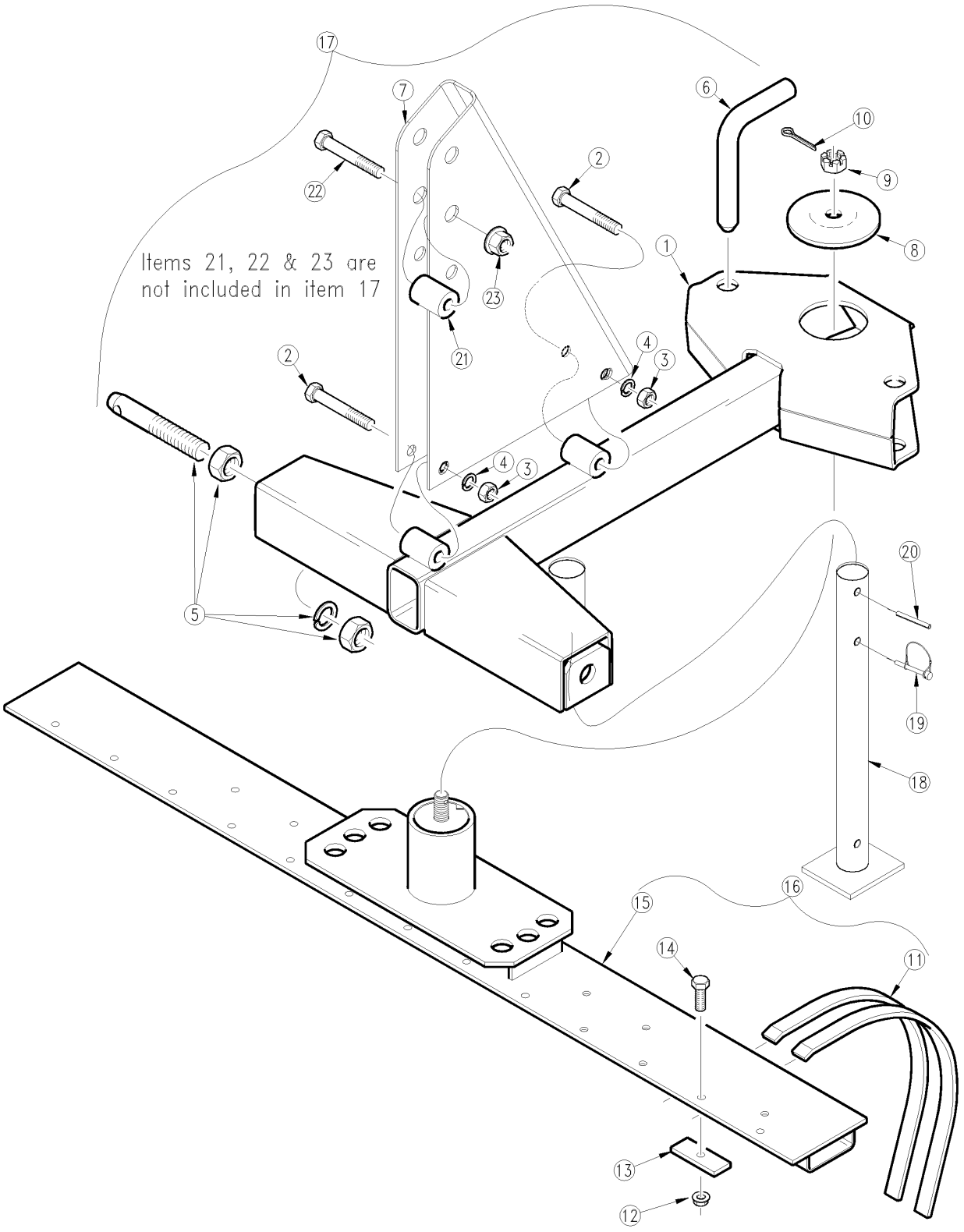

12009

Frame and Rake (S/N 106400+)

Applies to LR0548, LR0560, LR0572

Ref.	Part No.	Part Description	Comments	Revision
	Dwg 12009	Drawing Image Number		
1.	300-275H	05 FRAME WLDMT CAT1	S/N 976534+	
1.	300-131H	05 FRAME WELDMENT	S/N 976533-	
1.	300-131H82	05 FRAME WELDMENT ORANGE	S/N 976533-	
2.	802-226C	HHCS 1/2-13X2 3/4 GR5		
3.	803-020C	NUT HEX 1/2-13 PLT		
4.	804-015C	WASHER LOCK SPRING 1/2 PLT		
5.	805-111C	PIN DRAW 7/8 X 5	Cat. 1	
5.	300-137A	CAT 0 DRAW PINS & HARDWARE	Cat. 0	
6.	805-214C	PIN BENT 7/8 OD X 5 1/8 PLATED		Rev. 2
6.	300-337D	PIN LOCK 05 (RPBY 805-214C)		Rev 1; Use up stock
7.	300-522D	UPPER HITCH 05 SERIES	S/N 778019+	
7.	300-522D82	UPPER HITCH 05 SERIES ORANGE		
7.	300-370D	RPBY 300-522D	S/N 778018-	Rev. 2
7.	300-370D82	RPBY 300-522D82		
7.	300-132H	UPHTCH-05 WLDMT(RPBY 300-370D)		Rev 1; Use up stock
8.	301-151D	05 PIVOT CAP		
9.	803-185C	NUT HEX SLOTTED 5/8-18 PLT		
10.	805-017C	PIN COTTER 3/16 X 1 3/4 PLT		
11.	820-036C	RAKE TOOTH 3/4	LR0548 26 Total, LR0560 34 Total & LR0572 40 Total	
12.	803-177C	NUT HEX LOCK 5/16-18 FLG.		
13.	302-141D	05 RAKE TINE CLIP		
14.	802-010C	HHCS 5/16-18X1 1/4 GR5		
15.	302-190H	05 6' RAKE MOUNT WELDMENT		
15.	302-231H	05 5' RAKE WELDMENT	S/N 382816 +	
15.	302-189H	05 4' RAKE MOUNT WELDMENT		
16.	302-193A	0548 SERIES RAKE ASSY		
16.	302-232A	0560 SERIES RAKE ASSY	S/N 382816 +	
16.	N/A	0572 SERIES RAKE ASSY		
17.	300-135A	05 SERIES FRAME ASSY		
18.	300-003H	SUPPORT STAND RB05/LR05	S/N 477806+	
19.	805-065C	PIN WIRE RETAINING 1/4 X 1 3/4	S/N 477806+	
20.	805-161C	PIN ROLL 3/8 X 1 3/4 LG PLT	S/N 477806+	
21.	326-329D	SPACER 1 1/4ODX13/16IDX1 5/8		
22.	802-383C	HHCS 3/4-10X3 GR5		
23.	803-299C	NUT HEX FLG TOP LK 3/4-10 PLT		

Decal Placement (S/N 106399-)

Applies to LR0548, LR0560, LR0572

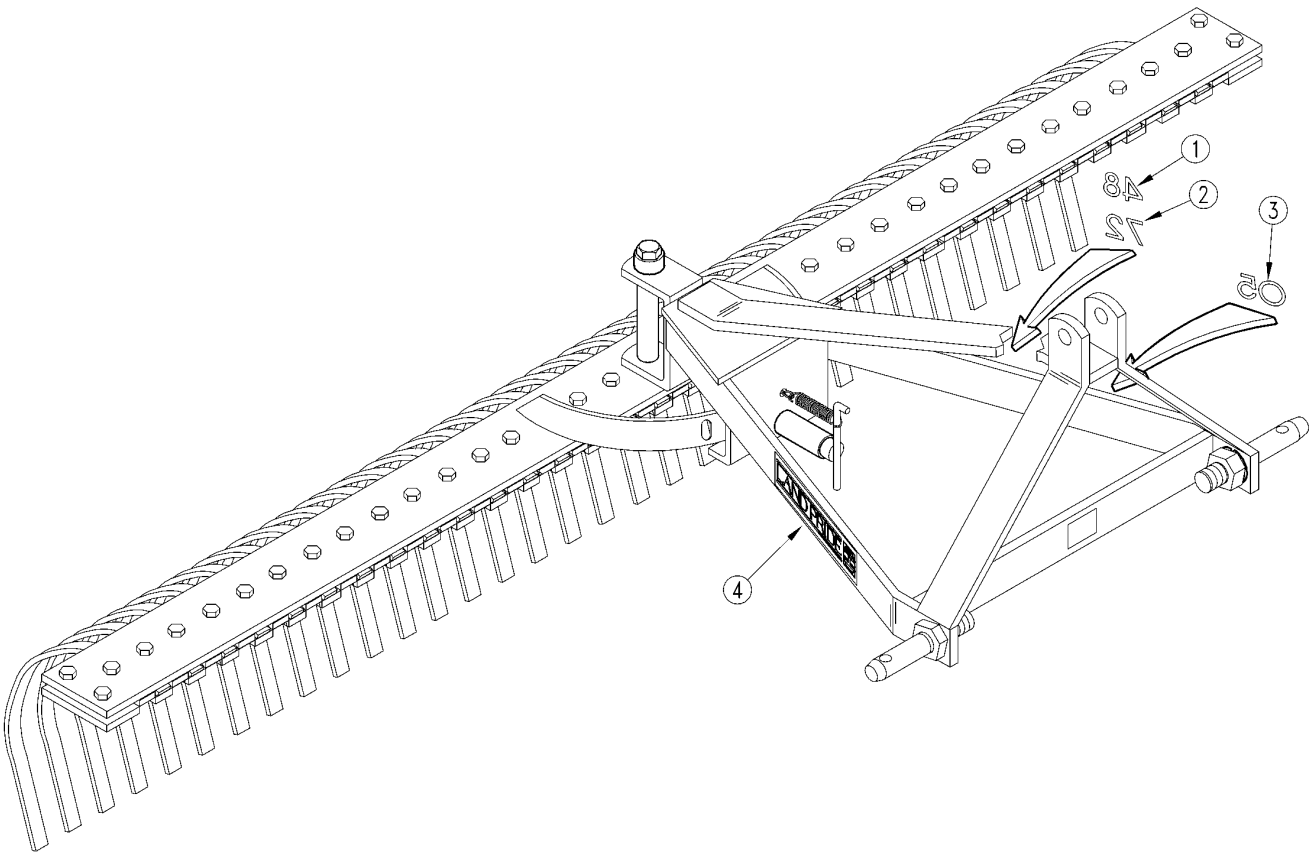

10820

Decal Placement (S/N 106399-)

Applies to LR0548, LR0560, LR0572

Ref.	Part No.	Part Description	Comments	Revision
	Dwg 10820	Drawing Image Number		
1.	818-087C	DECAL 48 LP - BLACK		
2.	818-092C	DECAL 72 LP - BLACK	Obsolete	
3.	818-083C	DECAL 05 SERIES LP - BLACK		
4.	818-164C	LP LOGO SMALL GREEN		

Decal Placement (S/N 106400+)

Applies to LR0548, LR0560, LR0572

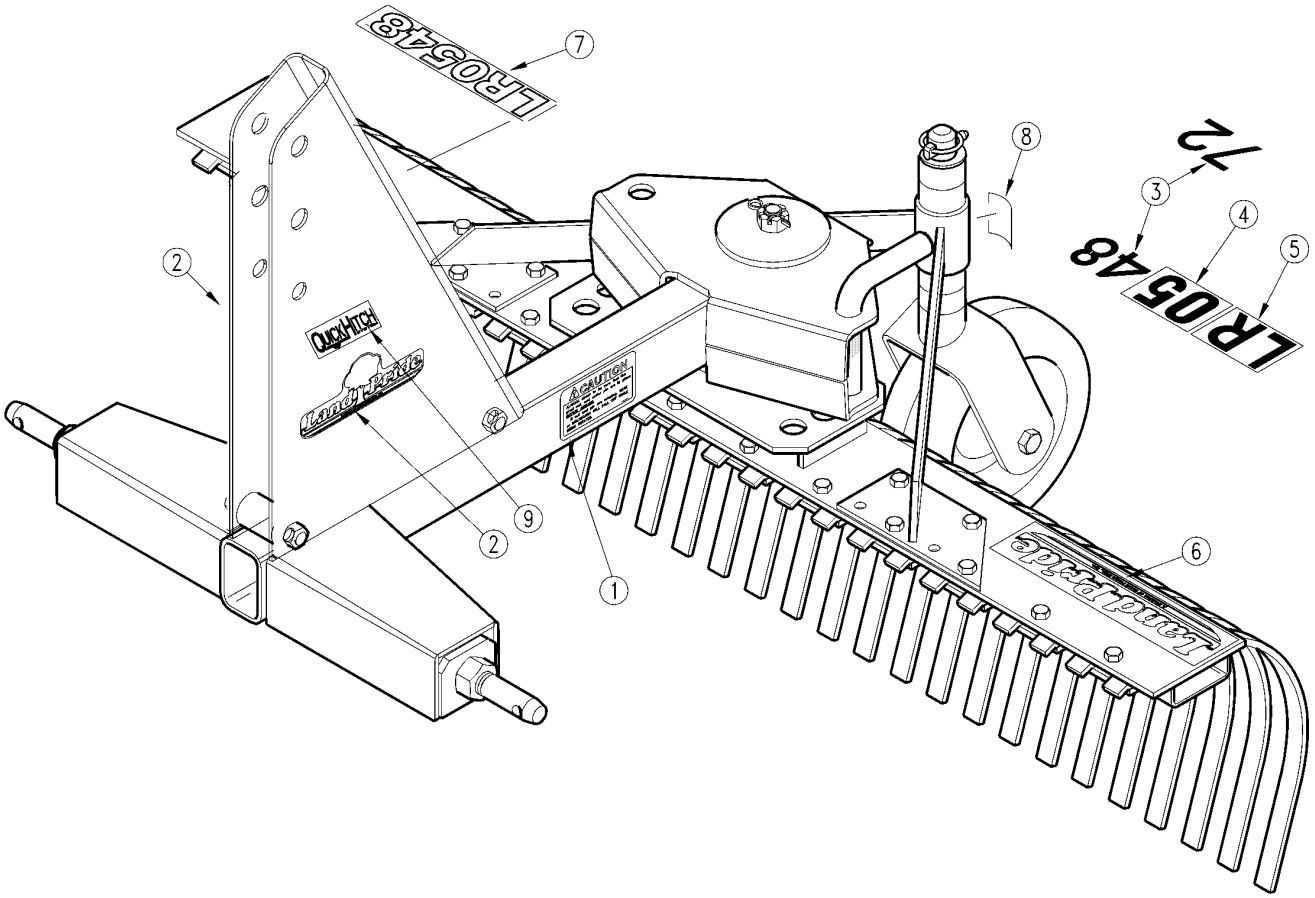

17572

Decal Placement (S/N 106400+)

Applies to LR0548, LR0560, LR0572

Ref.	Part No.	Part Description	Comments	Revision
	Dwg 17572	Drawing Image Number		
	302-196A	LR0548 DECAL PACKAGE		
	302-197A	LR0572 DECAL PACKAGE		
1.	818-202C	DECAL CAUTION FALL MBOARD/RAKE		
2.	818-890C	RPBY 838-963C	(S/N 252303+) Beige Unit	Rev. 3 not compat. w/Rev. 2.
2.	838-963C	DECAL LP 10" W/TREE BROWN/GOLD	Orange Unit	
3.	818-104C	DECAL 48 LP - BUCKSKIN	(S/N 252302-)	
3.	818-109C	DECAL 72 LP - BUCKSKIN	(S/N 252302-)	
4.	818-100C	N/A	OBSOLETE	
5.	818-735C	N/A	OBSOLETE	
6.	838-967C	DECAL LANDPRIDE 6" BROWN/GOLD	(S/N 822206+)	
6.	838-036C	RPBY 838-967C	(S/N 252303 to 822205)	
7.	818-993C	DECAL LR0572-GOLD	(S/N 252303+)	
7.	838-484C	DECAL LR0560-GOLD	(S/N 382816+)	
7.	818-992C	DECAL LR0548-GOLD	(S/N 252303+)	
8.	818-335C	DECAL RED NARROW REFLECTOR		
9.	838-517C	DECAL QUICK HITCH SYSTEM	S/N 976534+	

Land Pride Touch-up Paints

Applies to LR0548, LR0560, LR0572

No diagram associated with this Parts List

Land Pride Touch-up Paints

Applies to LR0548, LR0560, LR0572

Ref.	Part No.	Part Description	Comments	Revision
1.	821-011C	LP BEIGE SPRAY CAN	Spray can	
1.	821-070C	GLOSS BLACK SPRAY CAN	Spray can	
1.	821-054C	MED. RED SPRAY TRCK/CTR	Spray can	
1.	821-058C	GREEN SPRAY CUTTERS	Spray can	
1.	821-066C	ORANGE SPRAY CAN	Spray can	
1.	821-067C	BLUE SPRAY CAN	Spray can	
1.	821-080C	PAINT ALUMINUM/ZINC SPRAY CAN	Spray can	
2.	821-011CTU	LP BEIGE TOUCH-UP 5OZ	Touch-up bottle with brush	
2.	821-070CTU	GLOSS BLACK TOUCH-UP 5OZ	Touch-up bottle with brush	
2.	821-054CTU	MED RED TOUCH-UP 5OZ	Touch-up bottle with brush	
2.	821-058CTU	GREEN TOUCH-UP 5OZ	Touch-up bottle with brush	
2.	821-066CTU	ORANGE TOUCH-UP 5OZ	Touch-up bottle with brush	
2.	821-067CTU	BLUE TOUCH-UP 5OZ	Touch-up bottle with brush	
2.	821-080CTU	PAINT ALUMINUM/ZINC TOUCH UP	Touch-up bottle with brush	
3.	821-011CQT	LP BEIGE QUART	Quart can	
3.	821-070CQT	GLOSS BLACK QUART	Quart can	
3.	821-054CQT	MED RED QUART	Quart can	
3.	821-058CQT	GREEN QUART	Quart can	
3.	821-066CQT	ORANGE QUART	Quart can	
3.	821-067CQT	BLUE QUART	Quart can	
3.	821-080CQT	PAINT ALUMINUM/ZINC QUART	Quart can	
4.	821-011CGL	LP BEIGE GALLON	Gallon can	
4.	821-070CGL	GLOSS BLACK GALLON	Gallon can	
4.	821-054CGL	MED RED GALLON	Gallon can	
4.	821-058CGL	GREEN GALLON	Gallon can	
4.	821-066CGL	ORANGE GALLON	Gallon can	
4.	821-067CGL	BLUE GALLON	Gallon can	
4.	821-080CGL	PAINT ALUMINUM/ZINC GALLON	Gallon can	

Dual Gauge Wheel

Applies to LR0548, LR0560, LR0572

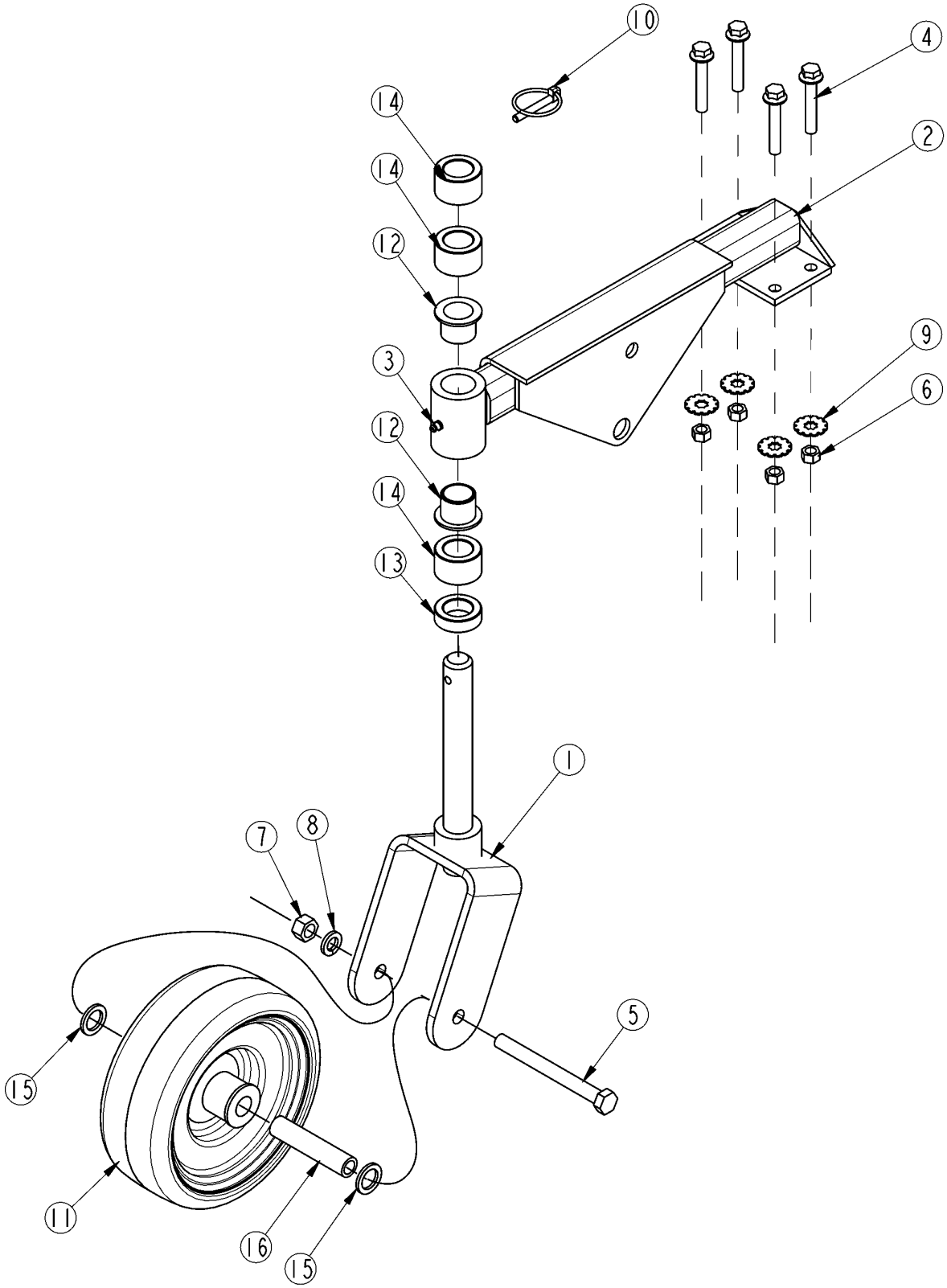

20991

Dual Gauge Wheel

Applies to LR0548, LR0560, LR0572

Ref.	Part No.	Part Description	Comments	Revision
	dwg20991	Drawing Image Number		
	302-258A	LR05 DUAL GAUGE WHEEL ASS		
1.	302-198H	LR05 GAUGE WHEEL YOKE		
2.	302-259H	LR05 DUAL GW MTG WELD		
3.	800-001C	GREASE ZERK STRAIGHT 1/4-28		
4.	802-191C	HFSS 3/8-16X2 1/4 GR5		
5.	802-322C	HHCS 1/2-20X5 GR5		
6.	803-014C	NUT HEX 3/8-16 PLT		
7.	803-018C	NUT HEX 1/2-20 PLT		
8.	804-015C	WASHER LOCK SPRING 1/2 PLT		
9.	804-060C	WASHER INT-EXT 3/8 PLT		
10.	805-126C	PIN LYNCH 1/4 X 1 3/4 PLT		
11.	814-079C	TIRE/WHEEL ASSY 18X9.50X8		
12.	817-048C	SPINDLE BUSHING		
13.	827-001C	SPACER 1/2		
14.	827-002C	SPACER 1		
15.	827-007C	G.W. SPACER TUBE-SHORT		
16.	827-012C	G.W. SPACER TUBE-LONG		

Flip Down Grader Blade

Applies to LR0548, LR0560, LR0572

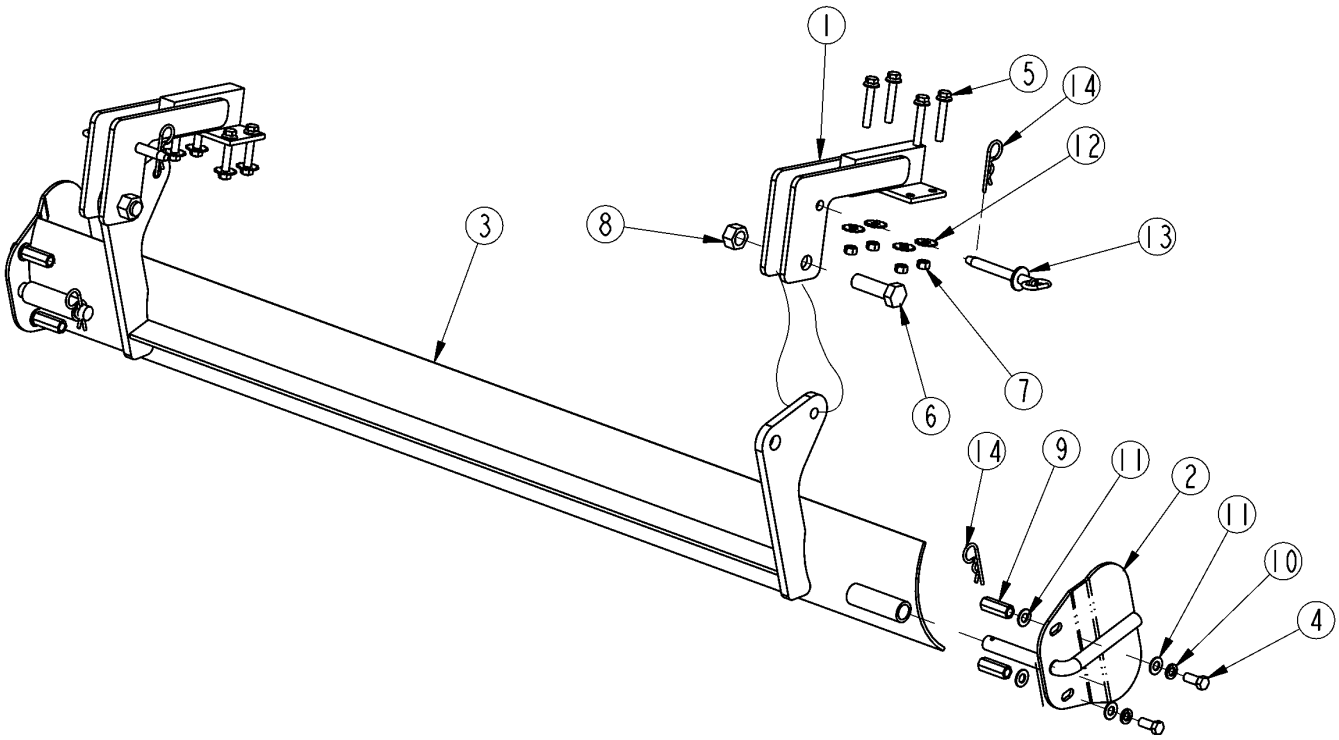

20992

Flip Down Grader Blade

Applies to LR0548, LR0560, LR0572

Ref.	Part No.	Part Description	Comments	Revision
	dwg20992	Drawing Image Number		
	302-236A	0548 BLADE/SIDE PLT ASSY		
	302-250A	0560 BLADE/SIDE PLT ASSY		
	302-252A	0572 BLADE/SIDE PLT ASSY		
1.	302-234H	05 GRADER BLADE MOUNT		
2.	302-235H	05 SIDE PLT WELD		
3.	302-249H	0560 GRADER BLADE WELD		
4.	802-080C	HHCS 7/16-14X1 GR5		
5.	802-191C	HFSS 3/8-16X2 1/4 GR5		
6.	802-212C	HHCS 3/4-10X2 1/2 GR5		
7.	803-014C	NUT HEX 3/8-16 PLT		
8.	803-026C	NUT LOCK 3/4-10 PLT		
9.	803-067C	NUT HEX CPLR 7/16-14X1 3/4 PLT		
10.	804-014C	WASHER LOCK 7/16 PLT		
11.	804-041C	WASHER FLAT 7/16 SAE PLT		
12.	804-060C	WASHER INT-EXT 3/8 PLT		
13.	805-002C	PIN HITCH 1/2 X 3 USABLE LG		
14.	805-032C	PIN HAIR COTTER .148 WIRE		

Hitch Extension Kit S/N (106400 to 976533)

Applies to LR0548, LR0560, LR0572

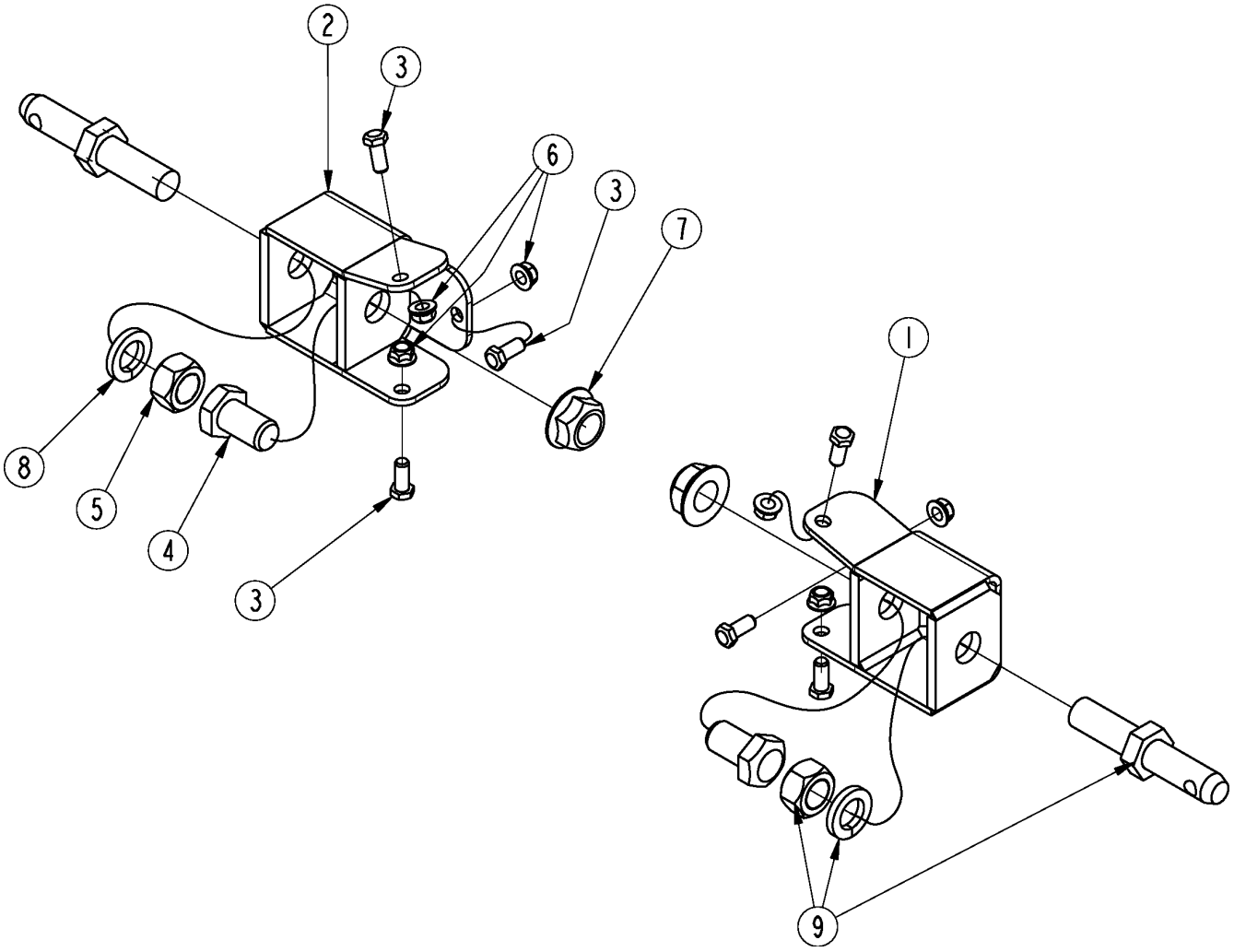

39260

Hitch Extension Kit S/N (106400 to 976533)

Applies to LR0548, LR0560, LR0572

Ref.	Part No.	Part Description	Comments	Revision
	Dwg 39260	Image No.		
	300-274A	EXTENSION CAT0 TO CAT1 KIT	Beige Kit	
	300-274A82	EXTENSION CAT0 TO CAT1 KIT ORANGE	Orange Kit	
	*			
1.	300-272H	RH EXTENSION CAT0 TO CAT1	Beige	
1.	300-272H82	RH EXTENSION CAT0 TO CAT1 ORANGE	Orange	
2.	300-273H	LH EXTENSION CAT0 TO CAT1	Beige	
2.	300-273H82	LH EXTENSION CAT0 TO CAT1 ORANGE	Orange	
3.	802-417C	HHCS 3/8-16X7/8 GR5		
4.	802-622C	HHCS 7/8-9X1 1/2 GR5		
5.	803-149C	NUT HEX 7/8-14 PLT		
6.	803-209C	NUT FLANGE LOCK 3/8-16 PLT		
7.	803-349C	NUT HEX FLG LCK 7/8-9 PLT		
8.	804-037C	WASHER LOCK SPRING 7/8 PLT		
9.	805-111C	PIN HTCH C1 7/8-14 THD W/N		

Single Gauge Wheel (S/N 106399-)

Applies to LR0548, LR0560, LR0572

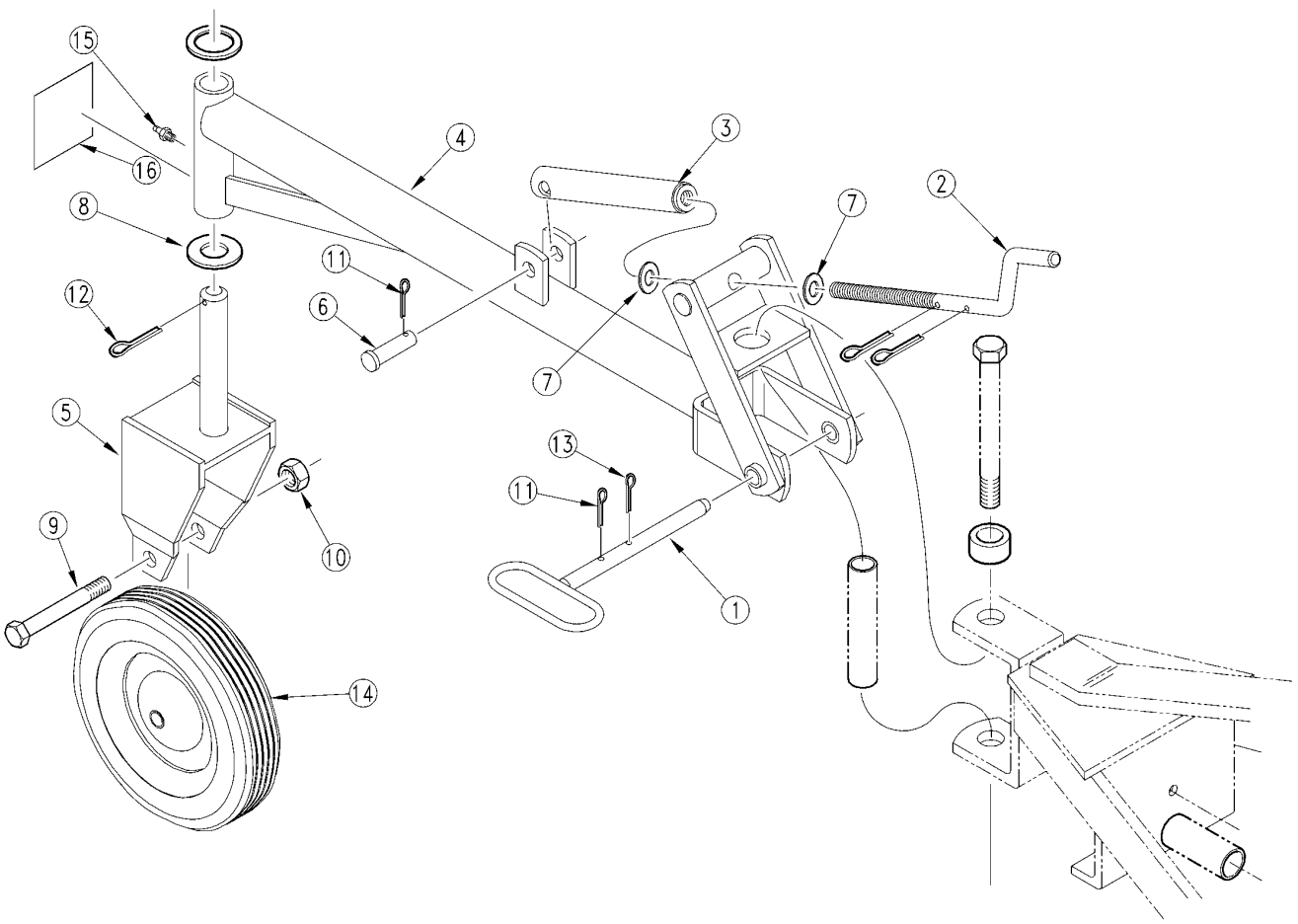

11412

Single Gauge Wheel (S/N 106399-)

Applies to LR0548, LR0560, LR0572

Ref.	Part No.	Part Description	Comments	Revision
	dwg11412	Drawing Image Number		
	302-020A	05 SERIES RAKE SINGLE GW ASSY	Includes one of items 1 through 6; 8; 9; 10 and 12 through 15; two of item 7 and three of item 11	
1.	302-031H	GAUGE WHEEL PIN WELDMENT		
2.	890-138C	CRANK 1/2		
3.	302-025H	TURNBUCKLE		
4.	302-021H	GAUGE WHEEL FRAME WELDMENT		
5.	302-024H	YOKE WELDMENT		
6.	805-127C	PIN CLEVIS 1/2 X 1 3/4		
7.	804-016C	WASHER FLAT 1/2 SAE PLT		
8.	804-061C	WASHER MACH 1.50 X 1.00 X 18GA		
9.	802-039C	HHCS 1/2-13X3 GR5		
10.	803-019C	NUT LOCK 1/2-13 PLT		
11.	805-045C	PIN COTTER 5/32 X 1 1/4 LG		
12.	805-089C	PIN COTTER 5/32 X 1 1/2 LONG		
13.	805-032C	PIN HAIR COTTER .148 WIRE		
14.	814-040C	WHEEL & TIRE 8 X 1.75 RIB		
15.	800-001C	GREASE ZERK STRAIGHT 1/4-28		
16.	818-298C	DECAL GREASE 25HRS BLACK/WHITE		

Single Gauge Wheel (S/N 106400+)

Applies to LR0548, LR0560, LR0572

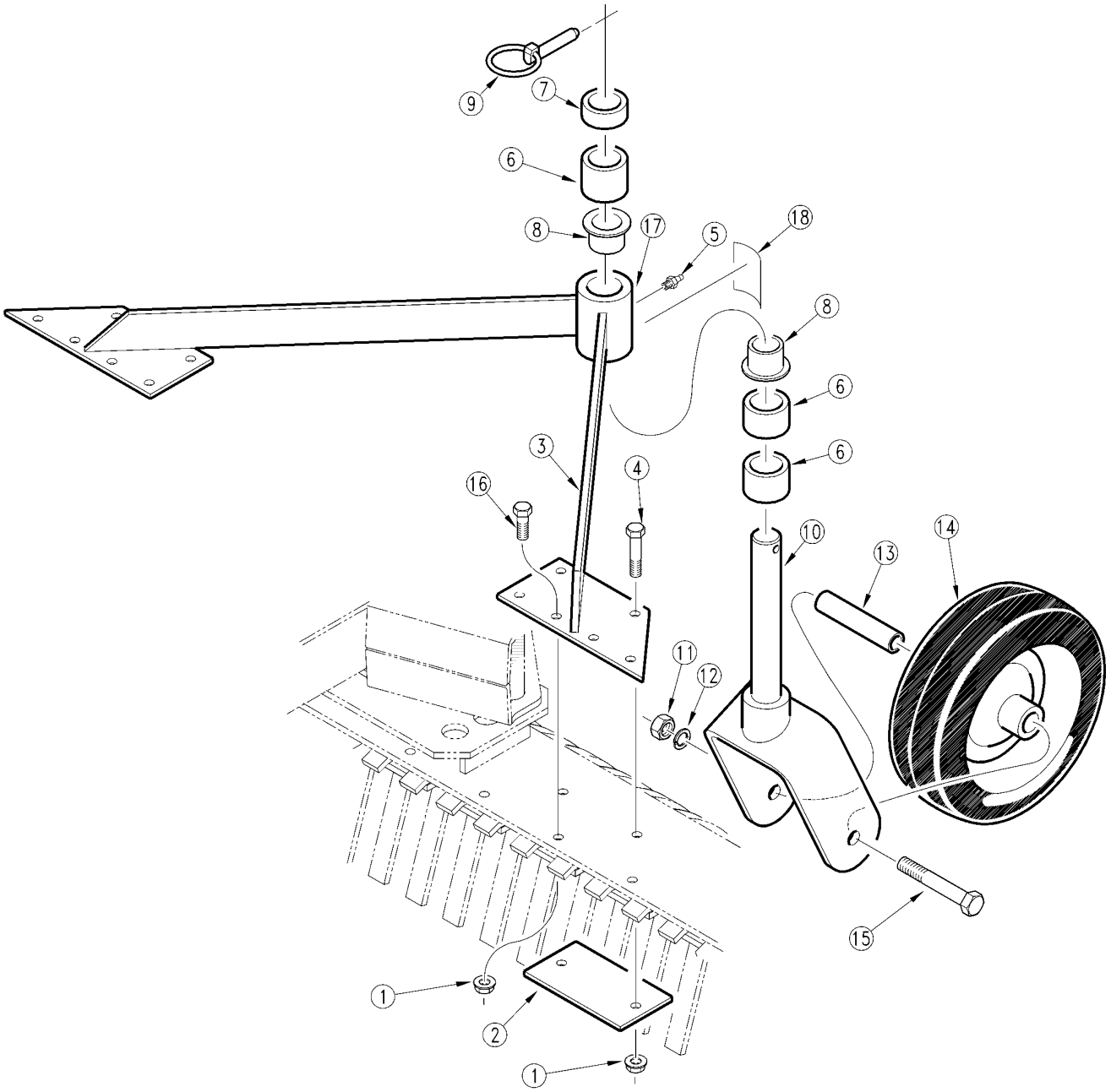

12010

Single Gauge Wheel (S/N 106400+)

Applies to LR0548, LR0560, LR0572

Ref.	Part No.	Part Description	Comments	Revision
	dwg12010	Drawing Image Number		
	302-195A	05 SERIES GAUGE WHEEL ASSY		
1.	803-177C	NUT HEX LOCK 5/16-18 FLG.		
2.	302-152D	GAUGE WHEEL BOLT PLATE		
3.	302-191H	GAUGE WHEEL ARM WELDMENT		
4.	802-138C	HHCS 5/16-18X2 1/4 GR5		
5.	800-001C	GREASE ZERK STRAIGHT 1/4-28		
6.	827-002C	SPACER 1"		
7.	827-001C	SPACER 1/2"		
8.	817-048C	SPINDLE BUSHING		
9.	805-126C	PIN LYNCH 1/4 X 1 3/4 PLT		
10.	302-198H	GAUGE WHEEL YOKE 1560		
11.	803-018C	NUT HEX 1/2-20 PLT		
12.	804-015C	WASHER LOCK SPRING 1/2 PLT		
13.	827-012C	G.W. SPACER TUBE-LONG		Rev. 2
13.	310-305D	GW SPCR TB-LNG (RPBY 827-012C)		Rev 1; Use up stock
14.	814-079C	WHEEL-SOLID 2 3/4 X 8 1/4		
15.	802-322C	HHCS 1/2-20X5 GR5		
16.	802-012C	HHCS 5/16-18X1 1/2 GR5		
17.	818-298C	DECAL GREASE 25HRS BLACK/WHITE		
18.	818-335C	DECAL RED NARROW REFLECTOR		

Frame and Rake (S/N 33159-)

Applies to LR1560, LR1572, LR1584, LR1596

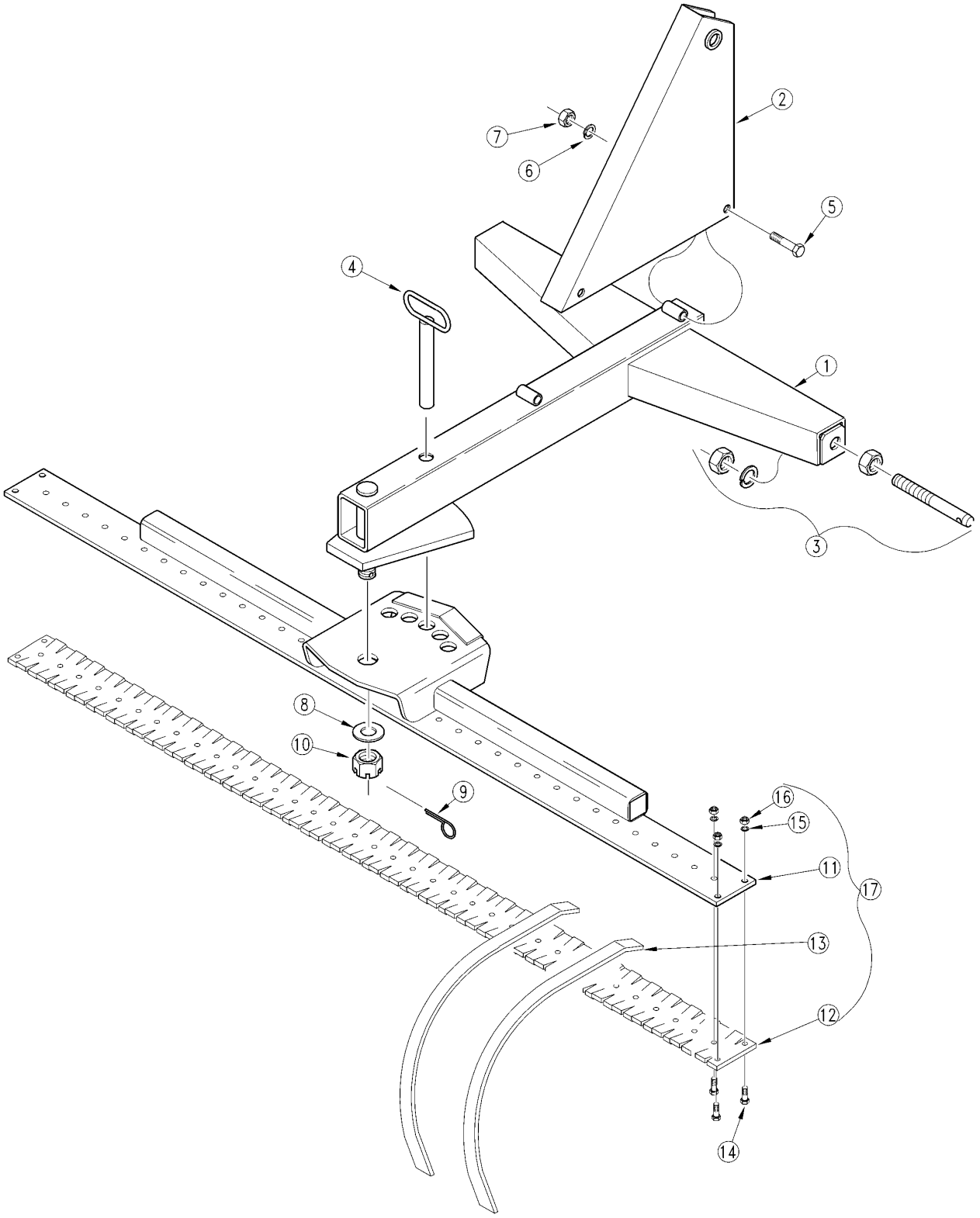

15184

Frame and Rake (S/N 33159-)

Applies to LR1560, LR1572, LR1584, LR1596

Ref.	Part No.	Part Description	Comments	Revision
	dwg15184	Image Reference: 15184		
1.	300-063H	15 SERIES FRAME		
2.	300-060H	REPL BY 300-190D		
3.	805-111C	PIN DRAW 7/8 X 5		
4.	300-053H	PIN WELDMENT		
5.	802-099C	HHCS 1/2-13X3 1/4 GR5		
6.	804-015C	WASHER LOCK SPRING 1/2 PLT		
7.	803-020C	NUT HEX 1/2-13 PLT		
8.	804-055C	WASHER SPINDLE - 7/8		
9.	805-016C	PIN COTTER 3/16 X 1 1/4 PLT		
10.	803-029C	NUT HEX SLOTTED 7/8-14 PLT		
11.	302-115H	15 SERIES - 6' RAKE MOUNT		
11.	302-116H	15 SERIES - 7' RAKE MOUNT		
11.	302-117H	15 SERIES - 8' RAKE MOUNT		
12.	302-008D	6' RAKE LOWER MOUNTING PLATE		
12.	302-066D	7' LOWER MOUNTING PLATE		
12.	302-014D	8' RAKE LOWER MOUNTING PLATE		
13.	820-037C	RAKE TOOTH 1	LR1572 36 Total, LR1584 42 Total & LR1596 48 Total	
14.	802-022C	HHCS 3/8-16X1 1/2 GR5		
15.	804-060C	WASHER INT-EXT 3/8 PLT		
16.	803-014C	NUT HEX 3/8-16 PLT		
17.	302-007A	15 SERIES - 6' RAKE ASSEMBLY	Includes one of items 11 and 12; thirty six of item 13 and thirty nine of items 14; 15 and 16	
17.	302-076A	15 SERIES - 7' RAKE ASSEMBLY	Includes one of items 11 and 12; fourty two of item 13 and fourty five of items 14; 15 and 16	
17.	302-010A	15 SERIES - 8' RAKE ASSEMBLY	Includes one of items 11 and 12; fourty eight of item 13 and fifty one of items 14; 15 and 16	

Frame and Rake (S/N 33160)

Applies to LR1560, LR1572, LR1584, LR1596

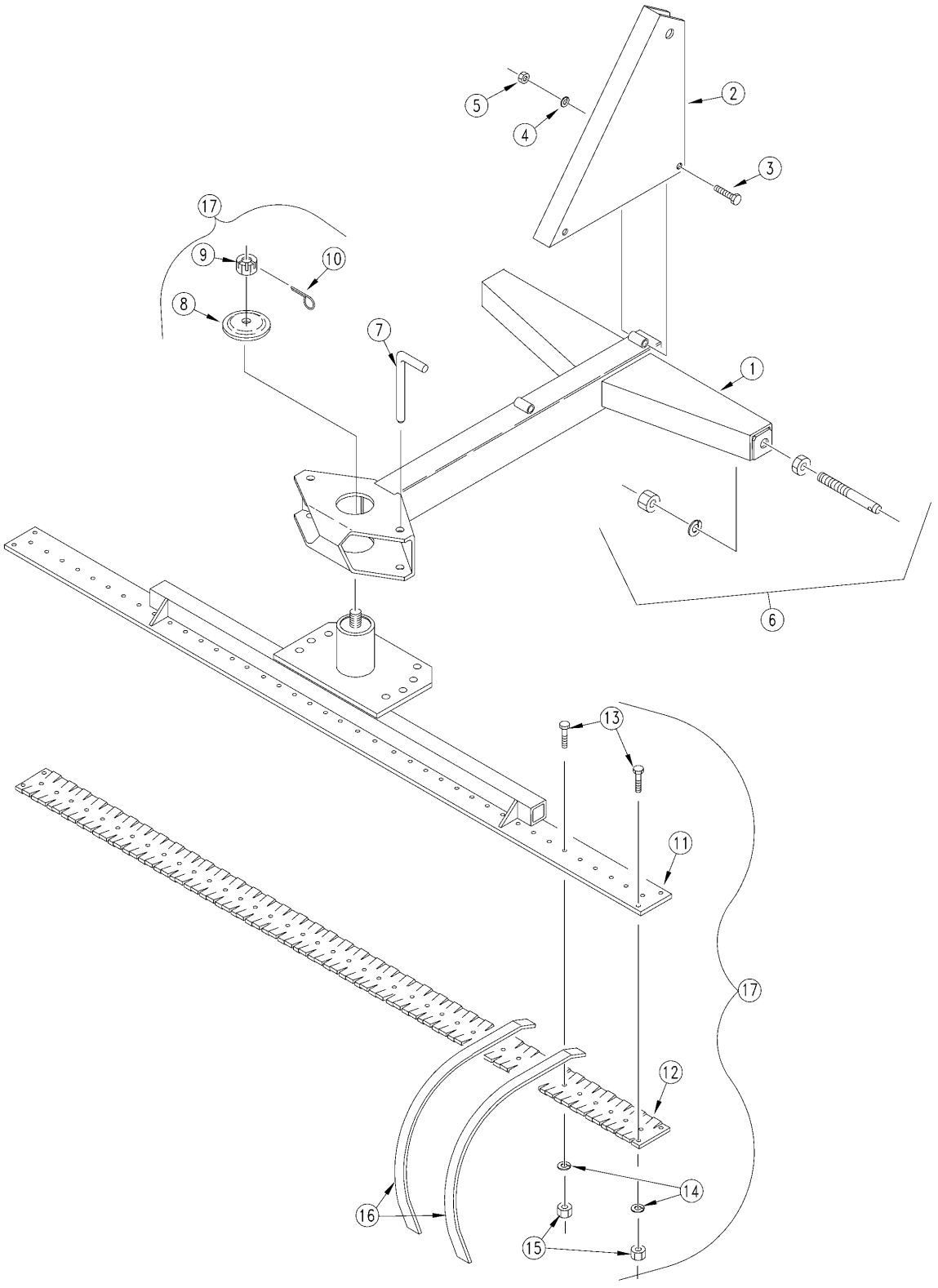

10409

Frame and Rake (S/N 33160)

Applies to LR1560, LR1572, LR1584, LR1596

Ref.	Part No.	Part Description	Comments	Revision
	dwg10409	Drawing Image Number		
	300-109A	15 SERIES FRAME BUNDLE	Includes one of items 1; 2 and 7 and two of items 3 through 6	
1.	300-105H	15 SERIES FRAME WELD		
2.	300-190D	UPPER HITCH		
3.	802-099C	HHCS 1/2-13X3 1/4 GR5		
4.	804-015C	WASHER LOCK SPRING 1/2 PLT		
5.	803-020C	NUT HEX 1/2-13 PLT		
6.	805-111C	PIN DRAW 7/8 X 5		
7.	805-213C	PIN BENT 1 OD X 7 PLATED		Rev. 2
7.	300-299D	RPBY 805-213C		Rev 1; Use up stock
8.	301-139D	PIVOT CAP		
9.	803-053C	NUT HEX SLOTTED 3/4-16		
10.	805-017C	PIN COTTER 3/16 X 1 3/4 PLT		
11.	302-134H	15-5' RAKE MOUNT		
11.	302-135H	15-6' RAKE MOUNT		
1.	302-133H	15-7' RAKE MOUNT		
11.	302-136H	15-8' RAKE MOUNT		
12.	302-114D	5' RAKE MOUNT PLT - LOWER		
12.	302-008D	6' RAKE LOWER MOUNTING PLATE		
12.	302-066D	7' LOWER MOUNTING PLATE		
12.	302-014D	8' RAKE LOWER MOUNTING PLATE		
13.	802-022C	HHCS 3/8-16X1 1/2 GR5		
14.	804-060C	WASHER INT-EXT 3/8 PLT		
15.	803-014C	NUT HEX 3/8-16 PLT		
16.	820-037C	RAKE TOOTH 1	LR1560 30 Total, LR1572 36 Total, LR1584 42 Total & LR1596 48 Total	
17.	302-170A	LR1560 RAKE ASS'Y		Rev. 2
17.	302-137A	RPBY 302-170A		Rev 1; Use up stock
17.	302-171A	LR1572 RAKE ASS'Y		Rev. 2
17.	302-138A	RPBY 302-171A		Rev 1; Use up stock
17.	302-172A	LR1584 RAKE ASS'Y		Rev. 2
17.	302-139A	RPBY 302-172A		Rev 1; Use up stock
17.	302-173A	LR1596 RAKE ASS'Y		Rev. 2
17.	302-140A	RPBY 302-173A		Rev 1; Use up stock

Frame and Rake (S/N 42980+)

Applies to LR1560, LR1572, LR1584, LR1596

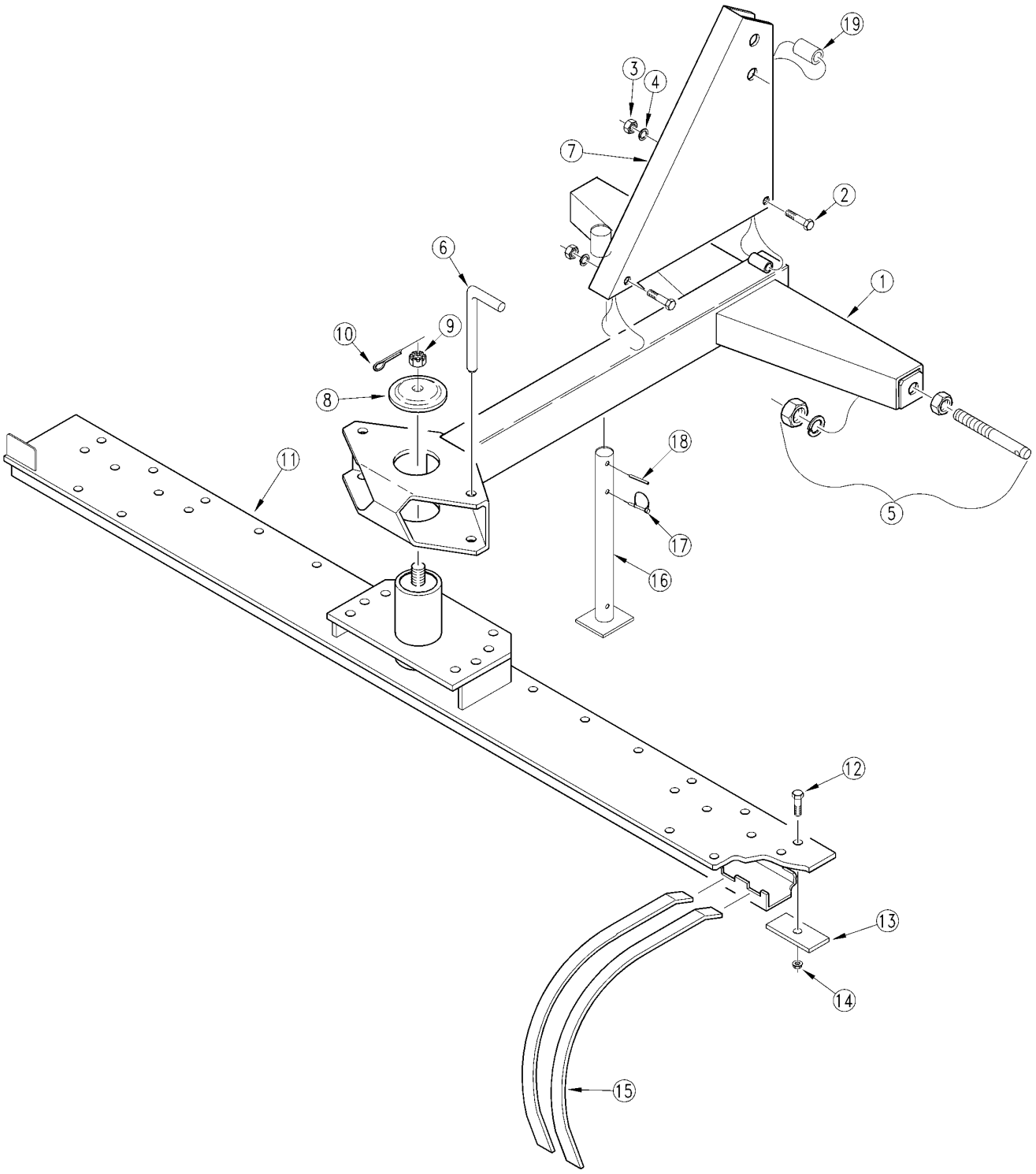

10324

Frame and Rake (S/N 42980+)

Applies to LR1560, LR1572, LR1584, LR1596

Ref.	Part No.	Part Description	Comments	Revision
	dwg10324	Drawing Image Number		
	300-120B	15 RB & RAKE HARDWARE BAG	Includes one of item 6 and two of items 2 through 5.	
	300-109A	15 SERIES FRAME BUNDLE	Includes one of items 1; 7; 11 and part no. 300-120B.	
	302-170A	LR1560 RAKE ASS'Y		
	302-171A	LR1572 RAKE ASS'Y		
	302-172A	LR1584 RAKE ASS'Y		
	302-173A	LR1596 RAKE ASS'Y		
1.	300-105H	15 SERIES FRAME WELD		
1.	300-105H82	15 SERIES FRAME WELD ORANGE		
2.	802-099C	HHCS 1/2-13X3 1/4 GR5		
3.	803-020C	NUT HEX 1/2-13 PLT		
4.	804-015C	WASHER LOCK SPRING 1/2 PLT		
5.	805-111C	PIN DRAW 7/8 X 5		
6.	805-213C	PIN BENT 1 OD X 7 PLATED		Rev. 2
6.	300-299D	RPBY 805-213C		Rev 1; Use up stock
7.	300-190D	UPPER HITCH		
7.	300-190D82	UPPER HITCH ORANGE		
8.	301-139D	PIVOT CAP		
9.	803-053C	NUT HEX SLOTTED 3/4-16		
10.	805-017C	PIN COTTER 3/16 X 1 3/4 PLT		
11.	302-163H	LR1560 RAKE MOUNT WELDMENT		
11.	302-164H	LR1572 RAKE MOUNT WELDMENT		
11.	302-165H	LR1584 RAKE MOUNT WELDMENT		
11.	302-166H	LR1596 RAKE MOUNT WELDMENT		
12.	802-022C	HHCS 3/8-16X1 1/2 GR5		
13.	302-130D	RAKE TINE CLIP		
14.	803-171C	MAC-LOK 3/8-16 SUPER FLANGE		
15.	820-037C	RAKE TOOTH 1	LR1560 30 Total, LR1572 36 Total, LR1584 42 Total & LR1596 48 Total	
16.	300-171H	SUPPORT STAND LR & RB35/25/15	S/N 475594+	
17.	805-065C	PIN WIRE RETAINING 1/4 X 1 3/4	S/N 475594+	
18.	805-161C	PIN ROLL 3/8 X 1 3/4 LG PLT	S/N 475594+	
19.	308-339D	FLOATING TOP LINK SPACER TUBE	Optional Quick-Hitch Spacer	

Decal Placement (S/N 33159-)

Applies to LR1560, LR1572, LR1584, LR1596

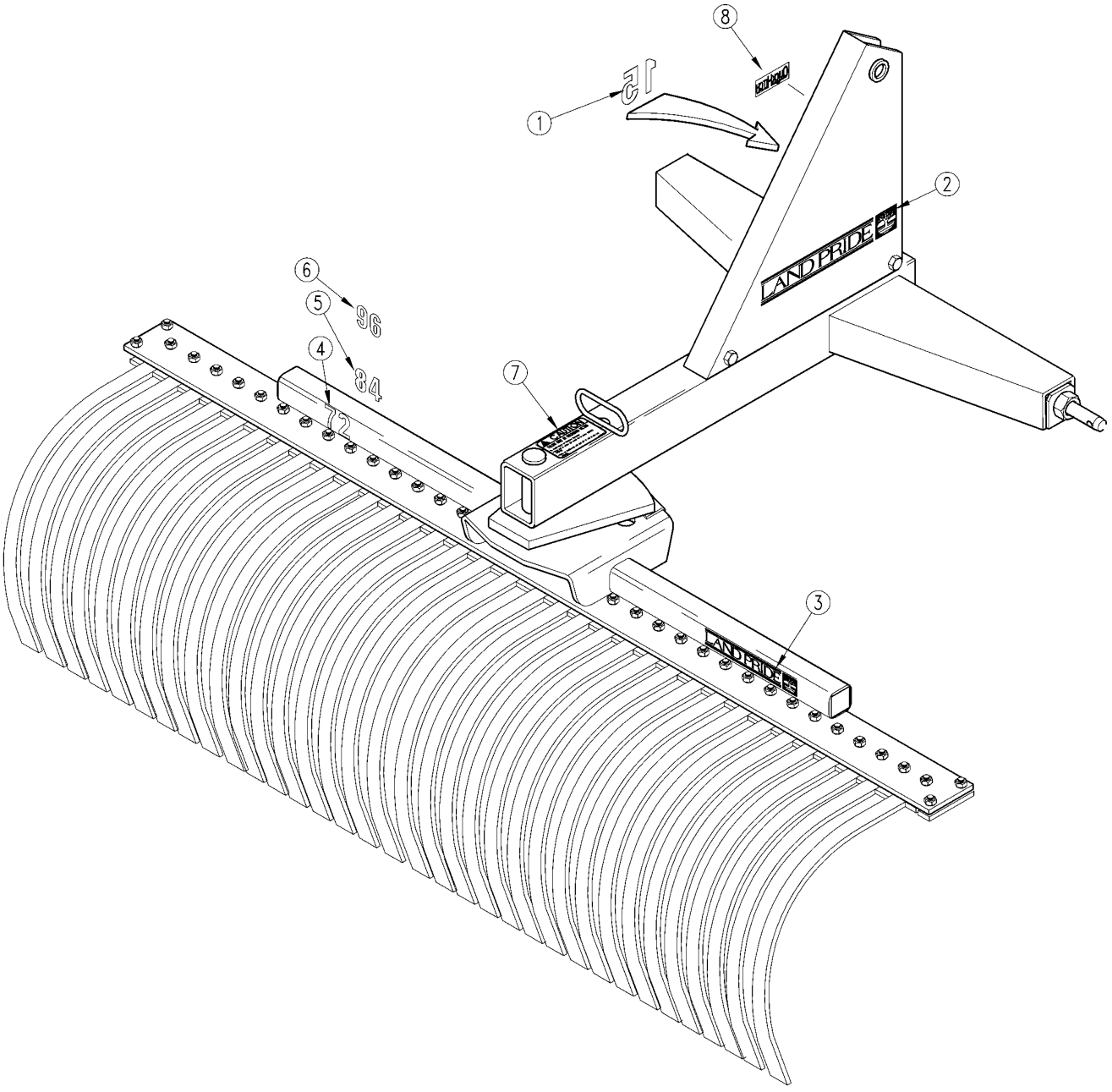

15191

Decal Placement (S/N 33159-)

Applies to LR1560, LR1572, LR1584, LR1596

Ref.	Part No.	Part Description	Comments	Revision
	Dwg 15191	Drawing Image Number		
1.	818-084C	DECAL 15 SERIES LP - BLACK	Obsolete	
2.	818-164C	LP LOGO SMALL GREEN		
3.	818-165C	LP LOGO SMALL BUCKSKIN		
4.	818-154C	DECAL 72 LP SMALL BUCKSKIN	Obsolete	
5.	818-155C	DECAL 84 LP SMALL BUCKSKIN		
6.	818-156C	DECAL 96 LP SMALL BUCKSKIN		
7.	818-202C	DECAL CAUTION FALL MBOARD/RAKE		
8.	838-517C	DECAL QUICK HITCH SYSTEM		

Decal Placement (S/N 33160)

Applies to LR1560, LR1572, LR1584, LR1596

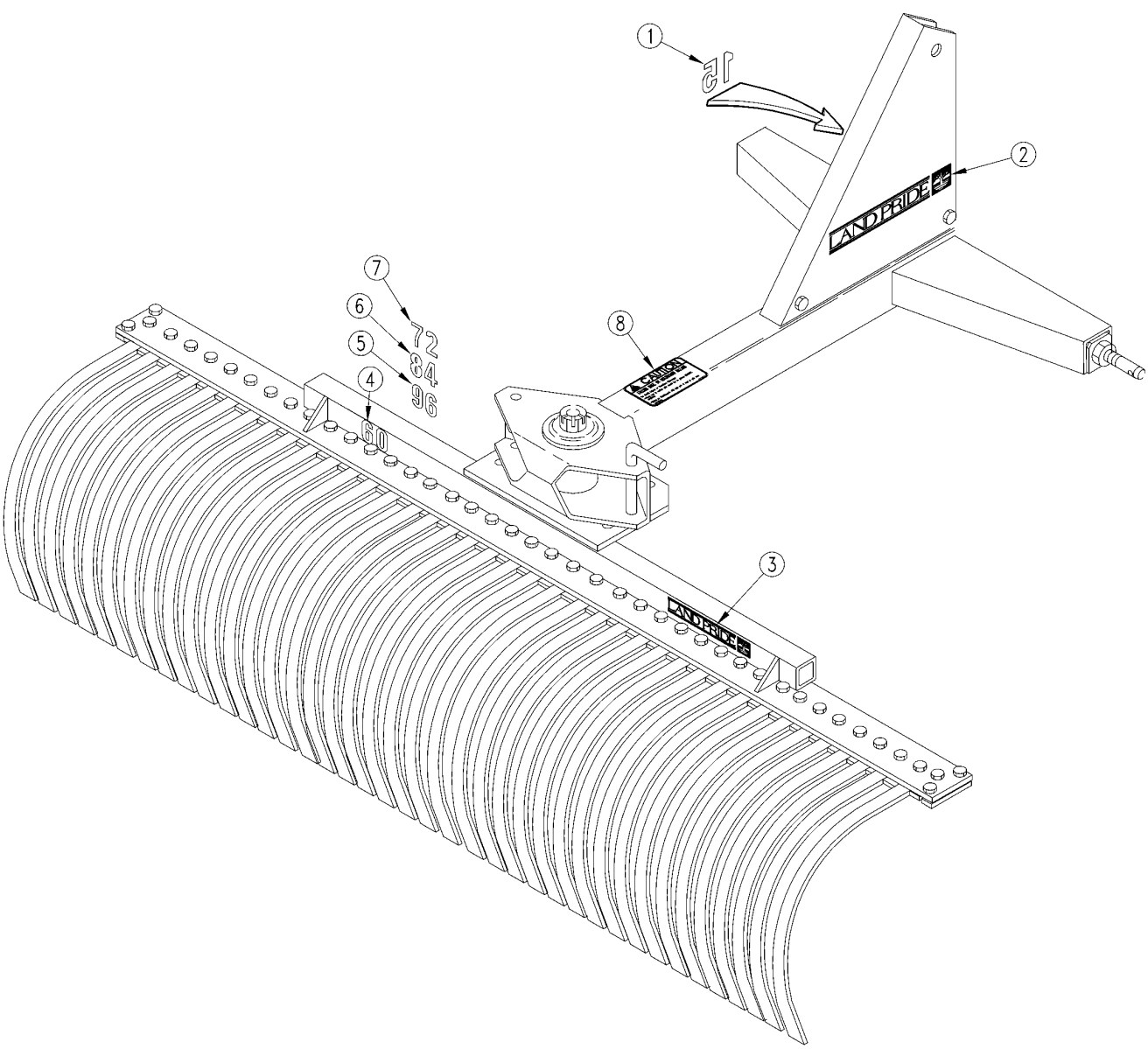

10408

Decal Placement (S/N 33160)

Applies to LR1560, LR1572, LR1584, LR1596

Ref.	Part No.	Part Description	Comments	Revision
	Dwg 10408	Drawing Image Number		
	302-148A	LR1560 DECAL PACKAGE		
	302-149A	LR1572 DECAL PACKAGE		
	302-150A	LR1584 DECAL PACKAGE		
	302-151A	LR1596 DECAL PACKAGE		
		*		
1.	818-084C	DECAL 15 SERIES LP - BLACK	Obsolete	
2.	818-164C	LP LOGO SMALL GREEN		
3.	818-165C	LP LOGO SMALL BUCKSKIN		
4.	818-231C	DECAL 60 LP SMALL BUCKSKIN		
5.	818-154C	DECAL 72 LP SMALL BUCKSKIN	Obsolete	
6.	818-155C	DECAL 84 LP SMALL BUCKSKIN		
7.	818-156C	DECAL 96 LP SMALL BUCKSKIN		
8.	818-202C	DECAL CAUTION FALL MBOARD/RAKE		

Decal Placement (S/N 42980+)

Applies to LR1560, LR1572, LR1584, LR1596

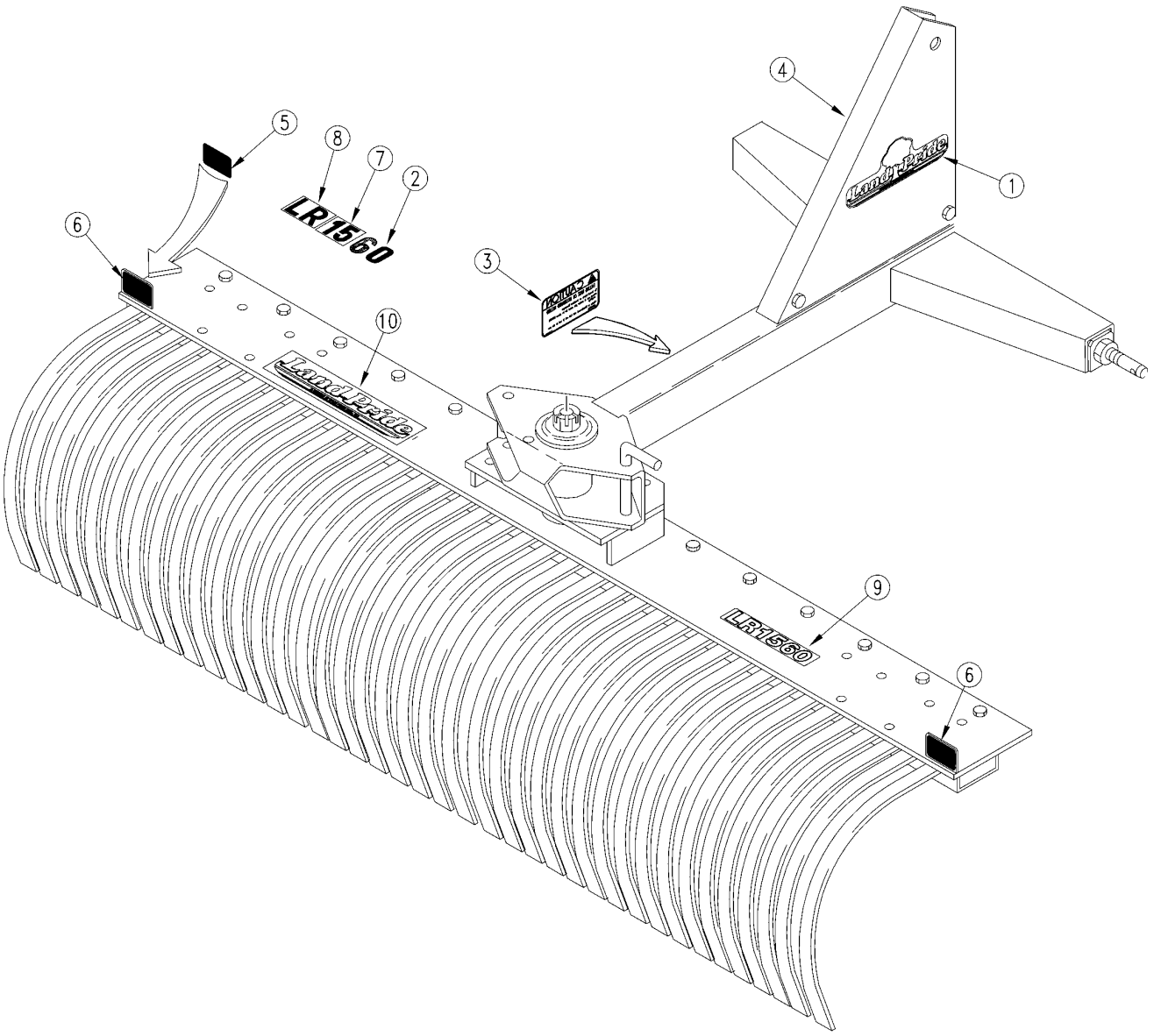

17573

Decal Placement (S/N 42980+)

Applies to LR1560, LR1572, LR1584, LR1596

Ref.	Part No.	Part Description	Comments	Revision
	Dwg 17573	Drawing Image Number		
1.	818-891C	RPBY 838-962C	(S/N 252303+) Beige Unit	Rev. 2 not compat. w/Rev. 1.
1.	838-962C	DECAL LP 13" W/TREE BROWN/GOLD	Orange Unit	
2.	818-107C	N/A	OBSOLETE	
2.	818-109C	DECAL 72 LP - BUCKSKIN	(S/N 252302-)	
2.	818-111C	DECAL 84 LP - BUCKSKIN	(S/N 252302-)	
2.	818-112C	DECAL 96 LP - BUCKSKIN	(S/N 252302-)	
3.	818-202C	DECAL CAUTION FALL MBOARD/RAKE		
4.	818-891C	RPBY 838-962C	(S/N 252303+) Beige Unit	Rev. 3 not compat. w/Rev. 2.
4.	838-962C	DECAL LP 13" W/TREE BROWN/GOLD	Orange Unit	
5.	818-229C	DECAL AMBER REFLECTOR	LR1596 ONLY	
6.	818-230C	DECAL RED REFLECTOR	LR1596 ONLY	
7.	818-101C	DECAL 15 SERIES LP - BUCKSKIN	(S/N 252302-)	
8.	818-735C	N/A	OBSOLETE	
9.	818-994C	DECAL LR1560-BEIGE	(S/N 252303+)	
9.	818-995C	DECAL LR1572-BEIGE	(S/N 252303+)	
9.	818-996C	DECAL LR1584-BEIGE	(S/N 252303+)	
9.	818-997C	DECAL LR1596-BEIGE	(S/N 252303+)	
10.	818-900C	RPBY 848-161C	(S/N 252303+)	
10.	848-161C	DECAL LANDPRIDE 13.25 BRWN/GLD		

Land Pride Touch-up Paints

Applies to LR1560, LR1572, LR1584, LR1596

No diagram associated with this Parts List

Land Pride Touch-up Paints

Applies to LR1560, LR1572, LR1584, LR1596

Ref.	Part No.	Part Description	Comments	Revision
1.	821-011C	LP BEIGE SPRAY CAN	Spray can	
1.	821-070C	GLOSS BLACK SPRAY CAN	Spray can	
1.	821-054C	MED. RED SPRAY TRCK/CTR	Spray can	
1.	821-058C	GREEN SPRAY CUTTERS	Spray can	
1.	821-066C	ORANGE SPRAY CAN	Spray can	
1.	821-067C	BLUE SPRAY CAN	Spray can	
1.	821-080C	PAINT ALUMINUM/ZINC SPRAY CAN	Spray can	
2.	821-011CTU	LP BEIGE TOUCH-UP 5OZ	Touch-up bottle with brush	
2.	821-070CTU	GLOSS BLACK TOUCH-UP 5OZ	Touch-up bottle with brush	
2.	821-054CTU	MED RED TOUCH-UP 5OZ	Touch-up bottle with brush	
2.	821-058CTU	GREEN TOUCH-UP 5OZ	Touch-up bottle with brush	
2.	821-066CTU	ORANGE TOUCH-UP 5OZ	Touch-up bottle with brush	
2.	821-067CTU	BLUE TOUCH-UP 5OZ	Touch-up bottle with brush	
2.	821-080CTU	PAINT ALUMINUM/ZINC TOUCH UP	Touch-up bottle with brush	
3.	821-011CQT	LP BEIGE QUART	Quart can	
3.	821-070CQT	GLOSS BLACK QUART	Quart can	
3.	821-054CQT	MED RED QUART	Quart can	
3.	821-058CQT	GREEN QUART	Quart can	
3.	821-066CQT	ORANGE QUART	Quart can	
3.	821-067CQT	BLUE QUART	Quart can	
3.	821-080CQT	PAINT ALUMINUM/ZINC QUART	Quart can	
4.	821-011CGL	LP BEIGE GALLON	Gallon can	
4.	821-070CGL	GLOSS BLACK GALLON	Gallon can	
4.	821-054CGL	MED RED GALLON	Gallon can	
4.	821-058CGL	GREEN GALLON	Gallon can	
4.	821-066CGL	ORANGE GALLON	Gallon can	
4.	821-067CGL	BLUE GALLON	Gallon can	
4.	821-080CGL	PAINT ALUMINUM/ZINC GALLON	Gallon can	

Flip Down Grader Blade

Applies to LR1560, LR1572, LR1584, LR1596

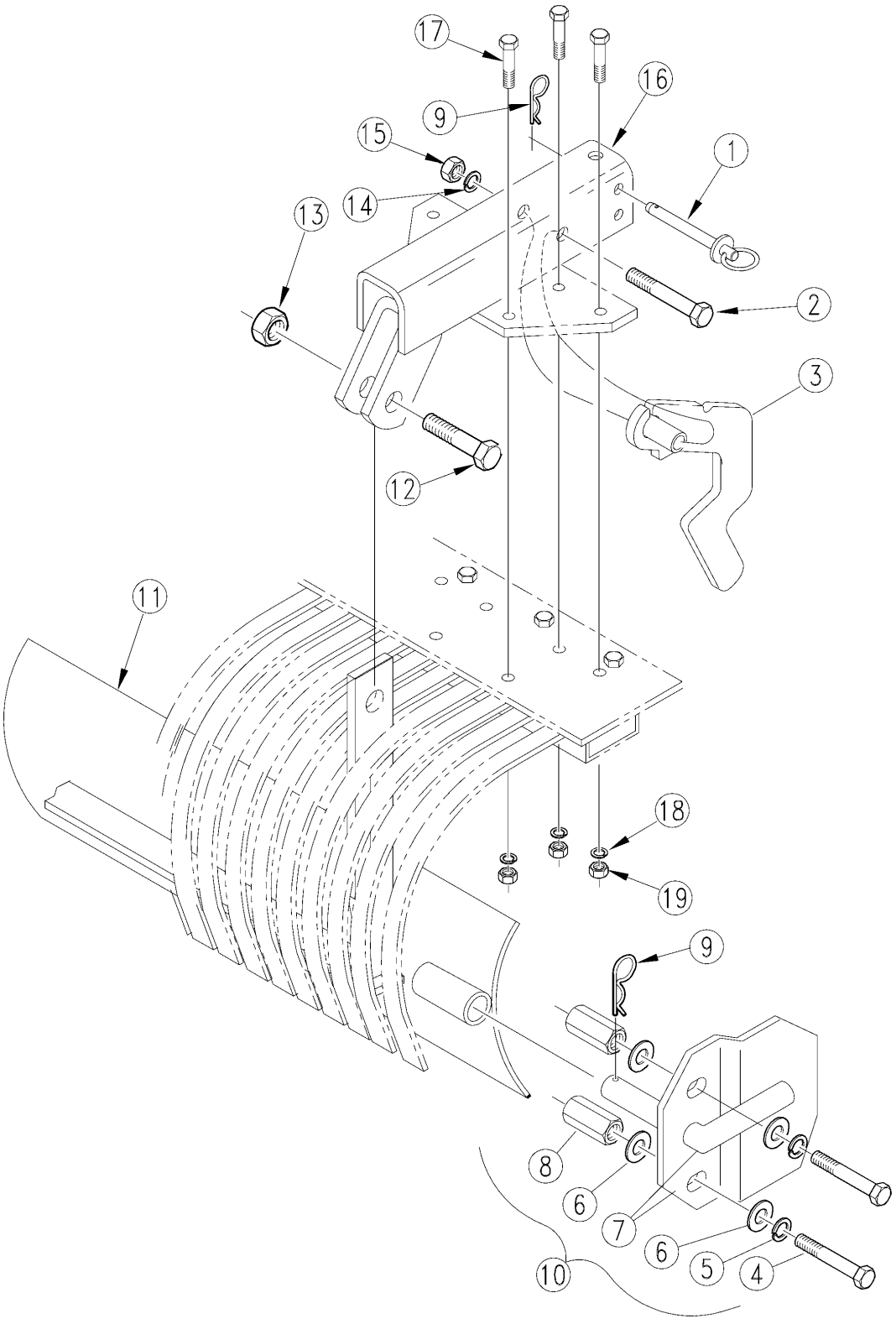

20983

Flip Down Grader Blade

Applies to LR1560, LR1572, LR1584, LR1596

Ref.	Part No.	Part Description	Comments	Revision
	dwg20983	Drawing Image Number		
	302-105A	6' GRADER BLADE ASY	Consist of items 1 - 15	
	302-106A	7' GRADER BLADE ASY	Consist of items 1 - 15	
	302-107A	8' GRADER BLADE ASY	Consist of items 1 - 15	
	302-260A	GB MOUNT LESS DUAL GW	Consist of items 16 - 19	
1.	805-001C	PIN BENT 3/8 X 3 USABLE LW/PIN		
2.	802-039C	HHCS 1/2-13X3 GR5		
3.	302-097H	BLADE LOCK HANDLE WELDMENT		
4.	802-080C	HHCS 7/16-14X1 GR5		
5.	804-014C	WASHER LOCK 7/16 PLT		
6.	804-041C	WASHER FLAT 7/16 SAE PLT		
7.	302-017H	SIDE PLATE WELDMENT		
8.	803-067C	NUT HEX CPLR 7/16-14X1 3/4 PLT		
9.	805-032C	PIN HAIR COTTER .148 WIRE		
10.	302-124S	GRADER BLADE SIDE PLATE ASSY		
11.	302-145H	5' GRADER BLADE WELDMENT		
11.	302-098H	6' GRADER BLADE WELDMENT		
11.	302-099H	7' GRADER BLADE WELDMENT		
11.	302-100H	8' GRADER BLADE WELDMENT		
12.	802-086C	HHCS 3/4-10X2 3/4 GR5		
13.	803-026C	NUT LOCK 3/4-10 PLT		
14.	804-015C	WASHER LOCK SPRING 1/2 PLT		
15.	803-020C	NUT HEX 1/2-13 PLT		
16.	302-204H	GRADER BLD MTG PULL TYPE		
17.	802-216C	HHCS 3/8-16X2 3/4 GR5		
18.	804-060C	WASHER INT-EXT 3/8 PLT		
19.	803-014C	NUT HEX 3/8-16 PLT		

Gauge Wheel Dual (S/N 42979-)

Applies to LR1560, LR1572, LR1584, LR1596

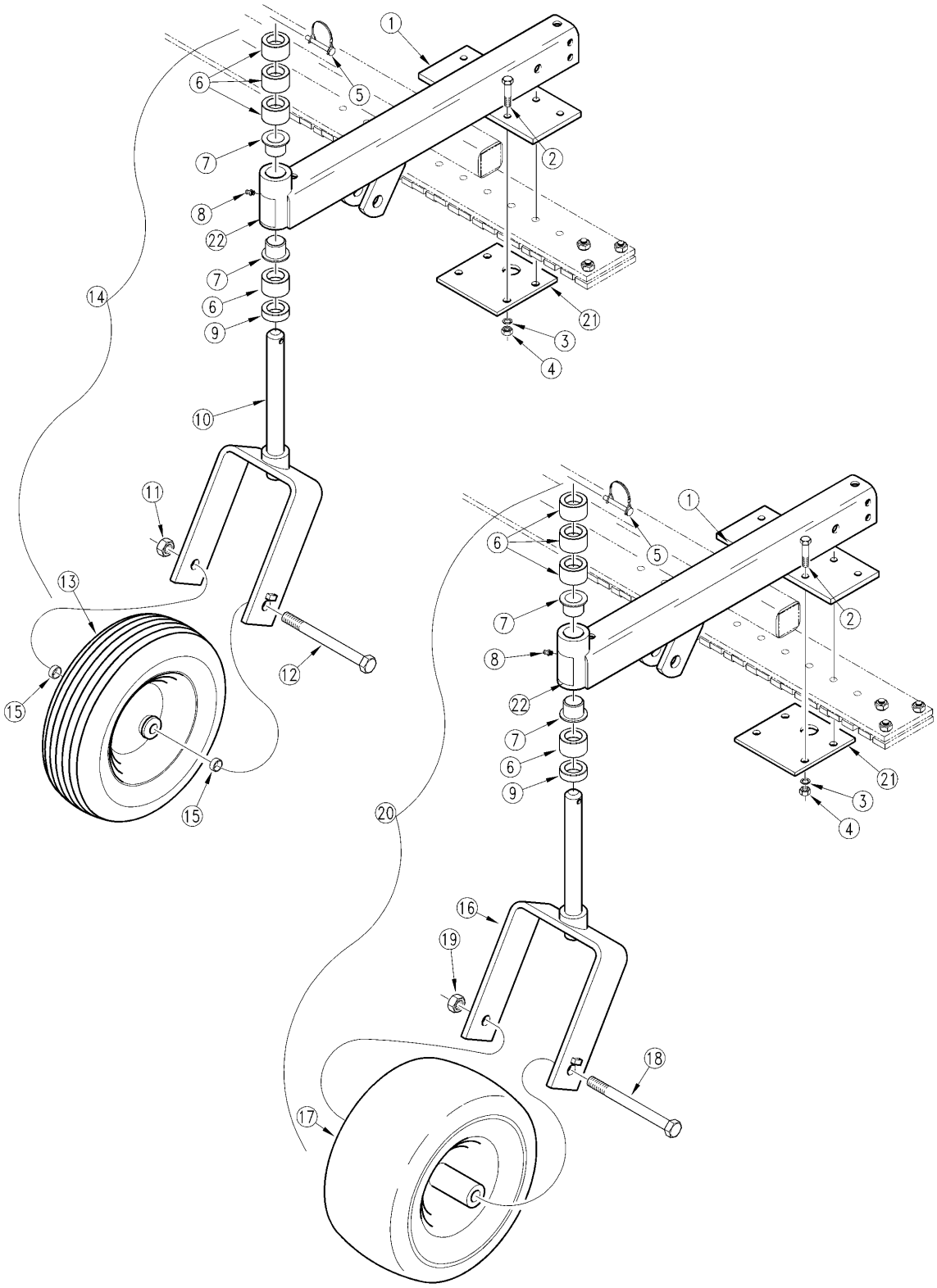

15190

Gauge Wheel Dual (S/N 42979-)

Applies to LR1560, LR1572, LR1584, LR1596

Ref.	Part No.	Part Description	Comments	Revision
	dwg15190	Drawing Image Number		
	302-101A	DUAL GAUGE WHEELS-WIDE 90		
	302-103A	DUAL GAUGE WHEEL-NRW-90		
1.	302-202H	RAKE DUAL G.W. WELDMENT		Rev. 2
1.	302-094H	RPBY 302-202H		Rev 1; Use up stock
2.	802-216C	HHCS 3/8-16X2 3/4 GR5		
3.	804-060C	WASHER INT-EXT 3/8 PLT		
4.	803-014C	NUT HEX 3/8-16 PLT		
5.	805-065C	PIN WIRE RETAINING 1/4 X 1 3/4		
6.	827-002C	SPACER 1"		
7.	817-048C	SPINDLE BUSHING		
8.	800-001C	GREASE ZERK STRAIGHT 1/4-28		
9.	827-001C	SPACER 1/2"		
10.	302-095H	NARROW GW YOKE WELDMENT		
11.	803-094C	NUT 5/8-11 NYLON COLLAR THIN		
12.	802-262C	HHCS 5/8-11X7 GR5		
13.	814-041C	WHEEL & TIRE PNEU 4.10 X 6		Gauge wheel tires should be inflated to 25 PSI.
14.	302-104K	GW ASSY - NARROW		
15.	302-076D	WHEEL SPACER		
16.	302-096H	WIDE GW YOKE WELDMENT		
17.	814-053C	TIRE & WHL 13/6.50X6 W/3/4 BOR		
18.	802-072C	HHCS 3/4-10X9 1/2 GR5		
19.	803-025C	NUT HEX 3/4-10 PLT NYLOCK		
20.	302-102K	GW ASSY - WIDE		
21.	302-022D	LATCH MOUNT		
22.	818-335C	DECAL RED NARROW REFLECTOR		

Gauge Wheel Dual (S/N 42980+)

Applies to LR1560, LR1572, LR1584, LR1596

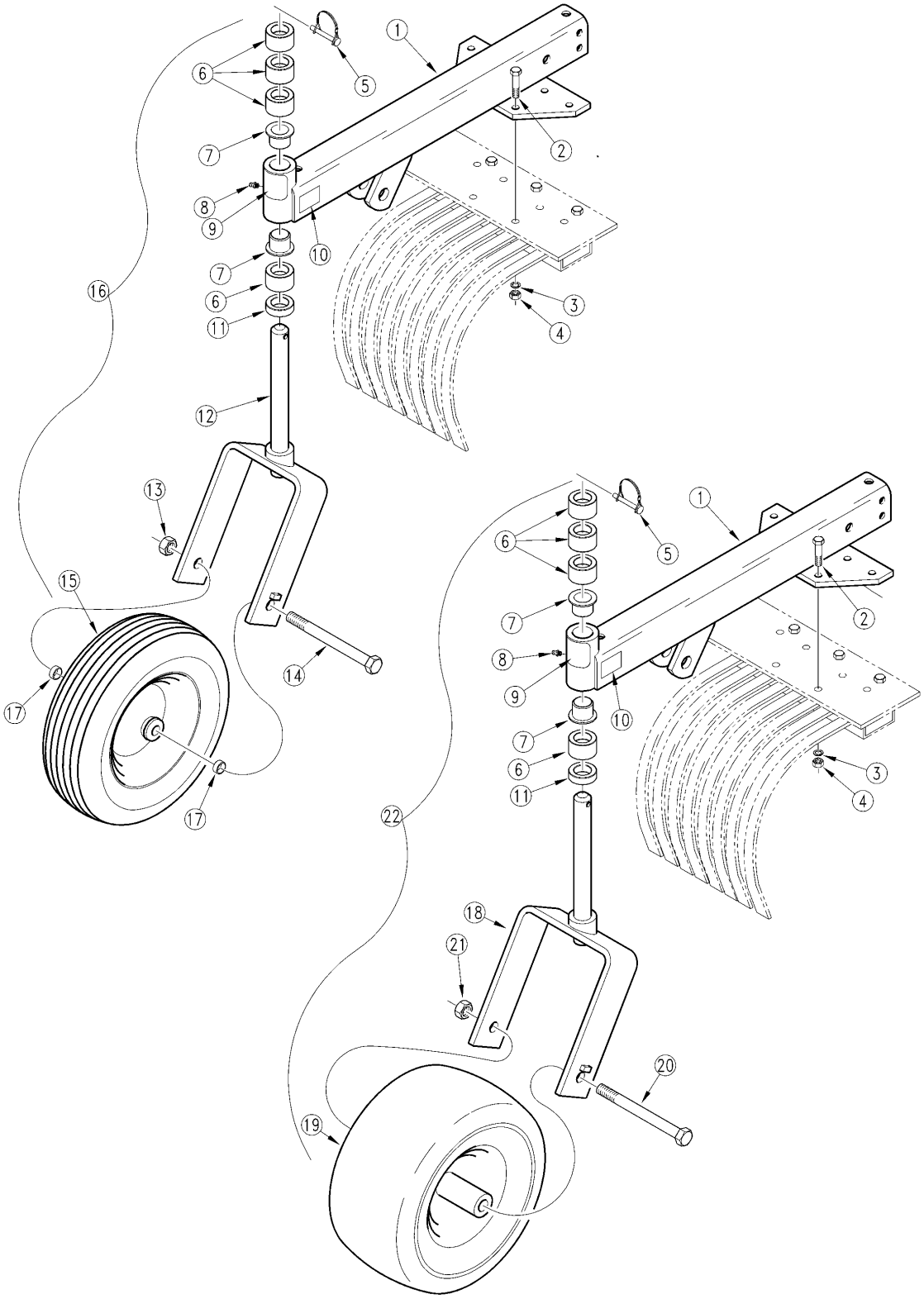

10325

Gauge Wheel Dual (S/N 42980+)

Applies to LR1560, LR1572, LR1584, LR1596

Ref.	Part No.	Part Description	Comments	Revision
	dwg10325	Drawing Image Number		
1.	302-202H	RAKE DUAL G.W. WELDMENT		Rev. 2
1.	302-094H	RPBY 302-202H		Rev 1; Use up stock
2.	802-216C	HHCS 3/8-16X2 3/4 GR5		
3.	804-060C	WASHER INT-EXT 3/8 PLT		
4.	803-014C	NUT HEX 3/8-16 PLT		
5.	805-065C	PIN WIRE RETAINING 1/4 X 1 3/4		
6.	827-002C	SPACER 1"		
7.	817-048C	SPINDLE BUSHING		
8.	800-001C	GREASE ZERK STRAIGHT 1/4-28		
9.	818-335C	DECAL RED NARROW REFLECTOR		
10.	818-298C	DECAL GREASE 25HRS BLACK/WHITE		
11.	827-001C	SPACER 1/2"		
12.	302-095H	NARROW GW YOKE WELDMENT		
13.	803-094C	NUT 5/8-11 NYLON COLLAR THIN		
14.	802-262C	HHCS 5/8-11X7 GR5		
15.	814-041C	WHEEL & TIRE PNEU 4.10 X 6		Gauge wheel tires should be inflated to 25 PSI.
16.	302-176A	DUAL GAUGE WHEELS-NRW 91+		
17.	302-076D	WHEEL SPACER		
18.	302-096H	WIDE GW YOKE WELDMENT		
19.	814-053C	TIRE & WHL 13/6.50X6 W/3/4 BOR		
20.	802-072C	HHCS 3/4-10X9 1/2 GR5		
21.	803-025C	NUT HEX 3/4-10 PLT NYLOCK		
22.	302-174A	DUAL GAUGE WHEELS-WIDE 91+		

Gauge Wheel Tire (814-041C) 4" Wide

Applies to LR1560, LR1572, LR1584, LR1596

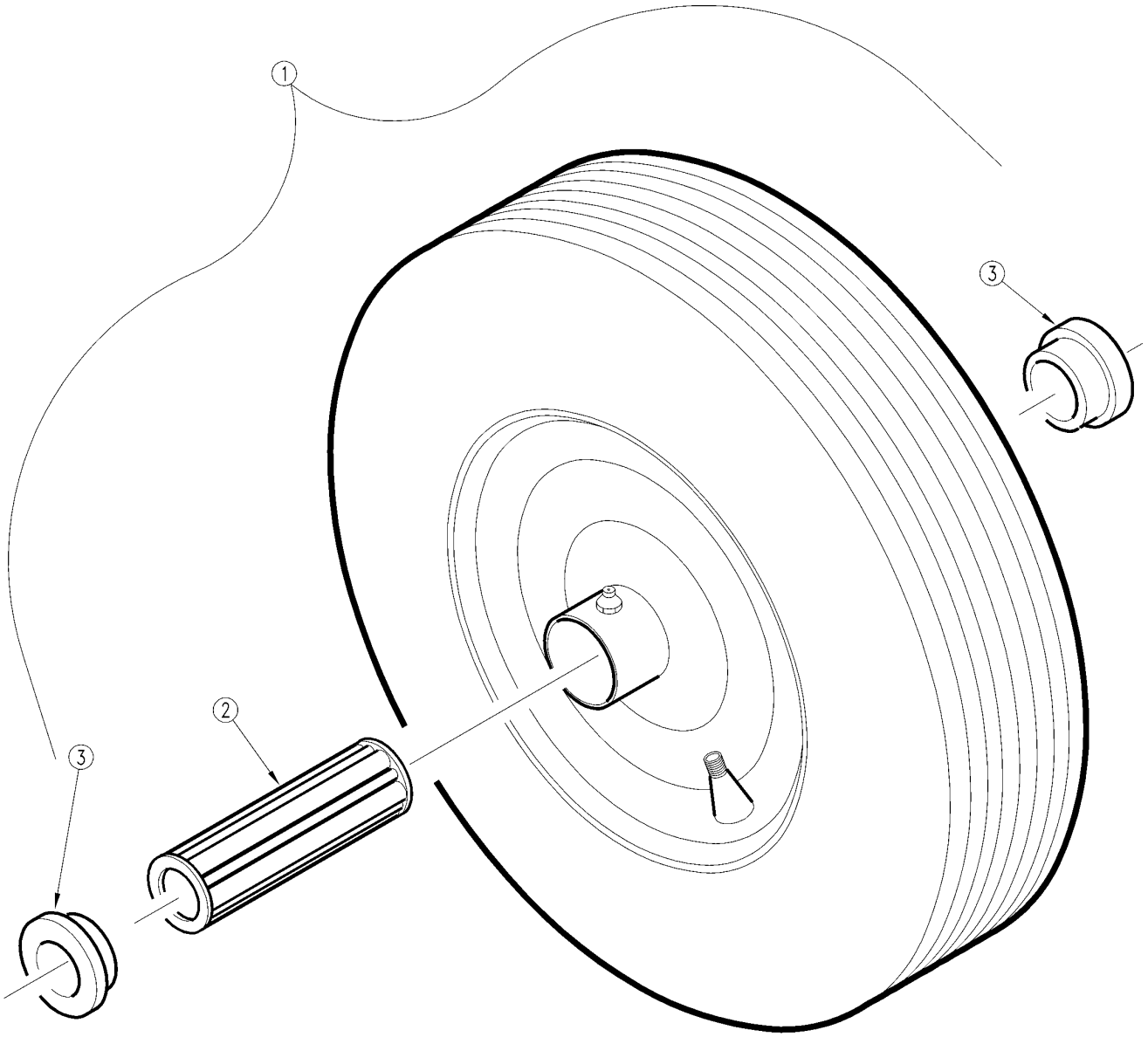

13625

Gauge Wheel Tire (814-041C) 4" Wide

Applies to LR1560, LR1572, LR1584, LR1596

Ref.	Part No.	Part Description	Comments	Revision
	dwg13625	Drawing Image Number		
1.	814-041C	WHEEL & TIRE PNEU 4.10 X 6		
2.	822-089C	BEARING 5/8X1 3/8X1 GLEASON587	two required	
2.	53-181	TILDEN BRG 5/8IDX1 3/8ODX2 1/2	one required	
3.	890-173C	END CAP GLEASON 4206		
3.	53-167	TILDEN RTNR 5/8IDX1 3/8ODX1/4L		

Gauge Wheel Tire (814-053C)

Applies to LR1560, LR1572, LR1584, LR1596

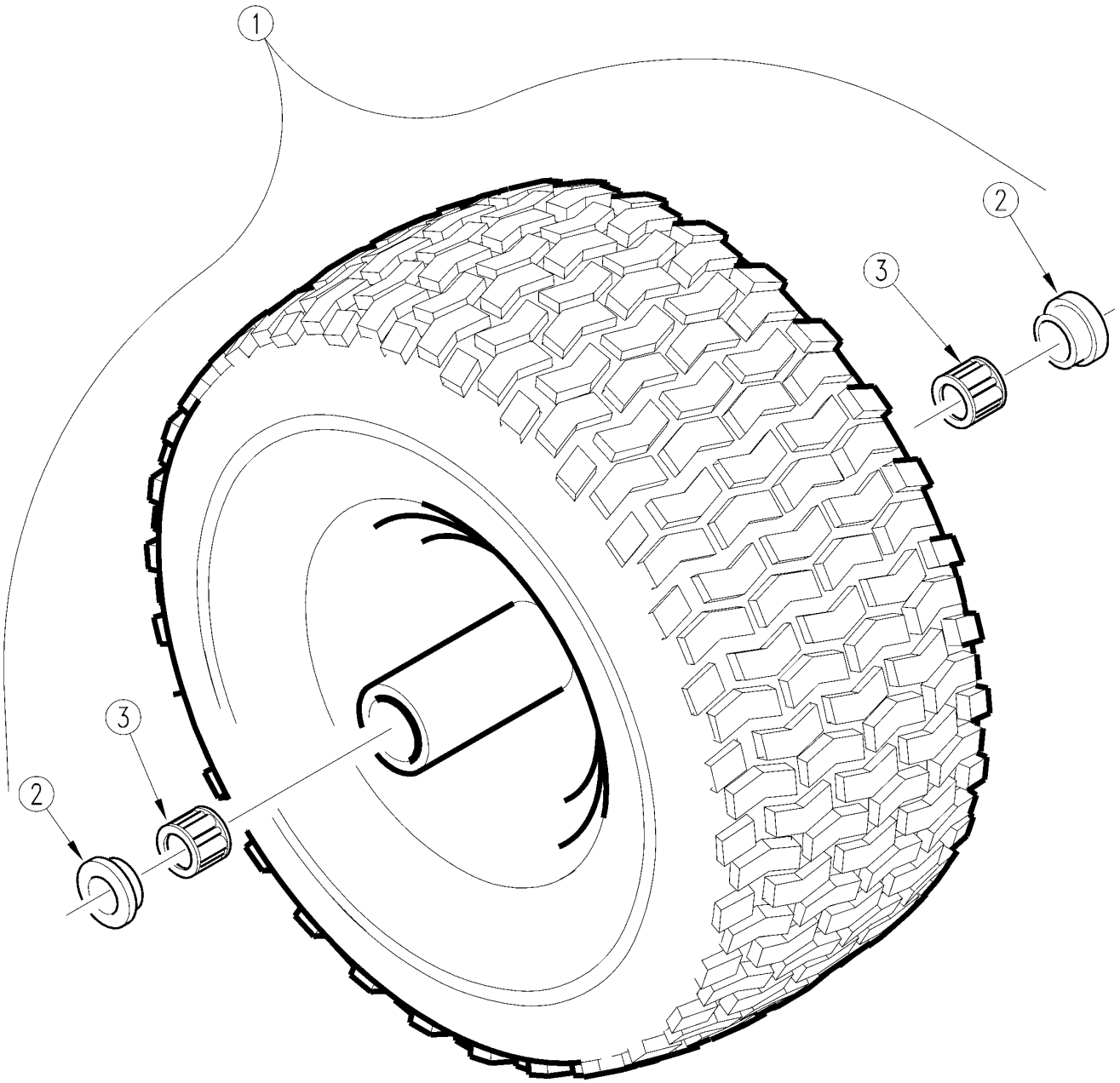

19042

Gauge Wheel Tire (814-053C)

Applies to LR1560, LR1572, LR1584, LR1596

Ref.	Part No.	Part Description	Comments	Revision
	dwg19042	Drawing Image Number		
1.	814-053C	TIRE & WHL 13/6.50X6 W/3/4 BOR		
2.	53-164	TILDEN RTNR 3/4IDX1 3/8ODX1/4L		
3.	53-189	TILDEN BRG 3/4ID1.34ODX15/16L		

Frame and Rake (S/N 42980+)

Applies to LR2572, LR2584, LR2596

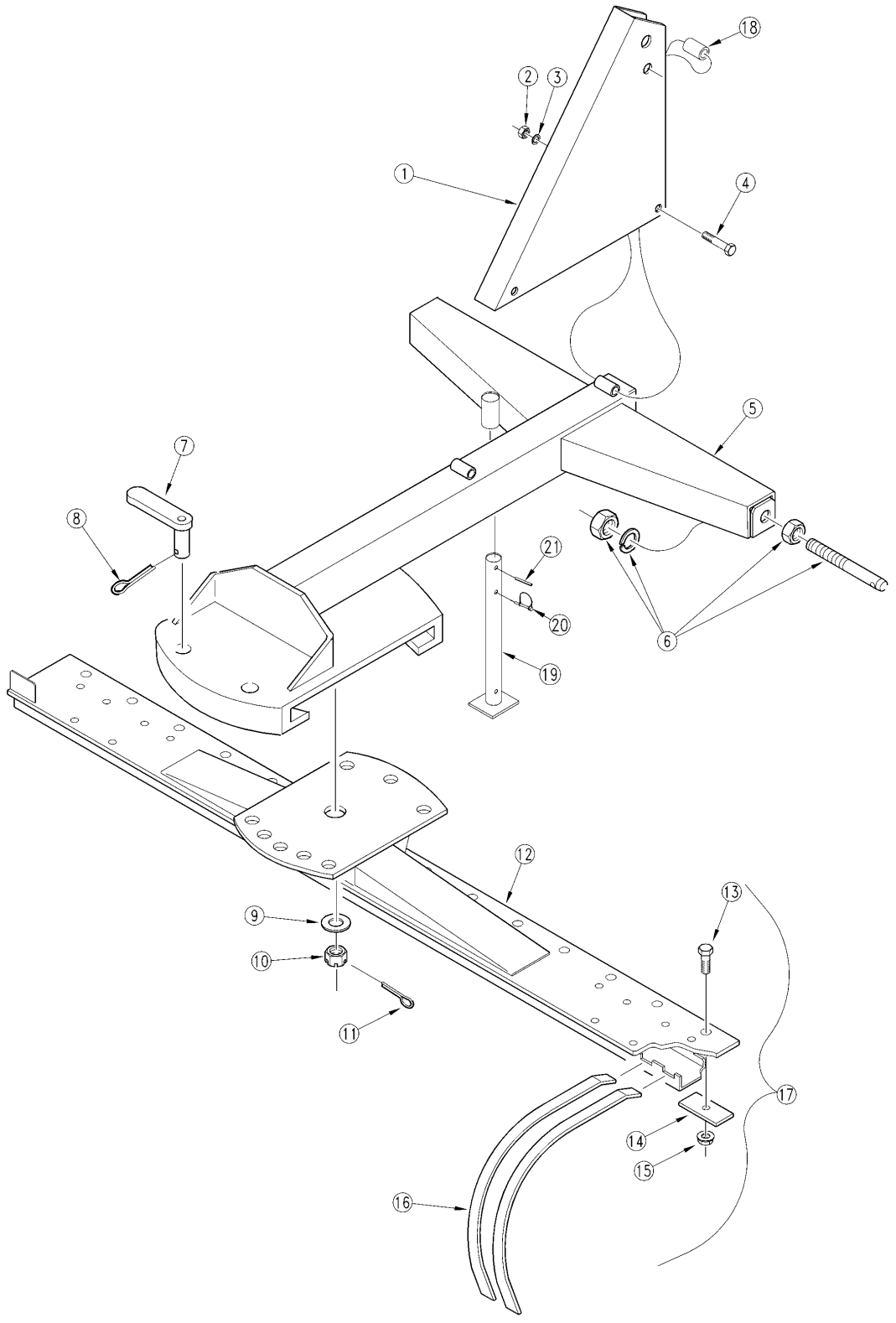

10318

Frame and Rake (S/N 42980+)

Applies to LR2572, LR2584, LR2596

Ref.	Part No.	Part Description	Comments	Revision
	dwg10318	Drawing Image Number		
	300-066A	25 SERIES FRAME ASSEMBLY	Includes one of items 4; 8; 10 through 15 and part no. 300-113B	
	300-113B	25RB & RAKE HARDWARE BAG	Includes two of items 5; 6; 7 and 9	
1.	300-196D	25 SERIES UPPER HITCH		Rev. 2
1.	300-196D82	25 SERIES UPPER HITCH ORANGE		
1.	300-062H	RPBY 300-196D		Rev 1; Use up stock
2.	803-021C	NUT HEX 5/8-11 PLT		
3.	804-022C	WASHER LOCK SPRING 5/8 PLT		
4.	802-162C	HHCS 5/8-11X3 1/2 GR5		
5.	300-061H	25 SERIES BLADE & RAKE FRAME		
5.	300-061H82	25 BLADE/RAKE FRAME ORANGE		
6.	805-111C	PIN DRAW 7/8 X 5		
7.	805-203C	PIN 1 1/8OD X2 1/8 USBL W/HNDL		Rev. 2
7.	300-013H	RPBY 805-203C		Rev 1; Use up stock
8.	805-032C	PIN HAIR COTTER .148 WIRE		
9.	804-028C	WASHER FLAT 1 USS		
10.	803-095C	NUT HEX SLOTTED 1-14		
11.	805-017C	PIN COTTER 3/16 X 1 3/4 PLT		
12.	302-160H	LR25/3572 RAKE MOUNT WELDM'T		
12.	302-161H	LR25/3584 RAKE MOUNT WELDM'T		
12.	302-162H	LR25/3596 RAKE MOUNT WELDM'T		
13.	802-022C	HHCS 3/8-16X1 1/2 GR5		
14.	302-130D	RAKE TINE CLIP		
15.	803-171C	MAC-LOK 3/8-16 SUPER FLANGE		
16.	820-037C	RAKE TOOTH 1	LR2572 36 Total, LR2584 42 Total & LR2596 48 Total	
17.	302-167A	LR25/3572 RAKE ASS'Y		
17.	302-168A	LR25/3584 RAKE ASS'Y		
17.	302-169A	LR25/3596 RAKE ASS'Y		
18.	308-339D	FLOATING TOP LINK SPACER TUB	Optional Quick Hitch Spacer	
19.	300-171H	SUPPORT STAND LR & RB35/25/15	S/N 476724+	
20.	805-065C	PIN WIRE RETAINING 1/4 X 1 3/4	S/N 476724+	
21.	805-161C	PIN ROLL 3/8 X 1 3/4 LG PLT	S/N 476724+	

Frame and Rake (SN 42979-)

Applies to LR2572, LR2584, LR2596

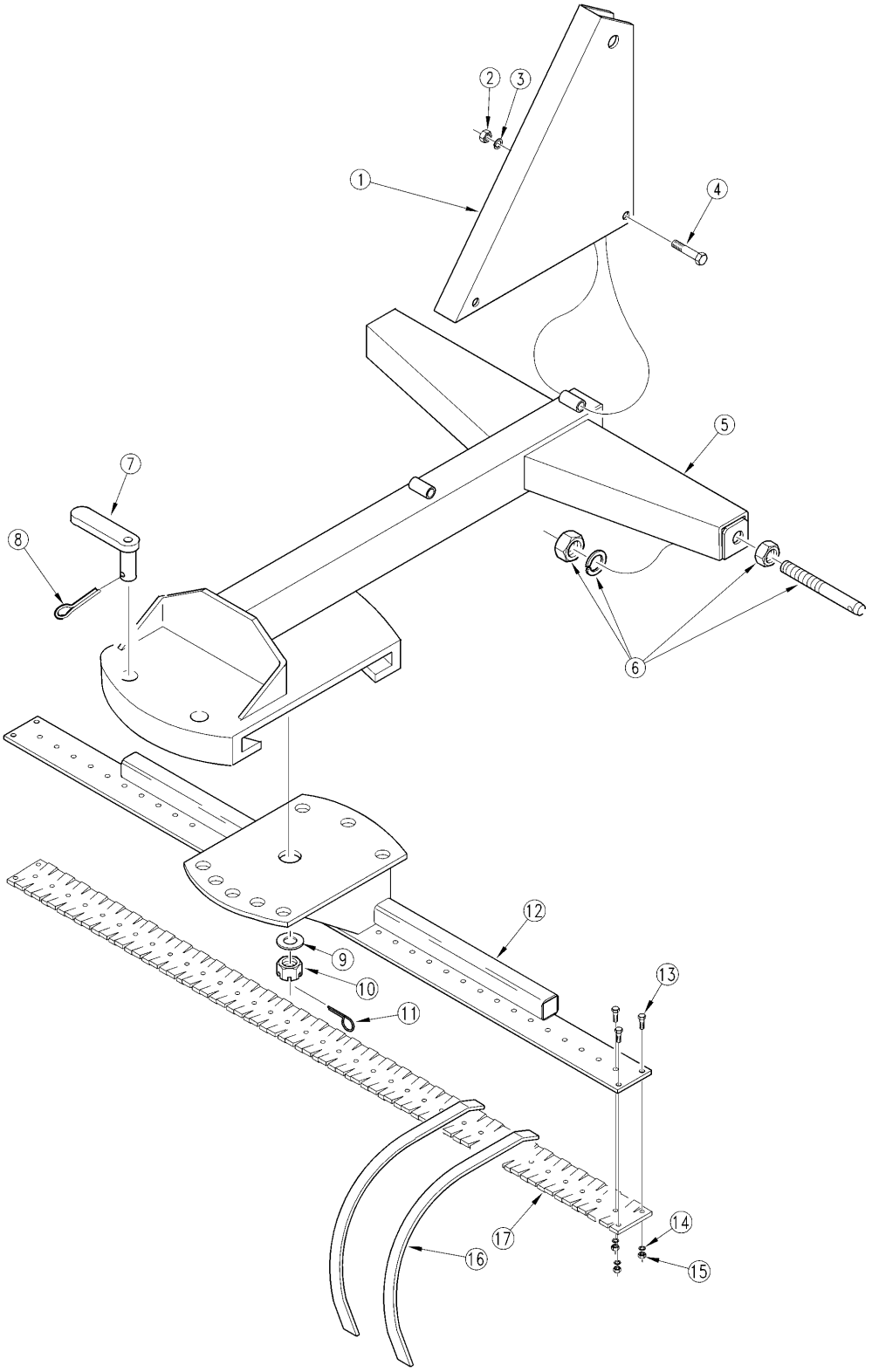

15192

Frame and Rake (SN 42979-)

Applies to LR2572, LR2584, LR2596

Ref.	Part No.	Part Description	Comments	Revision
	dwg15192	Drawing Image Number		
	300-066A	25 SERIES FRAME ASSEMBLY	Includes items 1 through 11	
	302-167A	LR25/3572 RAKE ASS'Y		Rev. 2
	302-121A	RPBY 302-167A	Includes items 12 through 17	Rev 1; Use up stock
	302-168A	LR25/3584 RAKE ASS'Y		Rev. 2
	302-122A	RPBY 302-168A	Includes items 12 through 17	Rev 1; Use up stock
	302-169A	LR25/3596 RAKE ASS'Y		Rev. 2
	302-123A	RPBY 302-169A	Includes items 12 through 17	Rev 1; Use up stock
1.	300-196D	25 SERIES UPPER HITCH		Rev. 2
1.	300-062H	RPBY 300-196D		Rev 1; Use up stock
2.	803-021C	NUT HEX 5/8-11 PLT		
3.	804-022C	WASHER LOCK SPRING 5/8 PLT		
4.	802-162C	HHCS 5/8-11X3 1/2 GR5		
5.	300-061H	25 SERIES BLADE & RAKE FRAME		
6.	805-111C	PIN DRAW 7/8 X 5		
7.	805-203C	PIN 1 1/8OD X2 1/8 USBL W/HNDL		Rev. 2
7.	300-013H	RPBY 805-203C		Rev 1; Use up stock
8.	805-032C	PIN HAIR COTTER .148 WIRE		
9.	804-028C	WASHER FLAT 1 USS		
10.	803-095C	NUT HEX SLOTTED 1-14		
11.	805-017C	PIN COTTER 3/16 X 1 3/4 PLT		
12.	302-118H	25 & 35 SERIES - 6' RAKE MOUNT		
12.	302-119H	25 & 35 SERIES - 7' RAKE MOUNT		
12.	302-120H	25 & 35 SERIES - 8' RAKE MOUNT		
13.	802-022C	HHCS 3/8-16X1 1/2 GR5		
14.	804-060C	WASHER INT-EXT 3/8 PLT		
15.	803-014C	NUT HEX 3/8-16 PLT		
16.	820-037C	RAKE TOOTH 1	LR2572 36 Total, LR2584 42 Total & LR2596 48 Total	
17.	302-008D	6' RAKE LOWER MOUNTING PLATE		
17.	302-066D	7' LOWER MOUNTING PLATE		
17.	302-014D	8' RAKE LOWER MOUNTING PLATE		

Decal Placement (S/N 42979-)

Applies to LR2572, LR2584, LR2596

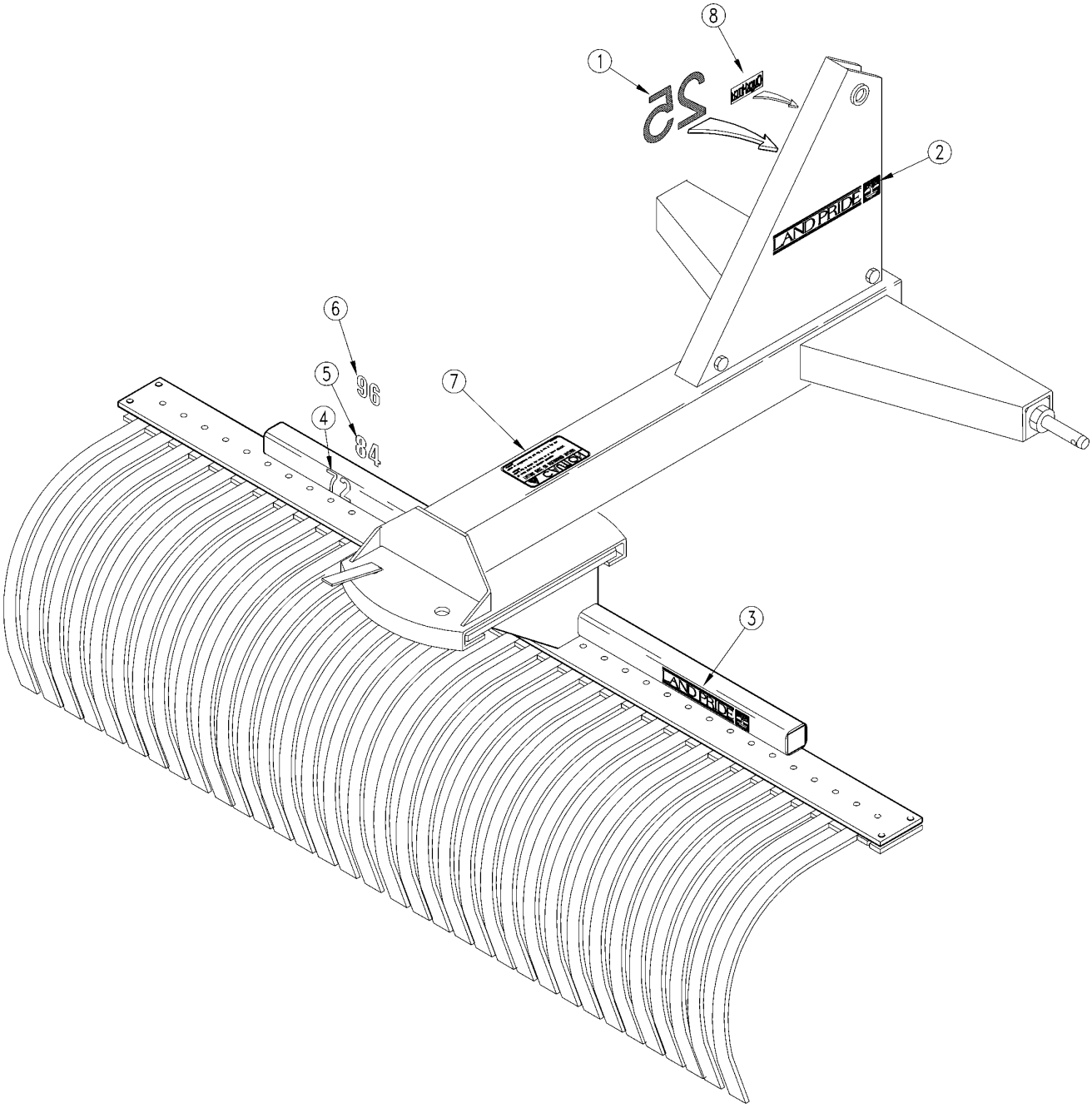

15194

Decal Placement (S/N 42979-)

Applies to LR2572, LR2584, LR2596

Ref.	Part No.	Part Description	Comments	Revision
	Dwg 15194	Drawing Image Number		
1.	818-085C	N/A	Obsolete	
2.	818-164C	LP LOGO SMALL GREEN		
3.	818-165C	LP LOGO SMALL BUCKSKIN		
4.	818-154C	DECAL 72 LP SMALL BUCKSKIN	Obsolete	
5.	818-155C	DECAL 84 LP SMALL BUCKSKIN		
6.	818-156C	DECAL 96 LP SMALL BUCKSKIN		
7.	818-202C	DECAL CAUTION FALL MBOARD/RAKE		
8.	838-517C	DECAL QUICK HITCH SYSTEM		

Decal Placement (S/N 42980+)

Applies to LR2572, LR2584, LR2596

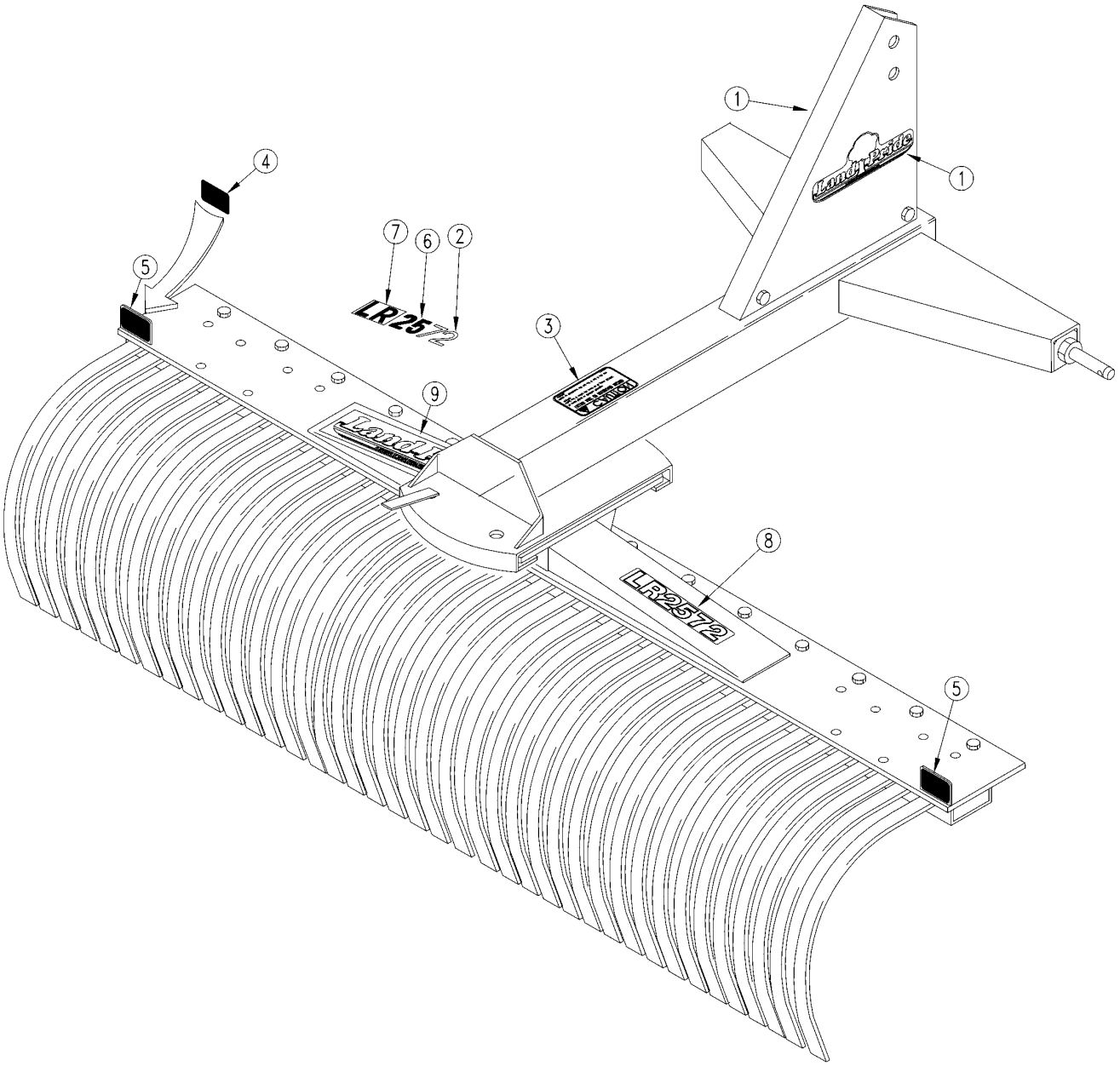

17574

Decal Placement (S/N 42980+)

Applies to LR2572, LR2584, LR2596

Ref.	Part No.	Part Description	Comments	Revision
	Dwg 17574	Drawing Image Number		
	302-179A	LR2572 DECAL PACKAGE	Includes items 1 through 8	
	302-180A	LR2584 DECAL PACKAGE	Includes items 1 through 8	
	302-181A	LR2596 DECAL PACKAGE	Includes items 1 through 8	
1.	818-891C	RPBY 838-962C	(S/N 252303+) Beige Unit	Rev. 2 not compat. w/Rev. 1.
1.	838-962C	DECAL LP 13" W/TREE BROWN/GOLD	Orange Unit	
2.	818-109C	DECAL 72 LP - BUCKSKIN	(S/N 252302-)	
2.	818-111C	DECAL 84 LP - BUCKSKIN	(S/N 252302-)	
2.	818-112C	DECAL 96 LP - BUCKSKIN	(S/N 252302-)	
3.	818-202C	DECAL CAUTION FALL MBOARD/RAKE		
4.	818-229C	DECAL AMBER REFLECTOR	LR2596 ONLY	
5.	818-230C	DECAL RED REFLECTOR		
6.	818-102C	DECAL 25 SERIES LP - BUCKSKIN	(S/N 252302-)	
7.	818-735C	N/A	OBSOLETE	
8.	818-998C	DECAL LR2572-BEIGE	(S/N 252303+)	
8.	818-999C	DECAL LR2584-BEIGE	(S/N 252303+)	
8.	838-001C	DECAL LR2596-BEIGE	(S/N 252303+)	
9.	818-898C	RPBY 848-159C	(S/N 252303+)	
9.	848-159C	DECAL LANDPRIDE 10" BROWN/GOLD		

Land Pride Touch-up Paints

Applies to LR2572, LR2584, LR2596

No diagram associated with this Parts List

Land Pride Touch-up Paints

Applies to LR2572, LR2584, LR2596

Ref.	Part No.	Part Description	Comments	Revision
1.	821-011C	LP BEIGE SPRAY CAN	Spray can	
1.	821-070C	GLOSS BLACK SPRAY CAN	Spray can	
1.	821-054C	MED. RED SPRAY TRCK/CTR	Spray can	
1.	821-058C	GREEN SPRAY CUTTERS	Spray can	
1.	821-066C	ORANGE SPRAY CAN	Spray can	
1.	821-067C	BLUE SPRAY CAN	Spray can	
1.	821-080C	PAINT ALUMINUM/ZINC SPRAY CAN	Spray can	
2.	821-011CTU	LP BEIGE TOUCH-UP 5OZ	Touch-up bottle with brush	
2.	821-070CTU	GLOSS BLACK TOUCH-UP 5OZ	Touch-up bottle with brush	
2.	821-054CTU	MED RED TOUCH-UP 5OZ	Touch-up bottle with brush	
2.	821-058CTU	GREEN TOUCH-UP 5OZ	Touch-up bottle with brush	
2.	821-066CTU	ORANGE TOUCH-UP 5OZ	Touch-up bottle with brush	
2.	821-067CTU	BLUE TOUCH-UP 5OZ	Touch-up bottle with brush	
2.	821-080CTU	PAINT ALUMINUM/ZINC TOUCH UP	Touch-up bottle with brush	
3.	821-011CQT	LP BEIGE QUART	Quart can	
3.	821-070CQT	GLOSS BLACK QUART	Quart can	
3.	821-054CQT	MED RED QUART	Quart can	
3.	821-058CQT	GREEN QUART	Quart can	
3.	821-066CQT	ORANGE QUART	Quart can	
3.	821-067CQT	BLUE QUART	Quart can	
3.	821-080CQT	PAINT ALUMINUM/ZINC QUART	Quart can	
4.	821-011CGL	LP BEIGE GALLON	Gallon can	
4.	821-070CGL	GLOSS BLACK GALLON	Gallon can	
4.	821-054CGL	MED RED GALLON	Gallon can	
4.	821-058CGL	GREEN GALLON	Gallon can	
4.	821-066CGL	ORANGE GALLON	Gallon can	
4.	821-067CGL	BLUE GALLON	Gallon can	
4.	821-080CGL	PAINT ALUMINUM/ZINC GALLON	Gallon can	

Flip Down Grader Blade LR25

Applies to LR2572, LR2584, LR2596

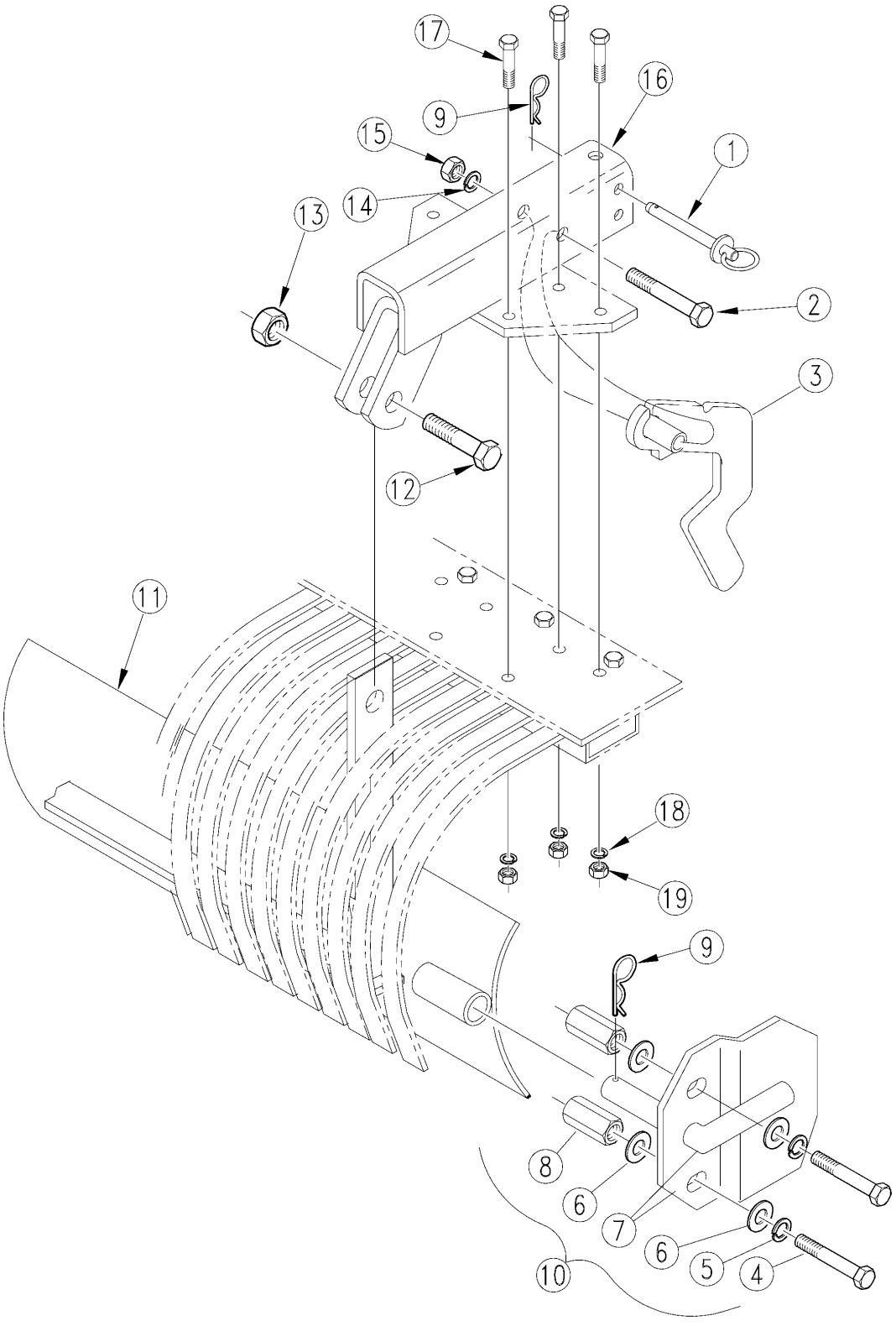

20983

Flip Down Grader Blade LR25

Applies to LR2572, LR2584, LR2596

Ref.	Part No.	Part Description	Comments	Revision
	dwg20983	Drawing Image Number		
	302-152A	FLIP DOWN GRADER BLADE ASSY 5'	Consist of items 1 - 15	
	302-105A	6' GRADER BLADE ASY	Consist of items 1 - 15	
	302-106A	7' GRADER BLADE ASY	Consist of items 1 - 15	
	302-107A	8' GRADER BLADE ASY	Consist of items 1 - 15	
	302-260A	GB MOUNT LESS DUAL GW	Consist of items 16 - 19	
1.	805-001C	PIN BENT 3/8 X 3 USABLE LW/PIN		
2.	802-039C	HHCS 1/2-13X3 GR5		
3.	302-097H	BLADE LOCK HANDLE WELDMENT		
4.	802-080C	HHCS 7/16-14X1 GR5		
5.	804-014C	WASHER LOCK 7/16 PLT		
6.	804-041C	WASHER FLAT 7/16 SAE PLT		
7.	302-017H	SIDE PLATE WELDMENT		
8.	803-067C	NUT HEX CPLR 7/16-14X1 3/4 PLT		
9.	805-032C	PIN HAIR COTTER .148 WIRE		
10.	302-124S	GRADER BLADE SIDE PLATE ASSY		
11.	302-145H	5' GRADER BLADE WELDMENT		
11.	302-098H	6' GRADER BLADE WELDMENT		
11.	302-099H	7' GRADER BLADE WELDMENT		
11.	302-100H	8' GRADER BLADE WELDMENT		
12.	802-086C	HHCS 3/4-10X2 3/4 GR5		
13.	803-026C	NUT LOCK 3/4-10 PLT		
14.	804-015C	WASHER LOCK SPRING 1/2 PLT		
15.	803-020C	NUT HEX 1/2-13 PLT		
16.	302-204H	GRADER BLD MTG PULL TYPE		
17.	802-216C	HHCS 3/8-16X2 3/4 GR5		
18.	804-060C	WASHER INT-EXT 3/8 PLT		
19.	803-014C	NUT HEX 3/8-16 PLT		

Gauge Wheel Dual (S/N 42979-)

Applies to LR2572, LR2584, LR2596

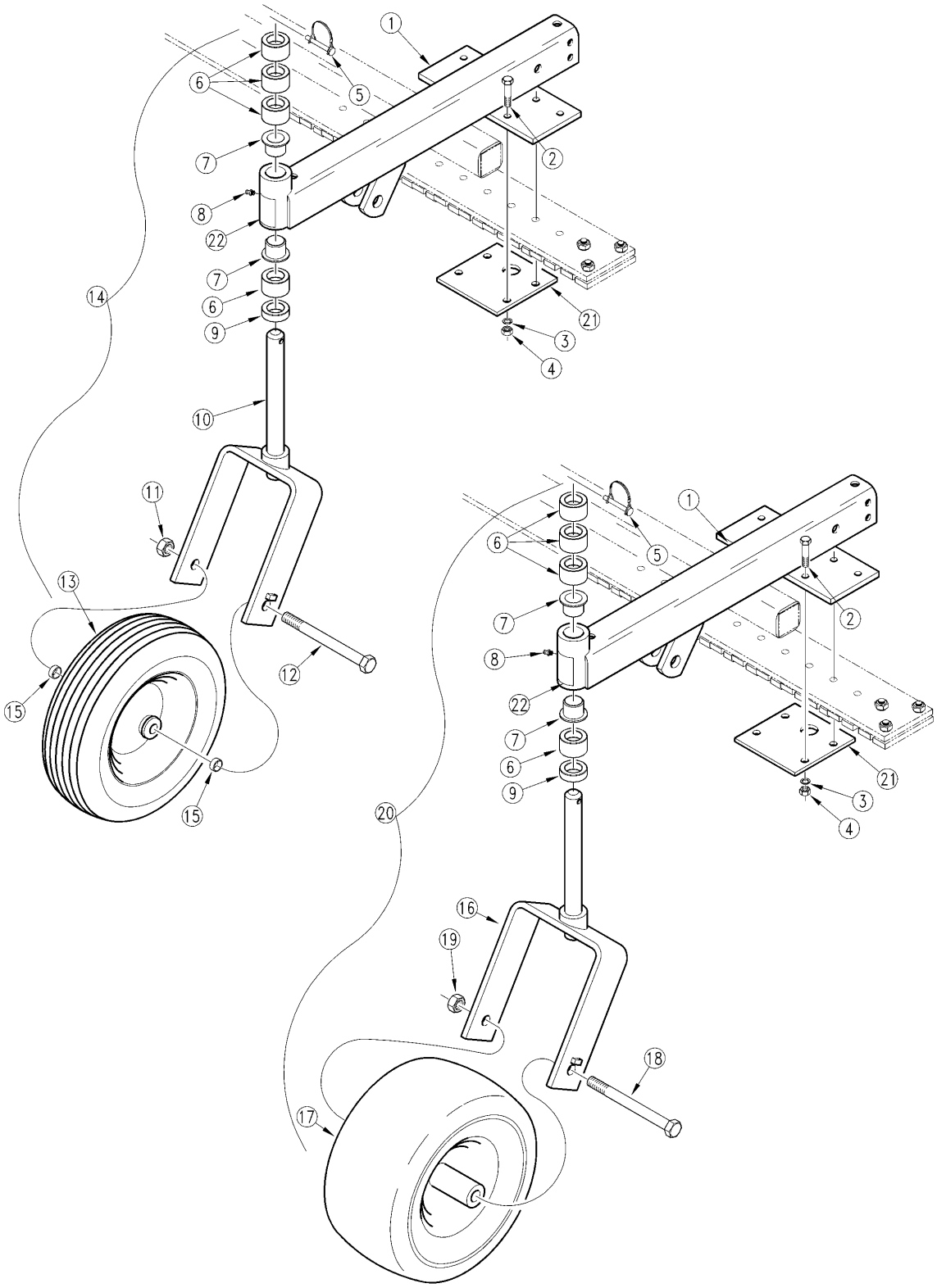

15190

Gauge Wheel Dual (S/N 42979-)

Applies to LR2572, LR2584, LR2596

Ref.	Part No.	Part Description	Comments	Revision
	dwg15190	Drawing Image Number		
	302-101A	DUAL GAUGE WHEELS-WIDE 90		
	302-103A	DUAL GAUGE WHEEL-NRW-90		
1.	302-202H	RAKE DUAL G.W. WELDMENT		Rev. 2
1.	302-094H	RPBY 302-202H		Rev 1; Use up stock
2.	802-216C	HHCS 3/8-16X2 3/4 GR5		
3.	804-060C	WASHER INT-EXT 3/8 PLT		
4.	803-014C	NUT HEX 3/8-16 PLT		
5.	805-065C	PIN WIRE RETAINING 1/4 X 1 3/4		
6.	827-002C	SPACER 1"		
7.	817-048C	SPINDLE BUSHING		
8.	800-001C	GREASE ZERK STRAIGHT 1/4-28		
9.	827-001C	SPACER 1/2"		
10.	302-095H	NARROW GW YOKE WELDMENT		
11.	803-094C	NUT 5/8-11 NYLON COLLAR THIN		
12.	802-262C	HHCS 5/8-11X7 GR5		
13.	814-041C	WHEEL & TIRE PNEU 4.10 X 6		Gauge wheel tires should be inflated to 25 PSI.
14.	302-104K	GW ASSY - NARROW		
15.	302-076D	WHEEL SPACER		
16.	302-096H	WIDE GW YOKE WELDMENT		
17.	814-053C	TIRE & WHL 13/6.50X6 W/3/4 BOR		
18.	802-072C	HHCS 3/4-10X9 1/2 GR5		
19.	803-025C	NUT HEX 3/4-10 PLT NYLOCK		
20.	302-102K	GW ASSY - WIDE		
21.	302-022D	LATCH MOUNT		
22.	818-335C	DECAL RED NARROW REFLECTOR		

Gauge Wheel Dual (S/N 42980+)

Applies to LR2572, LR2584, LR2596

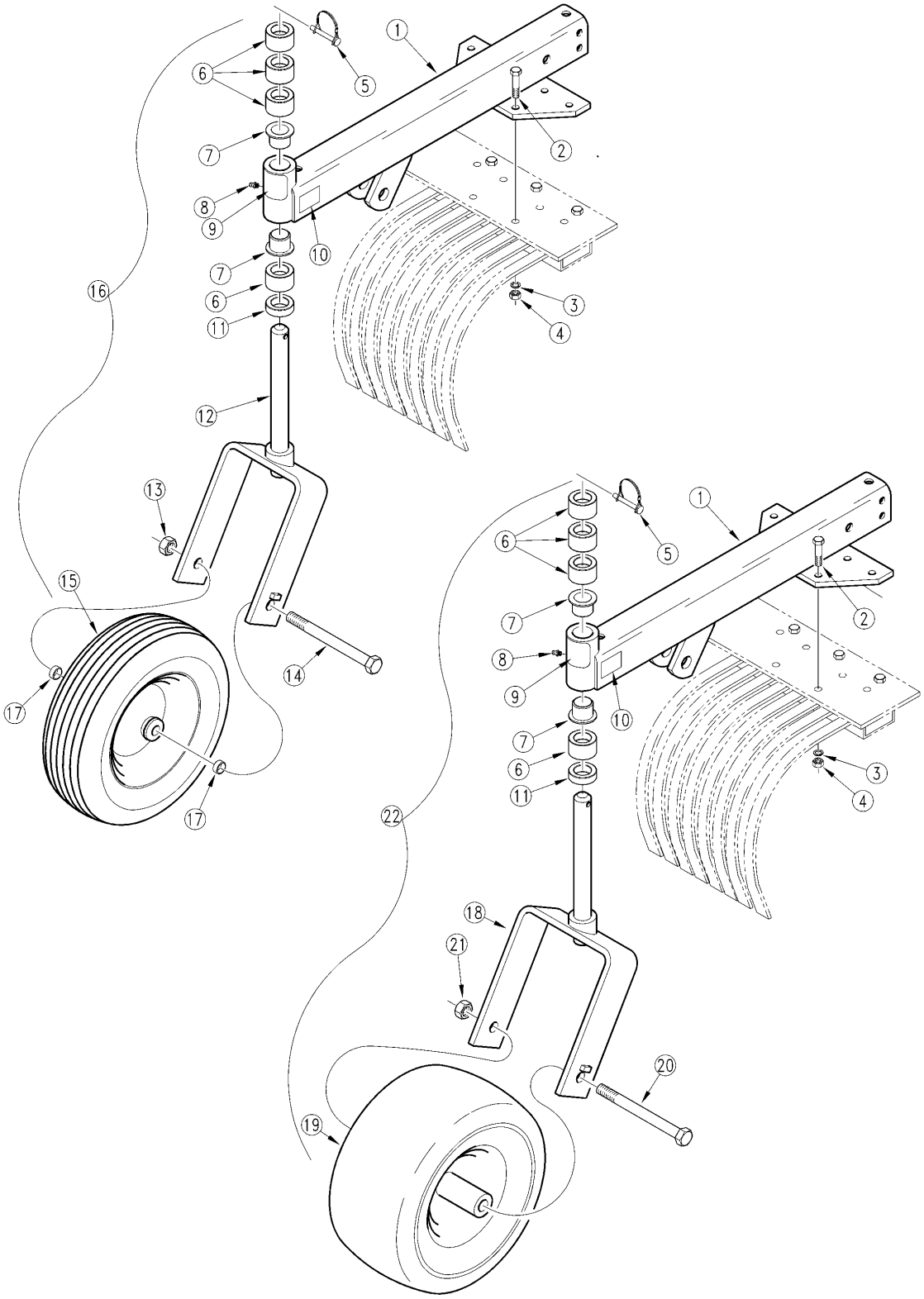

10325

Gauge Wheel Dual (S/N 42980+)

Applies to LR2572, LR2584, LR2596

Ref.	Part No.	Part Description	Comments	Revision
	dwg10325	Drawing Image Number		
1.	302-202H	RAKE DUAL G.W. WELDMENT		Rev. 2
1.	302-094H	RPBY 302-202H		Rev 1; Use up stock
2.	802-216C	HHCS 3/8-16X2 3/4 GR5		
3.	804-060C	WASHER INT-EXT 3/8 PLT		
4.	803-014C	NUT HEX 3/8-16 PLT		
5.	805-065C	PIN WIRE RETAINING 1/4 X 1 3/4		
6.	827-002C	SPACER 1"		
7.	817-048C	SPINDLE BUSHING		
8.	800-001C	GREASE ZERK STRAIGHT 1/4-28		
9.	818-335C	DECAL RED NARROW REFLECTOR		
10.	818-298C	DECAL GREASE 25HRS BLACK/WHITE		
11.	827-001C	SPACER 1/2"		
12.	302-095H	NARROW GW YOKE WELDMENT		
13.	803-094C	NUT 5/8-11 NYLON COLLAR THIN		
14.	802-262C	HHCS 5/8-11X7 GR5		
15.	814-041C	WHEEL & TIRE PNEU 4.10 X 6		Gauge wheel tires should be inflated to 25 PSI.
16.	302-176A	DUAL GAUGE WHEELS-NRW 91+		
17.	302-076D	WHEEL SPACER		
18.	302-096H	WIDE GW YOKE WELDMENT		
19.	814-053C	TIRE & WHL 13/6.50X6 W/3/4 BOR		
20.	802-072C	HHCS 3/4-10X9 1/2 GR5		
21.	803-025C	NUT HEX 3/4-10 PLT NYLOCK		
22.	302-174A	DUAL GAUGE WHEELS-WIDE 91+		

Gauge Wheel Single

Applies to LR2572, LR2584, LR2596

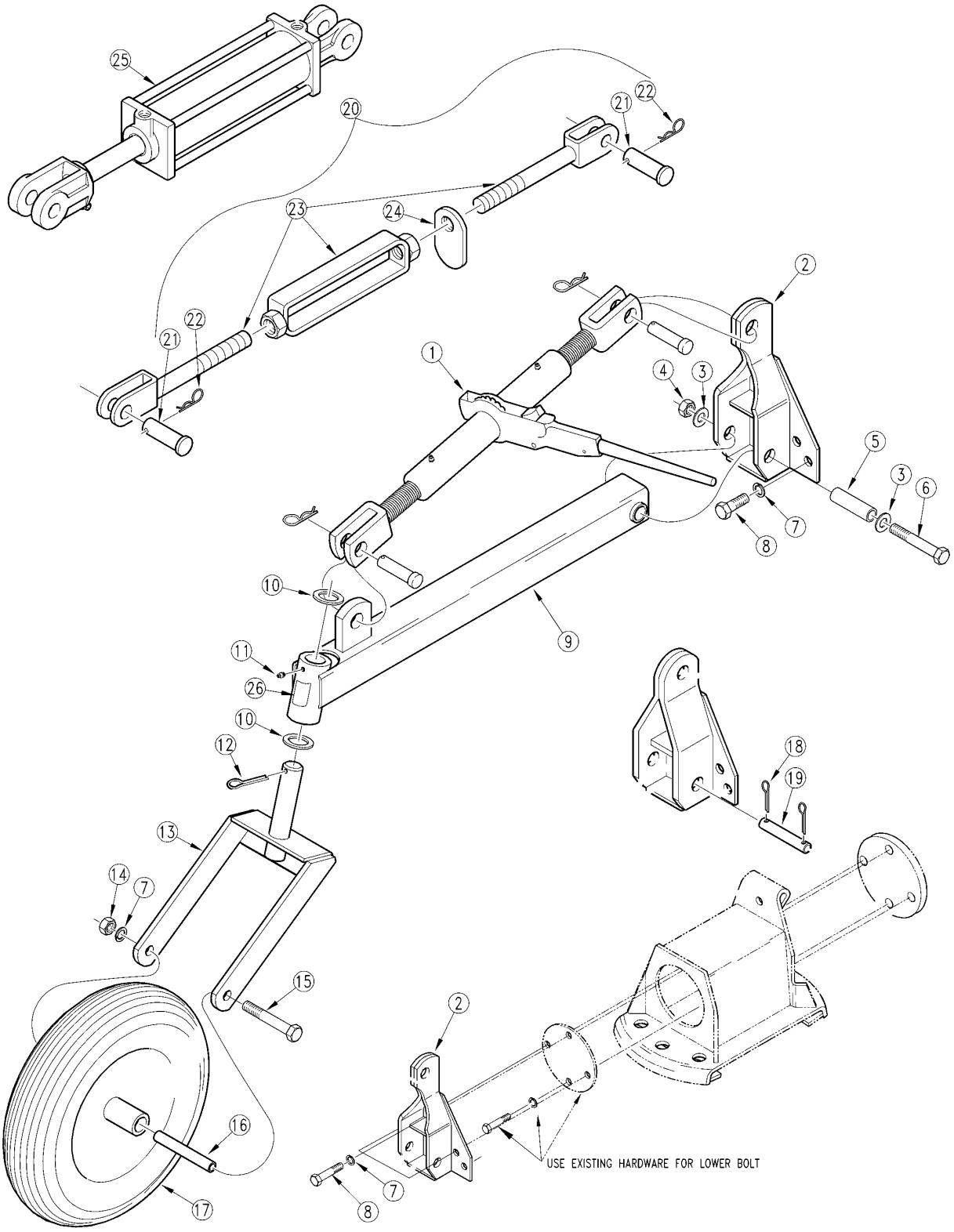

16952

Gauge Wheel Single

Applies to LR2572, LR2584, LR2596

Ref.	Part No.	Part Description	Comments	Revision
	dwg16952	Drawing Image Number		
	300-014A	25 & 35 BLADE & RAKE SINGLE GW	Includes items 1 through 18	
1.	890-177C	RATCHET JACK - HEAVY DUT		
2.	300-015H	GAUGE WHEEL MOUNT WELDMENT		
3.	804-021C	WASHER FLAT 5/8 SAE PLT		
4.	803-024C	NUT LOCK 5/8-11 PLT		
5.	300-375D	TB RD DOM. 7/8ODX11GWLX3 15/16		
6.	802-062C	HHCS 5/8-11X5 GR5		
7.	804-022C	WASHER LOCK SPRING 5/8 PLT		
8.	802-207C	HHCS 5/8-18X1 1/2 GR5		
9.	300-016H	ARM WELDMENT		
10.	804-062C	WASHER MACH 1.88 X 1.25 X 10GA		
11.	800-080C	GREASE ZERK 1/4-28 THD FORMING		
12.	805-105C	PIN COTTER 1/4 X 2 1/2 PLT		
13.	300-017H	YOKE WELDMENT		
14.	803-021C	NUT HEX 5/8-11 PLT		
15.	802-208C	HHCS 5/8-11X8 GR5		
16.	300-050D	SINGLE GAUGE WHEEL SLEEVE		
17.	814-039C	WHEEL & TIRE PNEU 4.8/4.00 X 8		
18.	805-104C	PIN COTTER 3/16 X 1 1/2 PLT	Replaced by items 3, 4, 6 & 7	
19.	300-042D	MOUNT PIN	Replaced by items 3, 4, 6 & 7	
20.	300-068K	TURNBUCKLE ASSEMBLY	Replaced by 890-177C item 1	
21.	805-090C	PIN CLEVIS 1 X 3 3/16 LG		
22.	805-088C	PIN, HAIR COTTER 3/16 WIRE DIA		
23.	300-067H	SINGLE GW TURNBUCKLE WELDMENT		
24.	300-057D	LOCK TAB		
25.	810-162C	CYL 3.5X8X1.25 ROD (TIE ROD)		
26.	818-335C	DECAL RED NARROW REFLECTOR		

Gauge Wheel Tire (814-041C)

Applies to LR2572, LR2584, LR2596

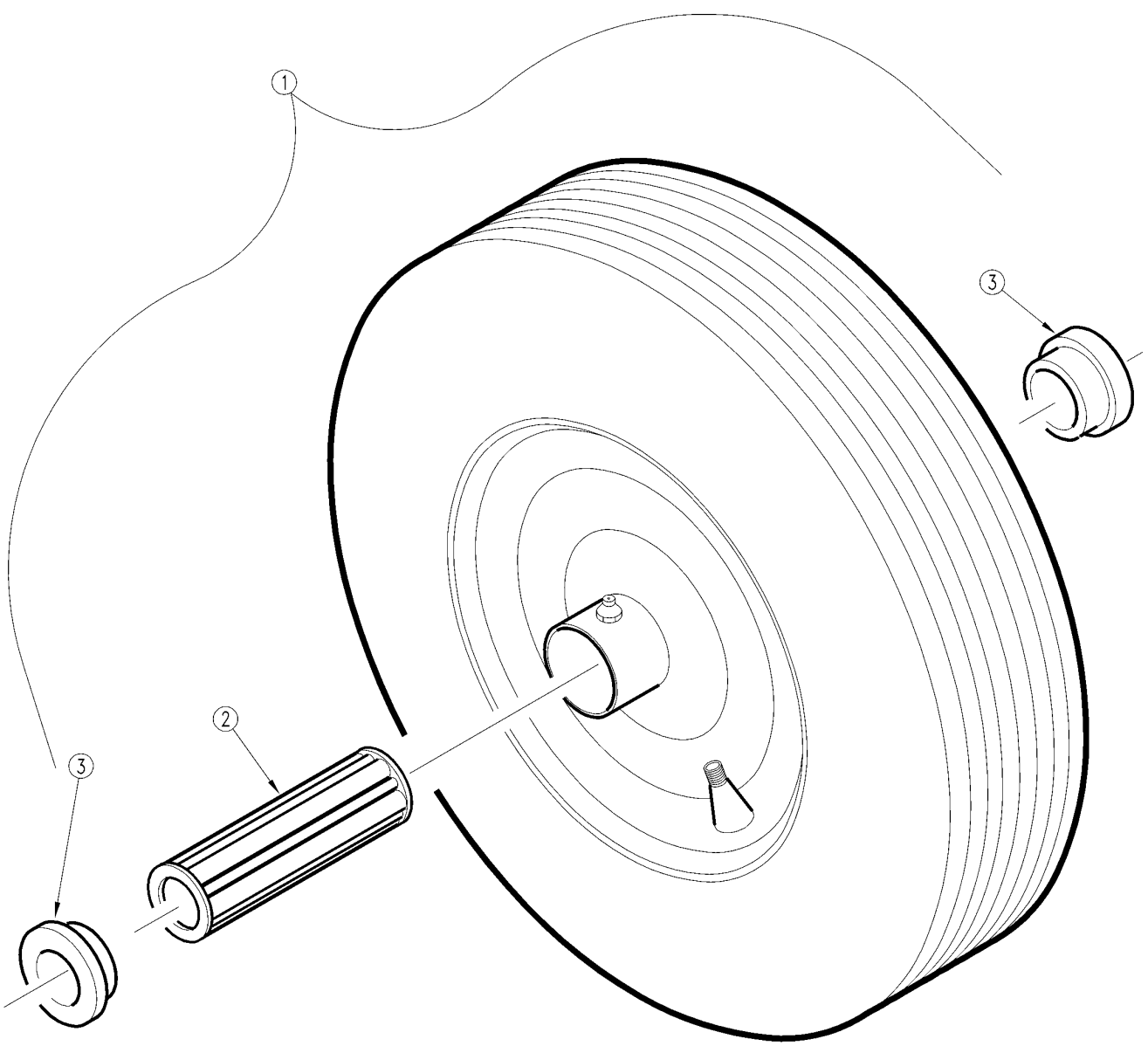

13625

Gauge Wheel Tire (814-041C)

Applies to LR2572, LR2584, LR2596

Ref.	Part No.	Part Description	Comments	Revision
	dwg13625	Drawing Image Number		
1.	814-041C	WHEEL & TIRE PNEU 4.10 X 6		
2.	822-089C	BEARING 5/8X1 3/8X1 GLEASON587	two required	
2.	53-181	TILDEN BRG 5/8IDX1 3/8ODX2 1/2	one required	
3.	890-173C	END CAP GLEASON 4206		
3.	53-167	TILDEN RTNR 5/8IDX1 3/8ODX1/4L		

Gauge Wheel Tire (814-053C)

Applies to LR2572, LR2584, LR2596

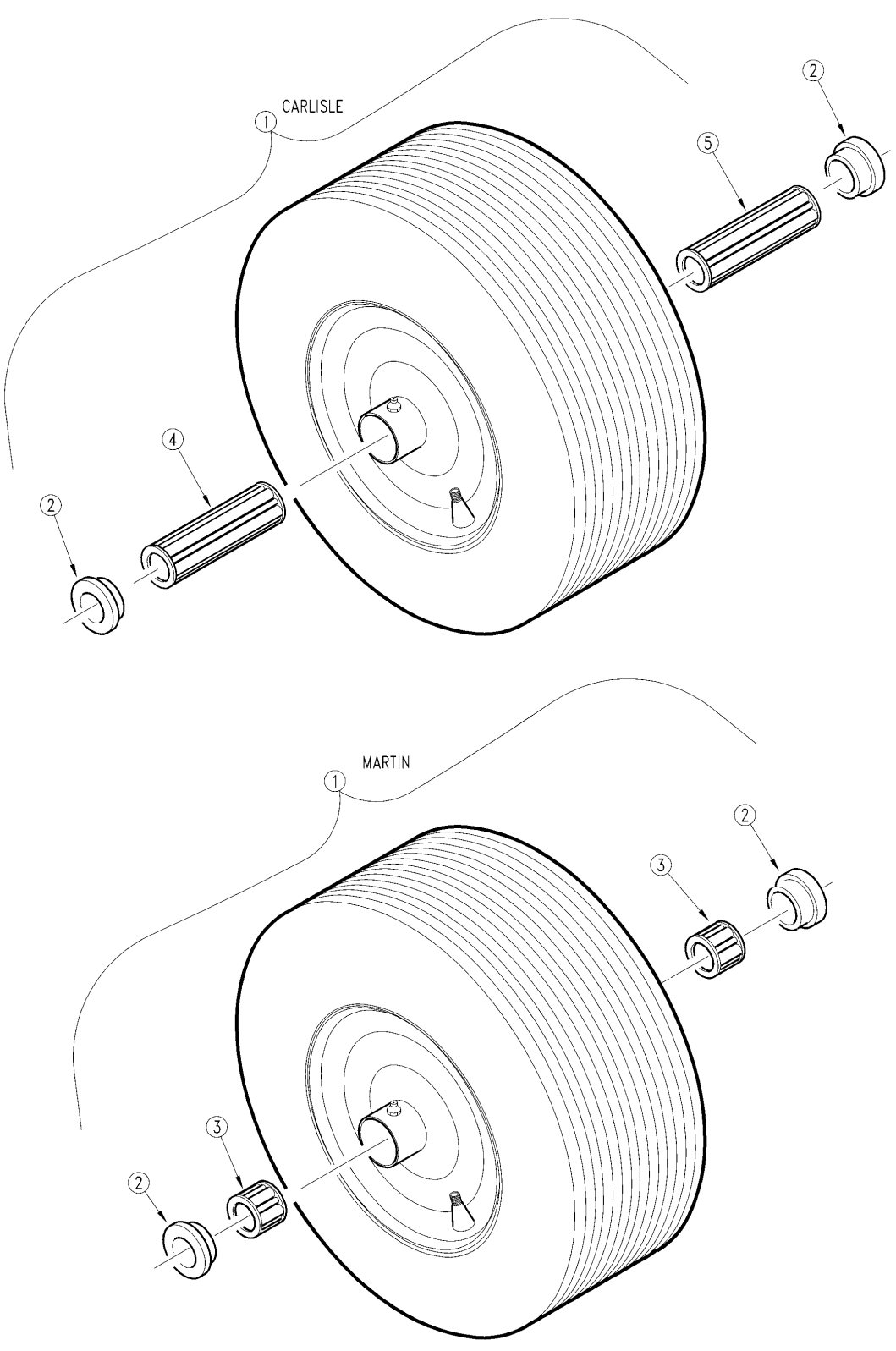

13627

Gauge Wheel Tire (814-053C)

Applies to LR2572, LR2584, LR2596

Ref.	Part No.	Part Description	Comments	Revision
	dwg13627	Drawing Image Number		
1.	814-053C	TIRE & WHL 13/6.50X6 W/3/4 BOR		
2.	53-164	TILDEN RTNR 3/4IDX1 3/8OD		
3.	53-189	TILDEN BRG 3/4ID1.34ODX15/16L		
4.	822-222C	BRG,.75X1.38X3.75L ROLLER		
5.	822-223C	BRG .75X1.38X3.00L ROLLER		

Hydraulic Cylinder (810-005C)

Applies to LR2572, LR2584, LR2596

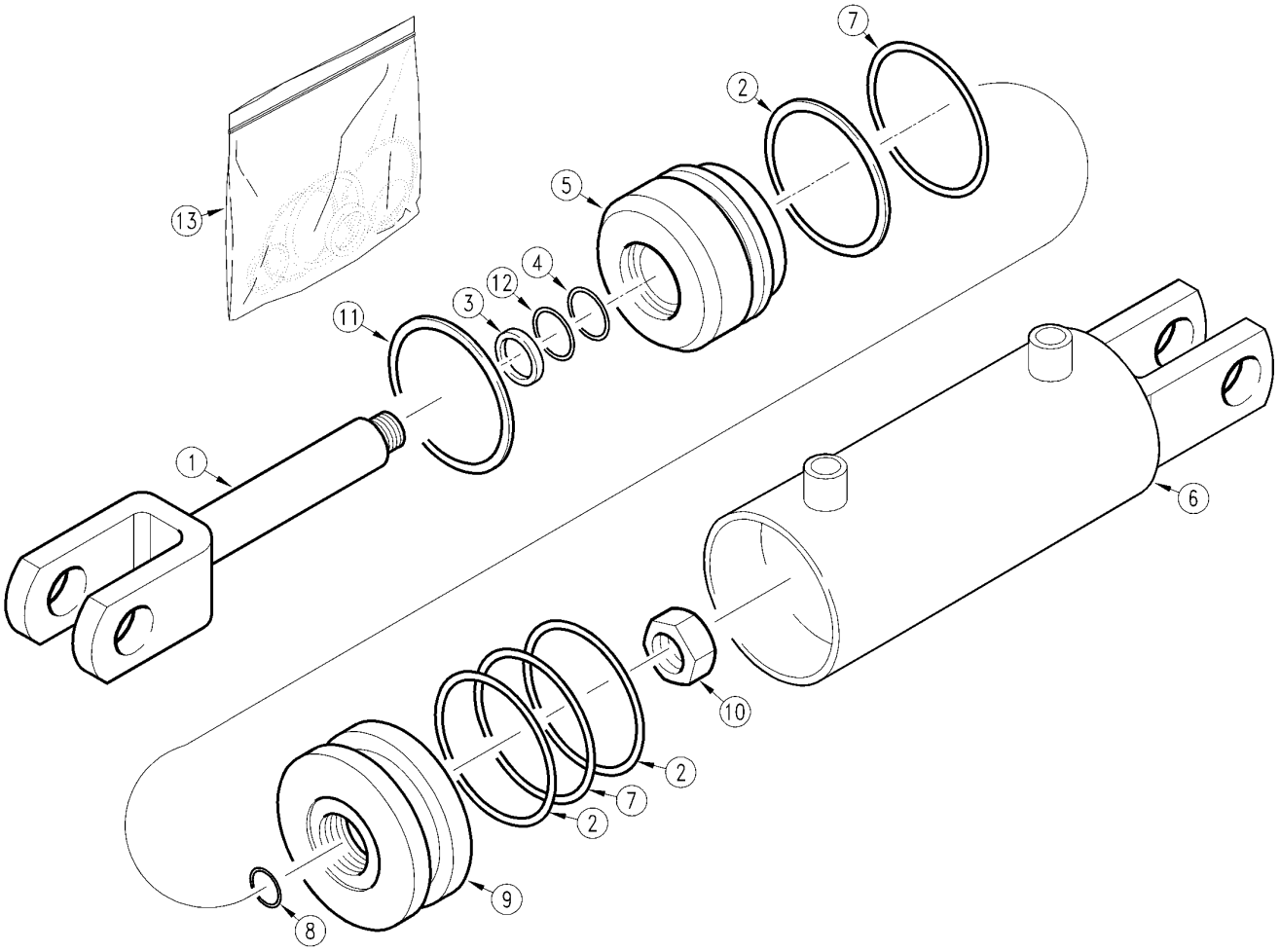

10207

Hydraulic Cylinder (810-005C)

Applies to LR2572, LR2584, LR2596

Ref.	Part No.	Part Description	Comments	Revision
	Dwg 10207	Drawing Image Number		
	810-005C	CYL 2X8X1.12 ROD SINGLE ACTING *		
1.	0A002526	EGY ROD 1.125DIA W/C		
1.	A-2526	RPBY 0A002526	Obsolete	
2.		BACKUP RING 2" OD	Only found in seal kit 13.	
3.		ROD WIPER	Only found in seal kit 13.	
4.		O-RING 1 1/8" ID X 1 3/8"OD	Only found in seal kit 13.	
5.	A-1906	EGY PISTON ROD GUIDE		
6.	B-988	EGY CYLINDER BODY		
7.		O-RING 1 5/8" ID X 2" OD	Only found in seal kit 13.	
8.		O-RING 3/4" ID X 7/8" OD	Only found in seal kit 13.	
9.	A-1845	EGY PISTON		
10.	82464	EGY 7/8-14UNF REG HEX LOCK NUT		
11.	83198	EGY RETAINER RING INTERNAL		
12.		BACKUP RING 1 3/8" OD	Only found in seal kit 13.	
13.	810-012C	CYL SEAL KIT 2 X 8 (ENERGY)		

Hydraulic Cylinder (810-162C)

Applies to LR2572, LR2584, LR2596

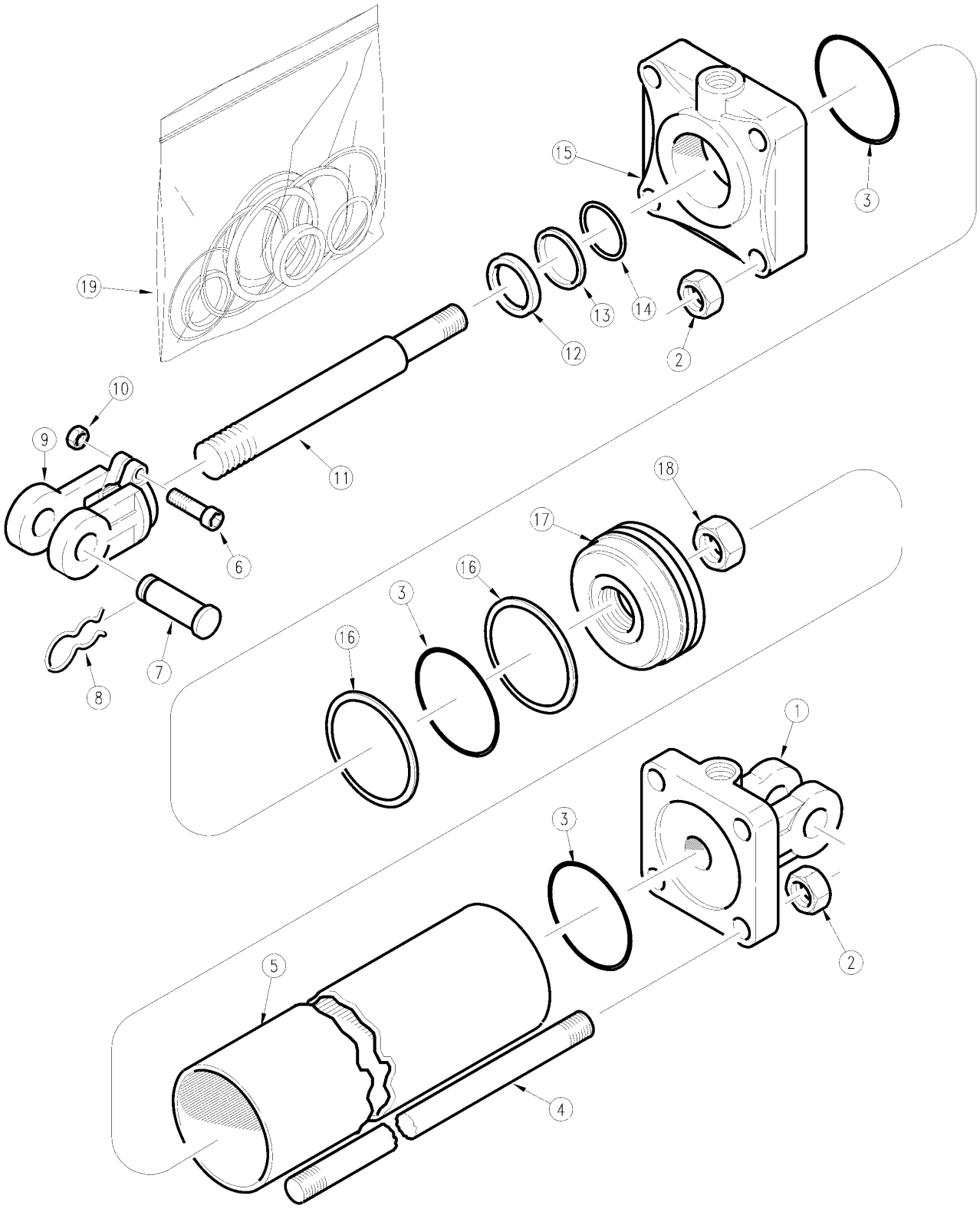

11421

Hydraulic Cylinder (810-162C)

Applies to LR2572, LR2584, LR2596

Ref.	Part No.	Part Description	Comments	Revision
	dwg11421	Drawing Image Number		
	810-162C	CYL 3.5X8X1.25 ROD (TIE ROD)		
1.	6M5142	MW BASE (STD 1" PIN)		
1.	1D1509-4	BASE CROSS		
1.	492676	LION CLEVIS CAP 3.5 ORB		
2.	2A0016	MW TIE ROD NUT		
2.	2A0236-9	TIE ROD NUT CROSS		
2.	128271	LION NUT5/8-18G5(RPBY 803-022C)		
3.		O-RING	Only found in seal kit 19.	
4.	7M5316	MW ROD		
4.	2A0581-1325	TIE ROD CROSS		
4.	492338	LION TIE ROD 5/8 X 8		
5.	5M5116	MW TUBE 3 1/2 X 8 CYLINDER		
5.	1D0009-1050	TUBE CROSS		
5.	491798	LION CYL. TUBE 3.5 X 8		
6.	2A0006	MW CAPSCREW		
6.	2A0079-616	CROSS SCREW, CAP		
6.	148390	LION SCKT SS 3/8(RPBY 801-023C		
7.	2A0208	MW CLEVIS PIN		
7.	1D1551-16275	CROSS CLEVIS PIN		
7.	134953	LION PIN		
8.	2A0132	MW PIN CLIP		
8.	2A0308-1	CROSS PIN, CLIP		
8.	134952	LION PIN CLIP-CLEVIS		
9.	1M6010	MW CLEVIS STD. DUTY		
9.	1D1003-5	CROSS ROD CLEVIS		
9.	492652	LION ROD CLEVIS 1 1/4 (1"PIN)		
10.	2A0012	MW NUT CLEVIS & TIE ROD		
10.	2A0235-6	CROSS NUT, CLEVIS & TIE ROD		
10.	498006	LION THREAD LOCK-NYLON		
11.	2M5414	MW TIE ROD		
11.	1D0205-1262	ROD CROSS		
11.	492700	LION ROD 1.25 DIA. ASAE 8		
12.		WIPER	Only found in seal kit 19.	
13.		BACKUP ROD	Only found in seal kit 19.	
14.		O-RING	Only found in seal kit 19.	
15.	3M5408	MW HEAD		
15.	1D1159-4	HEAD CROSS		
15.	492677	LION ROD CAP 3.5 X 1 1/4 ORB		
16.		BACKUP PISTON	Only found in seal kit 19.	
17.	4M5108	MW PISTON		
17.	4M5102	RPBY 4M5108		
17.	1D1401-350	PISTON CROSS		
17.	492528	LION PISTON 3.5 DIA CST DI		
18.	2A0024	MW PISTON NUT 1"-14		
18.	1A1141	PISTON NUT CROSS		
18.	129110	LION NUT HEX 1-14UNS GR5 PHOSP		
19.	810-149C	SEAL KIT 810-104C MW 3A5102		
19.	810-146C	SEAL KIT CROSS 3.5 CYL 1C4429		
19.	810-256C	SEAL KIT LN 639577 3.5BX1.25RD		

Hydraulic Cylinder (810-162C) Red Lion

Applies to LR2572, LR2584, LR2596

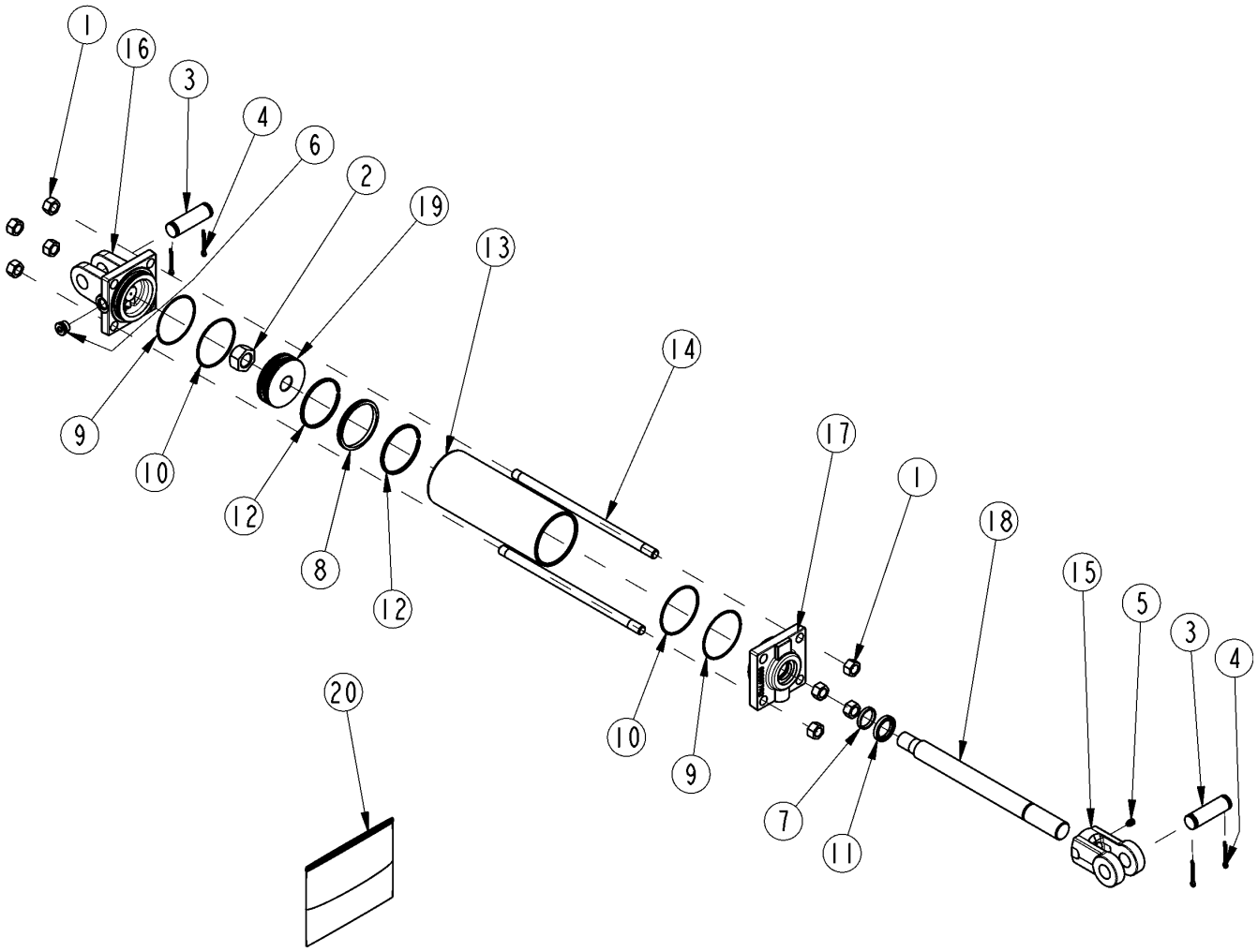

25900

Hydraulic Cylinder (810-162C) Red Lion

Applies to LR2572, LR2584, LR2596

Ref.	Part No.	Part Description	Comments	Revision
	dwg25900	Drawing Image Number		
	810-162C	CYL 3.5X8X1.25 ROD (TIE ROD) *		
1.	803-022C	NUT HEX 5/8-18 PLT		
2.	130560	MON PISTON NUT		
3.	134953	LION PIN		
4.	135995	MON CLEVIS PIN COTTER		
5.	801-023C	SCREW SET SH 3/8-16X3/8 TYPE C		
6.	186562	LION PLUG 3/4-16UNF SOCKET HD		
7.	N/A	MON ROD SEAL	Only Found in Kit #20	
8.	N/A	MON PISTON SEAL (PSP)	Only Found in Kit #20	
9.	N/A	LION B.U. WASHER 073-236	Only Found in Kit #20	
10.	N/A	MON END CAP O-RING	Only Found in Kit #20	
11.	N/A	SEAL WIPER ROD	Only Found in Kit #20	
12.	N/A	MON PISTON WEAR RING	Only Found in Kit #20	
13.	491798	LION CYL. TUBE 3.5 X 8		
14.	492338	LION TIE ROD 5/8 X 8		
15.	492652	LION ROD CLEVIS 1 1/4 (1PIN)		
16.	492676	LION CLEVIS CAP 3.5 ORB		
17.	494286	MON ROD CAP3.5-1.25-3/4ORB-TSS		
18.	492700	LION ROD 1.25 DIA. ASAE 8		
19.	258827	MON PISTN 3.50-1.00-TSS-ISO-WR		
20.	810-888C	MON SEAL KIT 661703		

Rake Angling Kit

Applies to LR2572, LR2584, LR2596

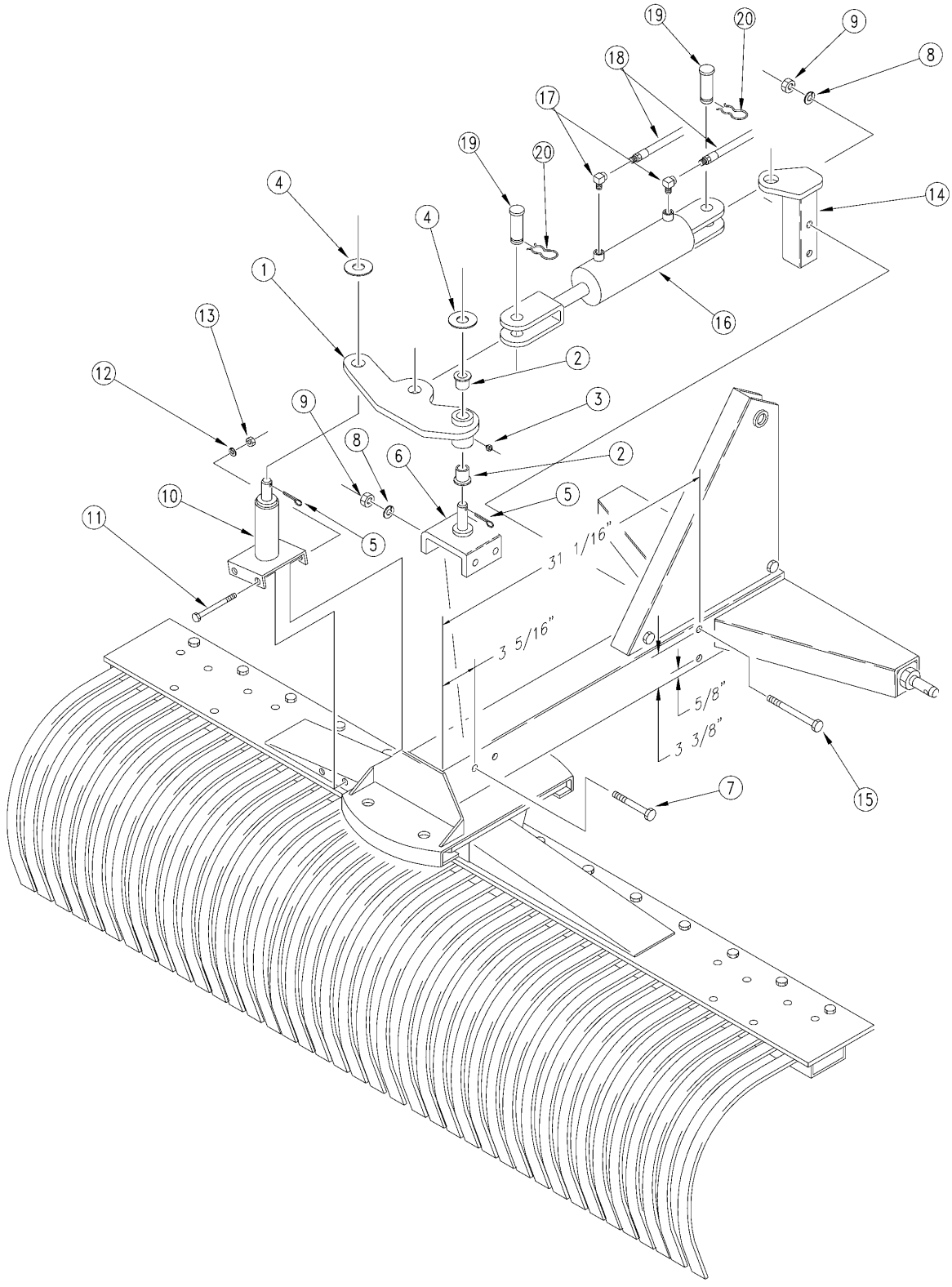

10314

Rake Angling Kit

Applies to LR2572, LR2584, LR2596

Ref.	Part No.	Part Description	Comments	Revision
	dwg10314	Drawing Image Number		
	302-183A	25 SERIES RAKE ANGLING KIT	(S/N 51887+)	Rev. 2 not compat. w/Rev. 1.
	302-178A	25 SERIES RAKE CYLINDER OPTION	(S/N 42980 <-> 51886)	Rev. 1
1.	302-129H	RAKE CYLINDER PIVOT WLDMT		
2.	817-048C	SPINDLE BUSHING		
3.	800-001C	GREASE ZERK STRAIGHT 1/4-28		
4.	804-029C	WASHER FLAT 1 SAE		
5.	805-016C	PIN COTTER 3/16 X 1 1/4 PLT		
6.	302-130H	CYL FRAME MOUNT WELDMENT		
7.	802-047C	HHCS 1/2-13X6 GR5	(S/N 42980+)	Rev. 2 not compat. w/Rev. 1.
7.	802-201C	HHCS 1/2-13X4 3/4 GR5	(S/N 42979-)	Rev. 1
8.	804-015C	WASHER LOCK SPRING 1/2 PLT		
9.	803-020C	NUT HEX 1/2-13 PLT		
10.	302-182H	LR25 CYLINDER MOUNT WELDMENT	(S/N 51887+)	Rev. 3 not compat. w/Rev. 2.
10.	302-159H	LR25 CYLINDER MOUNT WELDMENT	(S/N 42980 <-> 51886)	Rev. 2 not compat. w/Rev. 1.
10.	302-131H	CYLINDER RAKE MOUNT WELDMENT	(S/N 42979-)	Rev. 1
11.	802-027C	HHCS 3/8-16X4 1/2 GR5	(S/N 51887+)	Rev. 3 not compat. w/Rev. 2.
11.	802-318C	HHCS 3/8-16X5 GR5	(S/N 42980 <-> 51886)	Rev. 2 not compat. w/Rev. 1.
11.	802-024C	HHCS 3/8-16X3 GR5	(S/N 42979-)	Rev. 1
12.	804-013C	WASHER LOCK SPRING 3/8 PLT		
13.	803-014C	NUT HEX 3/8-16 PLT		
14.	302-132H	CYLINDER MOUNT WELDMENT		
15.	802-260C	HHCS 1/2-13X7 GR5		
16.	810-005C	CYL 2X8X1.12 ROD SINGLE ACTING		
17.	811-026C	EL 3/8MNPT 3/8FNPT		
18.	811-296C	HH1/4R1 084 3/8MNPT 1/2MNPT		
19.	805-004C	PIN CLEVIS 1 X 2 3/4 USABLE LG		
20.	805-088C	PIN, HAIR COTTER 3/16 WIRE DIA		

Frame & Rake

Applies to LR3572, LR3584, LR3596

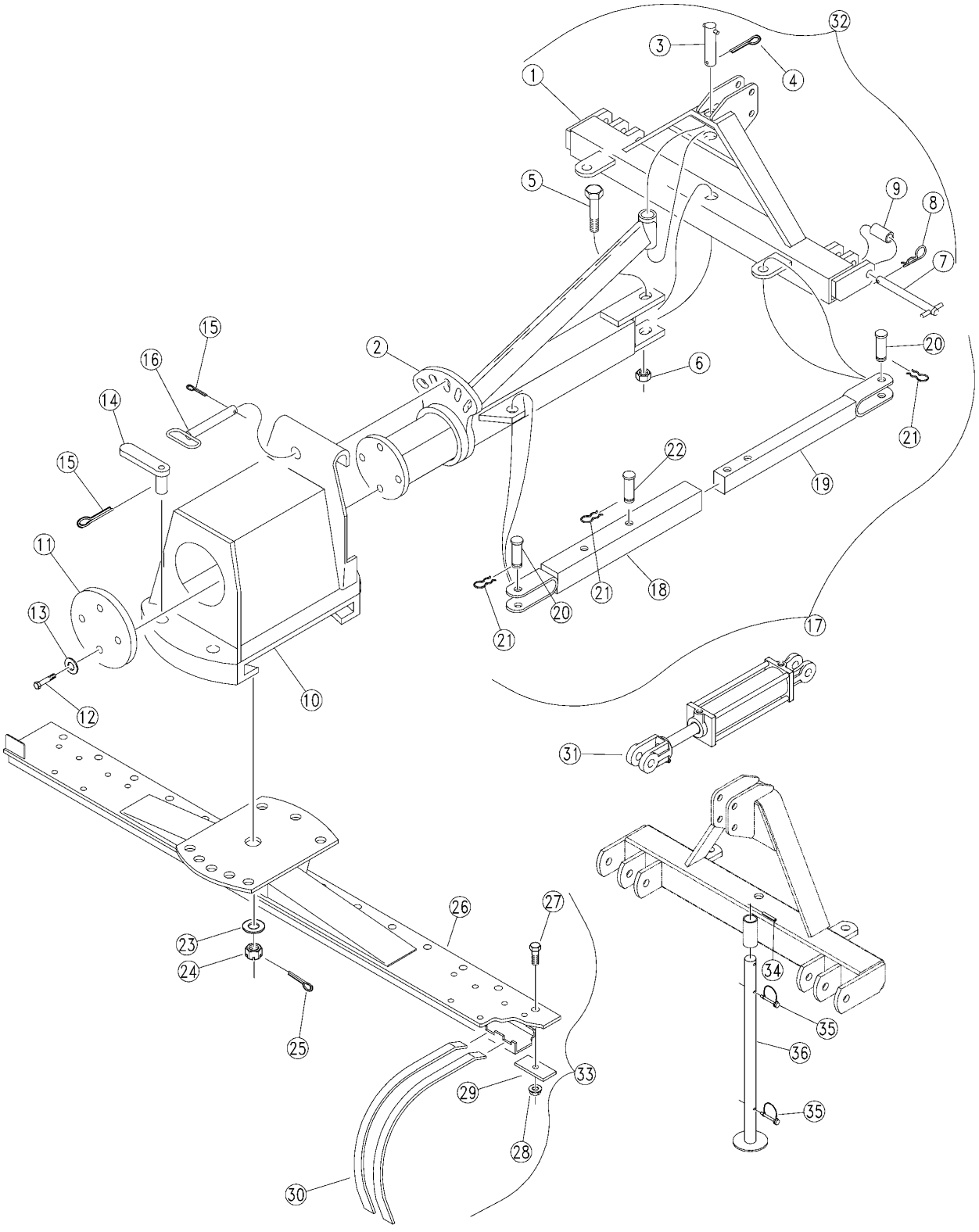

10319

Frame & Rake

Applies to LR3572, LR3584, LR3596

Ref.	Part No.	Part Description	Comments	Revision
	dwg10319	Drawing Image Number		
1.	300-071H	35 SERIES BLADE & RAKE FRAME		
1.	300-071H82	35 BLADE/RAKE FRAME ORANGE		
2.	300-072H	35 SERIES REAR FRAME		
2.	300-072H82	35 REAR FRAME ORANGE		
3.	300-077S	PIVOT PIN ASSY		
4.	805-017C	PIN COTTER 3/16 X 1 3/4 PLT		
5.	802-074C	HHCS 1-8X6 1/2 GR5		
6.	803-038C	NUT HEX 1-8 NYLON INSERT PLT		
7.	305-067S	LOWER HITCH PIN ASSY		Rev. 2
7.	300-106S	REP BY 305-067S		Rev 1; Use up stock
8.	805-015C	PIN LYNCH 5/16 X 1 3/4		
9.	300-296D	BUSHING		
10.	300-073H	TILT TURNTABLE W.A.		
10.	300-073H82	TILT TURNTABLE W.A. ORANGE		
11.	300-084D	RETAINER PLATE		
12.	802-209C	HHCS 5/8-18X1 GR5		
13.	804-022C	WASHER LOCK SPRING 5/8 PLT		
14.	805-203C	PIN 1 1/8OD X2 1/8 USBL W/HNDL		
15.	805-032C	PIN HAIR COTTER .148 WIRE		
16.	805-202C	PIN 3/4OD X 2 7/32 USBL W/HNDL		
17.	300-079K	MALE-FEMALE LINK ASSY		
18.	300-075H	FEMALE LINK WELDMENT		
19.	300-076H	MALE LINK WELDMENT		
20.	805-137C	PIN CLEVIS 1 X 2 PLT		
21.	805-088C	PIN, HAIR COTTER 3/16 WIRE DIA		
22.	805-090C	PIN CLEVIS 1 X 3 3/16 LG		
23.	804-028C	WASHER FLAT 1 USS		
24.	803-095C	NUT HEX SLOTTED 1-14		
25.	805-017C	PIN COTTER 3/16 X 1 3/4 PLT		
26.	302-160H	LR25/3572 RAKE MOUNT WELDM'T		
26.	302-161H	LR25/3584 RAKE MOUNT WELDM'T		
26.	302-162H	LR25/3596 RAKE MOUNT WELDM'T		
27.	802-022C	HHCS 3/8-16X1 1/2 GR5		
28.	803-171C	MAC-LOK 3/8-16 SUPER FLANGE		
29.	302-130D	RAKE TINE CLIP		
30.	820-037C	RAKE TOOTH 1	LR3572 36 Total, LR3584 42 Total & LR3596 48 Total	
31.	810-162C	CYL 3.5X8X1.25 ROD (TIE ROD)		
32.	300-078A	35 SERIES FRAME ASSY		
33.	302-167A	LR25/3572 RAKE ASS'Y		
33.	302-168A	LR25/3584 RAKE ASS'Y		
33.	302-169A	LR25/3596 RAKE ASS'Y		
34.	805-177C	PIN ROLL 5/16 X 1 3/4 PLT	(S/N 197311+)	
35.	805-065C	PIN WIRE RETAINING 1/4 X 1 3/4	(S/N 197311+)	
36.	300-171H	SUPPORT STAND WELDMENT - RB35	(S/N 197311+)	

Decal Placement

Applies to LR3572, LR3584, LR3596

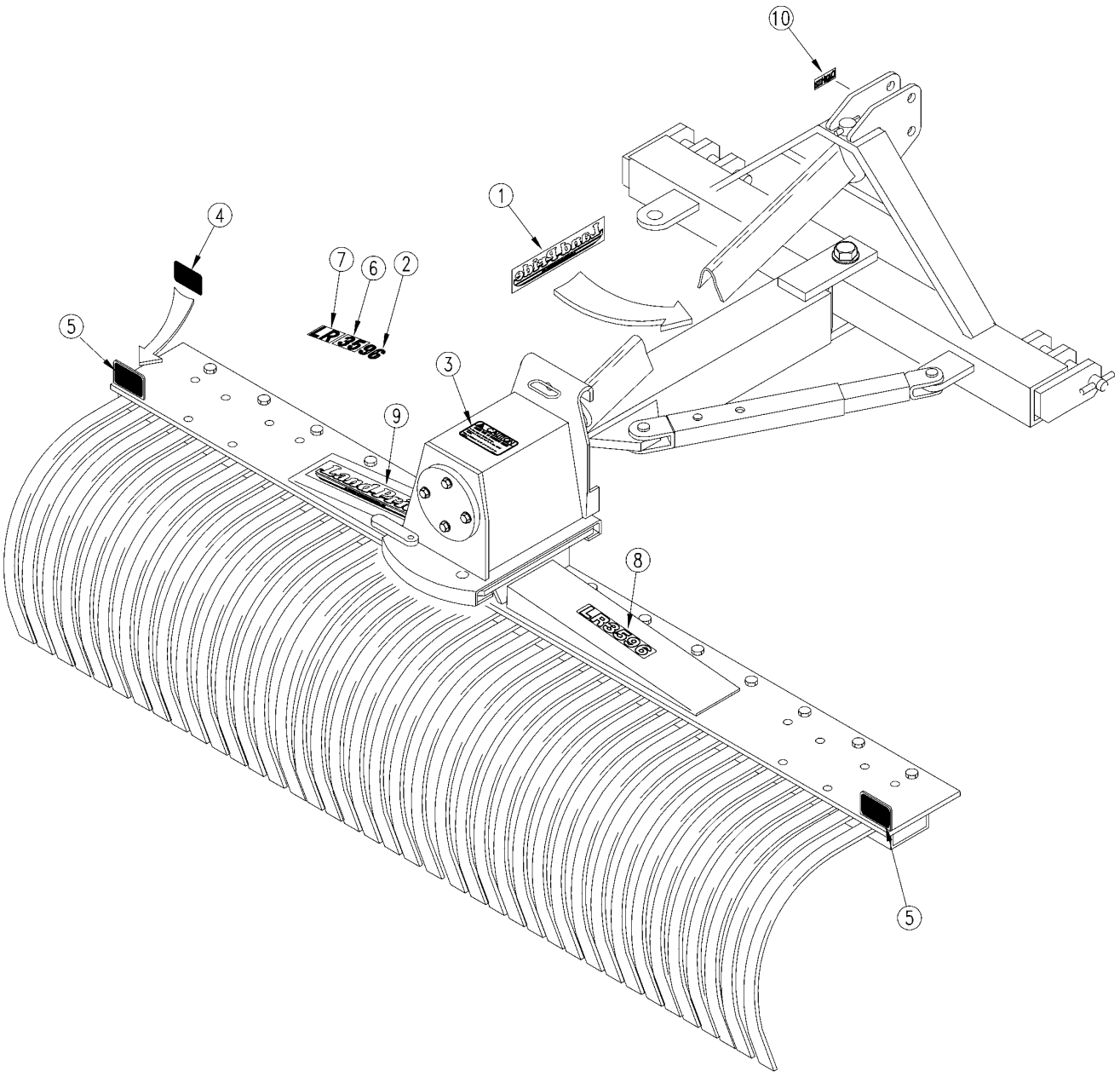

17575

Decal Placement

Applies to LR3572, LR3584, LR3596

Ref.	Part No.	Part Description	Comments	Revision
	dwg17575	Drawing Image Number		
	302-156A	LR3572 DECAL PACKAGE		
	302-157A	LR3584 DECAL PACKAGE		
	302-158A	LR3596 DECAL PACKAGE		
1.	818-899C	RPBY 848-161C	(S/N 252303+)	Rev. 2 not compat. w/Rev. 1.
1.	848-161C	DECAL LANDPRIDE 13.25 BRWN/GLD		
2.	818-109C	DECAL 72 LP - BUCKSKIN	(S/N 252302-)	
2.	818-111C	DECAL 84 LP - BUCKSKIN	(S/N 252302-)	
2.	818-112C	DECAL 96 LP - BUCKSKIN	(S/N 252302-)	
3.	818-202C	DECAL CAUTION FALL MBOARD/RAKE		
4.	818-229C	DECAL AMBER REFLECTOR	LR3596 ONLY	
5.	818-230C	DECAL RED REFLECTOR		
6.	818-103C	DECAL 35 SERIES LP - BUCKSKIN	(S/N 252302-)	
7.	818-735C	N/A	OBSOLETE	
8.	838-002C	DECAL LR3584-BEIGE	(S/N 252303+)	
8.	838-003C	DECAL LR3596-BEIGE	(S/N 252303+)	
9.	818-898C	RPBY 848-159C	(S/N 252303+)	
9.	848-159C	DECAL LANDPRIDE 10" BROWN/GOLD		
10.	838-517C	DECAL QUICK HITCH SYSTEM		

Land Pride Touch-up Paints

Applies to LR3572, LR3584, LR3596

No diagram associated with this Parts List

Land Pride Touch-up Paints

Applies to LR3572, LR3584, LR3596

Ref.	Part No.	Part Description	Comments	Revision
1.	821-011C	LP BEIGE SPRAY CAN	Spray can	
1.	821-070C	GLOSS BLACK SPRAY CAN	Spray can	
1.	821-054C	MED. RED SPRAY TRCK/CTR	Spray can	
1.	821-058C	GREEN SPRAY CUTTERS	Spray can	
1.	821-066C	ORANGE SPRAY CAN	Spray can	
1.	821-067C	BLUE SPRAY CAN	Spray can	
1.	821-080C	PAINT ALUMINUM/ZINC SPRAY CAN	Spray can	
2.	821-011CTU	LP BEIGE TOUCH-UP 5OZ	Touch-up bottle with brush	
2.	821-070CTU	GLOSS BLACK TOUCH-UP 5OZ	Touch-up bottle with brush	
2.	821-054CTU	MED RED TOUCH-UP 5OZ	Touch-up bottle with brush	
2.	821-058CTU	GREEN TOUCH-UP 5OZ	Touch-up bottle with brush	
2.	821-066CTU	ORANGE TOUCH-UP 5OZ	Touch-up bottle with brush	
2.	821-067CTU	BLUE TOUCH-UP 5OZ	Touch-up bottle with brush	
2.	821-080CTU	PAINT ALUMINUM/ZINC TOUCH UP	Touch-up bottle with brush	
3.	821-011CQT	LP BEIGE QUART	Quart can	
3.	821-070CQT	GLOSS BLACK QUART	Quart can	
3.	821-054CQT	MED RED QUART	Quart can	
3.	821-058CQT	GREEN QUART	Quart can	
3.	821-066CQT	ORANGE QUART	Quart can	
3.	821-067CQT	BLUE QUART	Quart can	
3.	821-080CQT	PAINT ALUMINUM/ZINC QUART	Quart can	
4.	821-011CGL	LP BEIGE GALLON	Gallon can	
4.	821-070CGL	GLOSS BLACK GALLON	Gallon can	
4.	821-054CGL	MED RED GALLON	Gallon can	
4.	821-058CGL	GREEN GALLON	Gallon can	
4.	821-066CGL	ORANGE GALLON	Gallon can	
4.	821-067CGL	BLUE GALLON	Gallon can	
4.	821-080CGL	PAINT ALUMINUM/ZINC GALLON	Gallon can	

Flip Down Grader Blade

Applies to LR3572, LR3584, LR3596

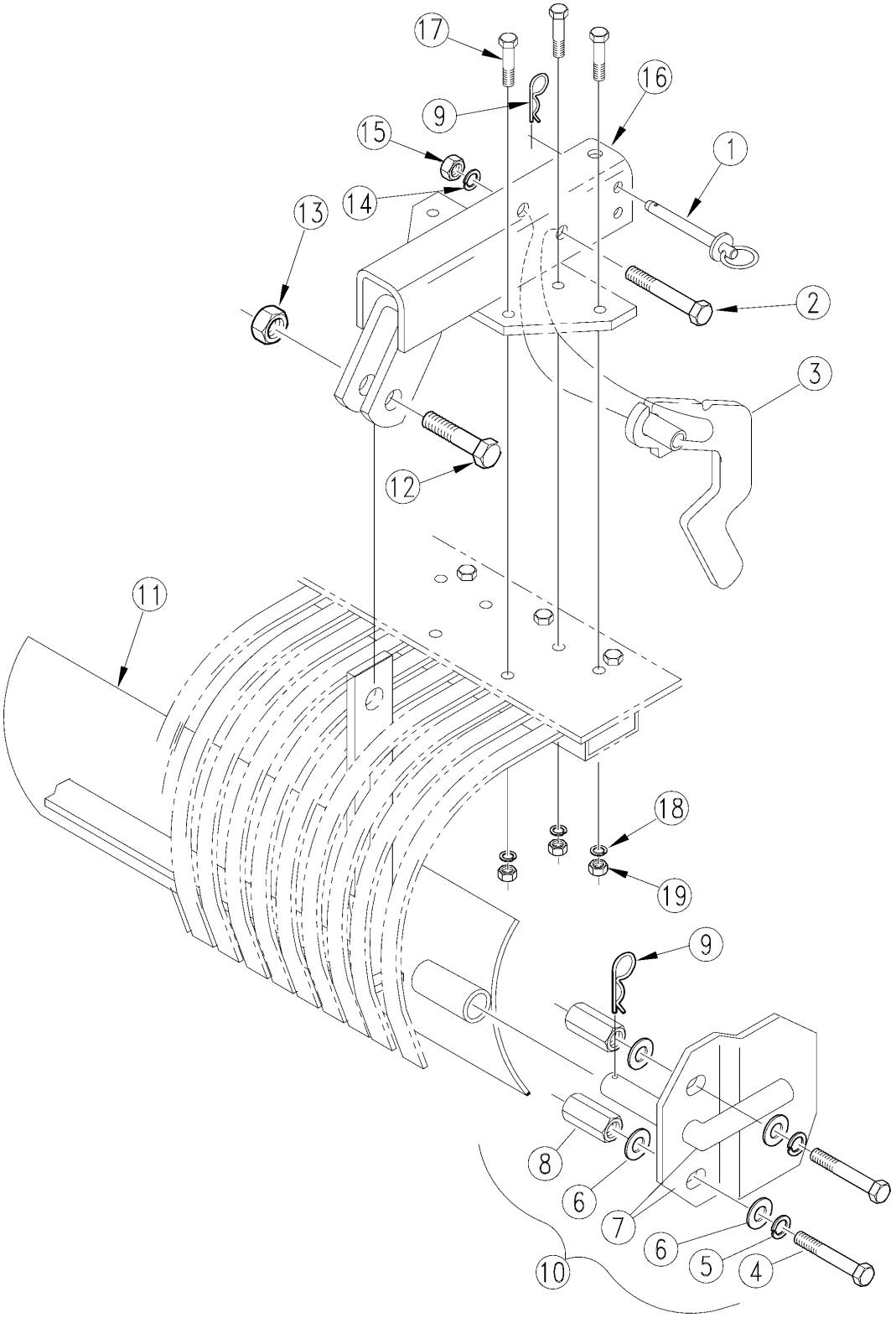

20983

Flip Down Grader Blade

Applies to LR3572, LR3584, LR3596

Ref.	Part No.	Part Description	Comments	Revision
	dwg20983	Drawing Image Number		
	302-152A	FLIP DOWN GRADER BLADE ASSY 5'	Consist of items 1 - 15	
	302-105A	6' GRADER BLADE ASY	Consist of items 1 - 15	
	302-106A	7' GRADER BLADE ASY	Consist of items 1 - 15	
	302-107A	8' GRADER BLADE ASY	Consist of items 1 - 15	
	302-260A	GB MOUNT LESS DUAL GW	Consist of items 16 - 19	
1.	805-001C	PIN BENT 3/8 X 3 USABLE LW/PIN		
2.	802-039C	HHCS 1/2-13X3 GR5		
3.	302-097H	BLADE LOCK HANDLE WELDMENT		
4.	802-080C	HHCS 7/16-14X1 GR5		
5.	804-014C	WASHER LOCK 7/16 PLT		
6.	804-041C	WASHER FLAT 7/16 SAE PLT		
7.	302-017H	SIDE PLATE WELDMENT		
8.	803-067C	NUT HEX CPLR 7/16-14X1 3/4 PLT		
9.	805-032C	PIN HAIR COTTER .148 WIRE		
10.	302-124S	GRADER BLADE SIDE PLATE ASSY		
11.	302-145H	5' GRADER BLADE WELDMENT		
11.	302-098H	6' GRADER BLADE WELDMENT		
11.	302-099H	7' GRADER BLADE WELDMENT		
11.	302-100H	8' GRADER BLADE WELDMENT		
12.	802-086C	HHCS 3/4-10X2 3/4 GR5		
13.	803-026C	NUT LOCK 3/4-10 PLT		
14.	804-015C	WASHER LOCK SPRING 1/2 PLT		
15.	803-020C	NUT HEX 1/2-13 PLT		
16.	302-204H	GRADER BLD MTG PULL TYPE		
17.	802-216C	HHCS 3/8-16X2 3/4 GR5		
18.	804-060C	WASHER INT-EXT 3/8 PLT		
19.	803-014C	NUT HEX 3/8-16 PLT		

Gauge Wheel Dual

Applies to LR3572, LR3584, LR3596

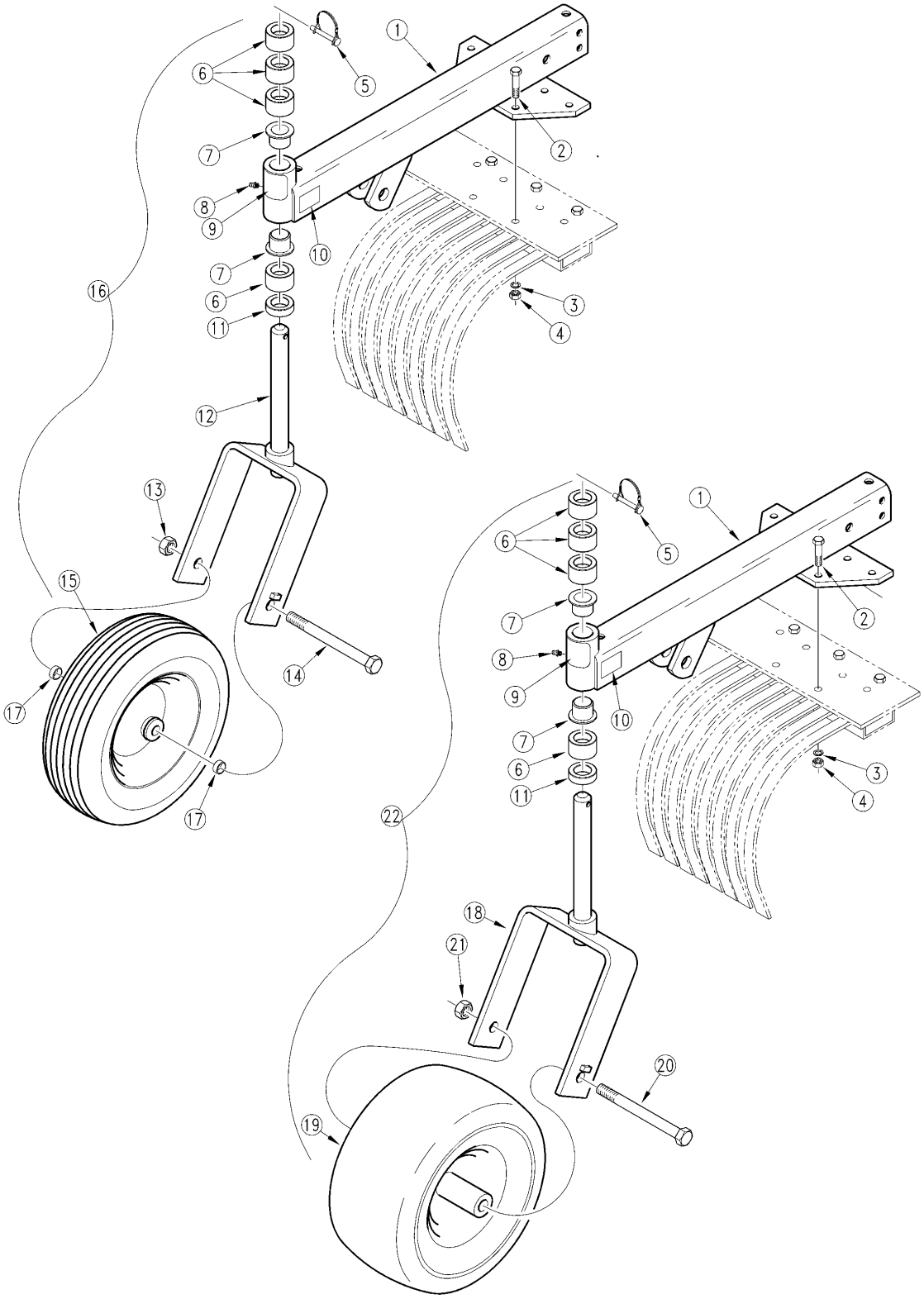

10325

Gauge Wheel Dual

Applies to LR3572, LR3584, LR3596

Ref.	Part No.	Part Description	Comments	Revision
	dwg10325	Drawing Image Number		
1.	302-202H	RAKE DUAL G.W. WELDMENT		Rev. 2
1.	302-094H	RPBY 302-202H		Rev 1; Use up stock
2.	802-216C	HHCS 3/8-16X2 3/4 GR5		
3.	804-060C	WASHER INT-EXT 3/8 PLT		
4.	803-014C	NUT HEX 3/8-16 PLT		
5.	805-065C	PIN WIRE RETAINING 1/4 X 1 3/4		
6.	827-002C	SPACER 1"		
7.	817-048C	SPINDLE BUSHING		
8.	800-001C	GREASE ZERK STRAIGHT 1/4-28		
9.	818-335C	DECAL RED NARROW REFLECTOR		
10.	818-298C	DECAL GREASE 25HRS BLACK/WHITE		
11.	827-001C	SPACER 1/2"		
12.	302-095H	NARROW GW YOKE WELDMENT		
13.	803-094C	NUT 5/8-11 NYLON COLLAR THIN		
14.	802-262C	HHCS 5/8-11X7 GR5		
15.	814-041C	WHEEL & TIRE PNEU 4.10 X 6		Gauge wheel tires should be inflated to 25 PSI.
16.	302-176A	DUAL GAUGE WHEELS-NRW 91+		
17.	302-076D	WHEEL SPACER		
18.	302-096H	WIDE GW YOKE WELDMENT		
19.	814-053C	TIRE & WHL 13/6.50X6 W/3/4 BOR		
20.	802-072C	HHCS 3/4-10X9 1/2 GR5		
21.	803-025C	NUT HEX 3/4-10 PLT NYLOCK		
22.	302-174A	DUAL GAUGE WHEELS-WIDE 91+		

Gauge Wheel Single

Applies to LR3572, LR3584, LR3596

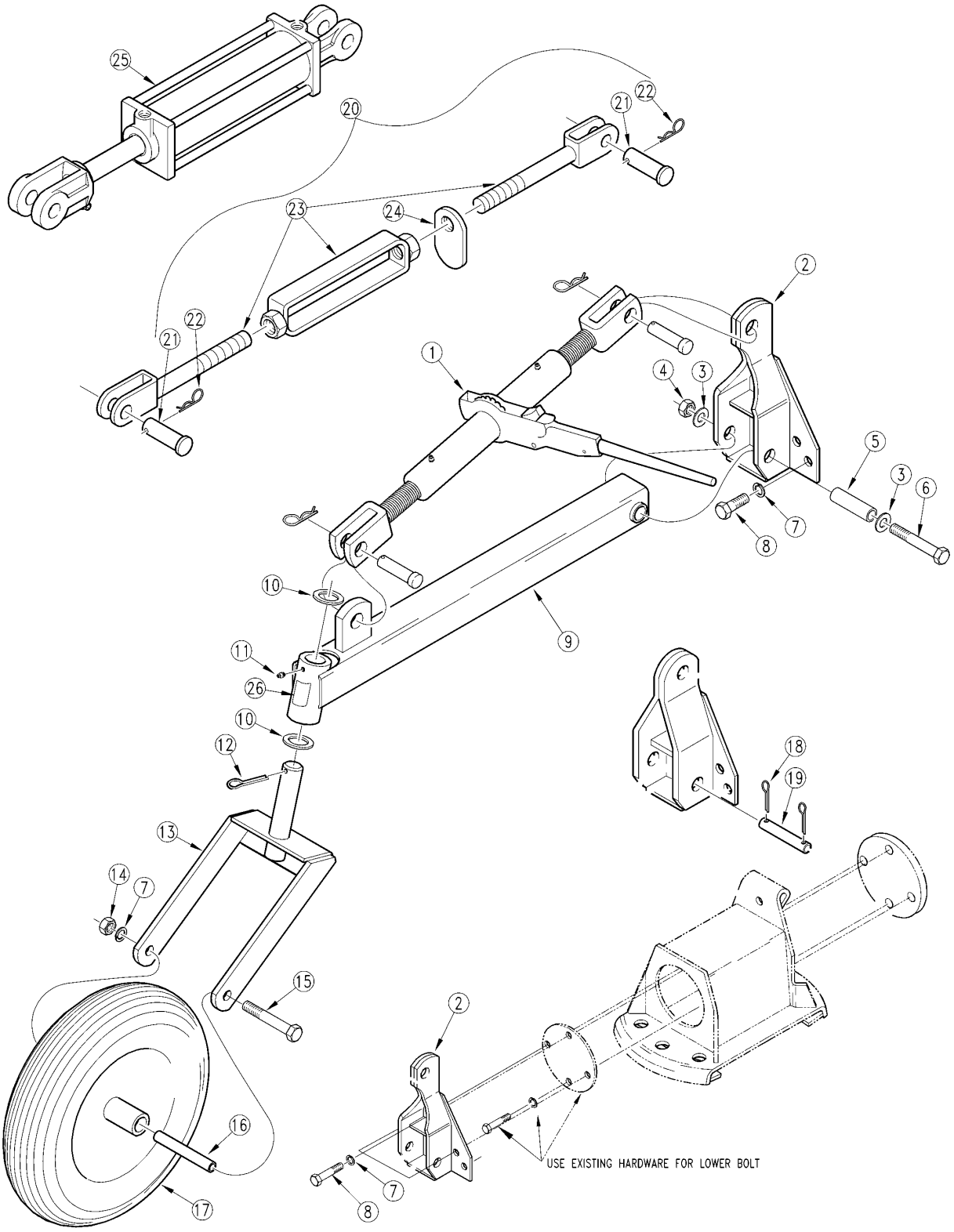

16952

Gauge Wheel Single

Applies to LR3572, LR3584, LR3596

Ref.	Part No.	Part Description	Comments	Revision
	dwg16952	Drawing Image Number		
	300-014A	25 & 35 BLADE & RAKE SINGLE GW	Includes items 1 through 18	
1.	890-177C	RATCHET JACK - HEAVY DUT		
2.	300-015H	GAUGE WHEEL MOUNT WELDMENT		
3.	804-021C	WASHER FLAT 5/8 SAE PLT		
4.	803-024C	NUT LOCK 5/8-11 PLT		
5.	300-375D	TB RD DOM. 7/8ODX11GWLX3 15/16		
6.	802-062C	HHCS 5/8-11X5 GR5		
7.	804-022C	WASHER LOCK SPRING 5/8 PLT		
8.	802-207C	HHCS 5/8-18X1 1/2 GR5		
9.	300-016H	ARM WELDMENT		
10.	804-062C	WASHER MACH 1.88 X 1.25 X 10GA		
11.	800-080C	GREASE ZERK 1/4-28 THD FORMING		
12.	805-105C	PIN COTTER 1/4 X 2 1/2 PLT		
13.	300-017H	YOKE WELDMENT		
14.	803-021C	NUT HEX 5/8-11 PLT		
15.	802-208C	HHCS 5/8-11X8 GR5		
16.	300-050D	SINGLE GAUGE WHEEL SLEEVE		
17.	814-039C	WHEEL & TIRE PNEU 4.8/4.00 X 8		
18.	805-104C	PIN COTTER 3/16 X 1 1/2 PLT	Replaced by items 3, 4, 6 & 7	
19.	300-042D	MOUNT PIN	Replaced by items 3, 4, 6 & 7	
20.	300-068K	TURNBUCKLE ASSEMBLY	Replaced by 890-177C item 1	
21.	805-090C	PIN CLEVIS 1 X 3 3/16 LG		
22.	805-088C	PIN, HAIR COTTER 3/16 WIRE DIA		
23.	300-067H	SINGLE GW TURNBUCKLE WELDMENT		
24.	300-057D	LOCK TAB		
25.	810-162C	CYL 3.5X8X1.25 ROD (TIE ROD)		
26.	818-335C	DECAL RED NARROW REFLECTOR		

Gauge Wheel Tire (814-041C)

Applies to LR3572, LR3584, LR3596

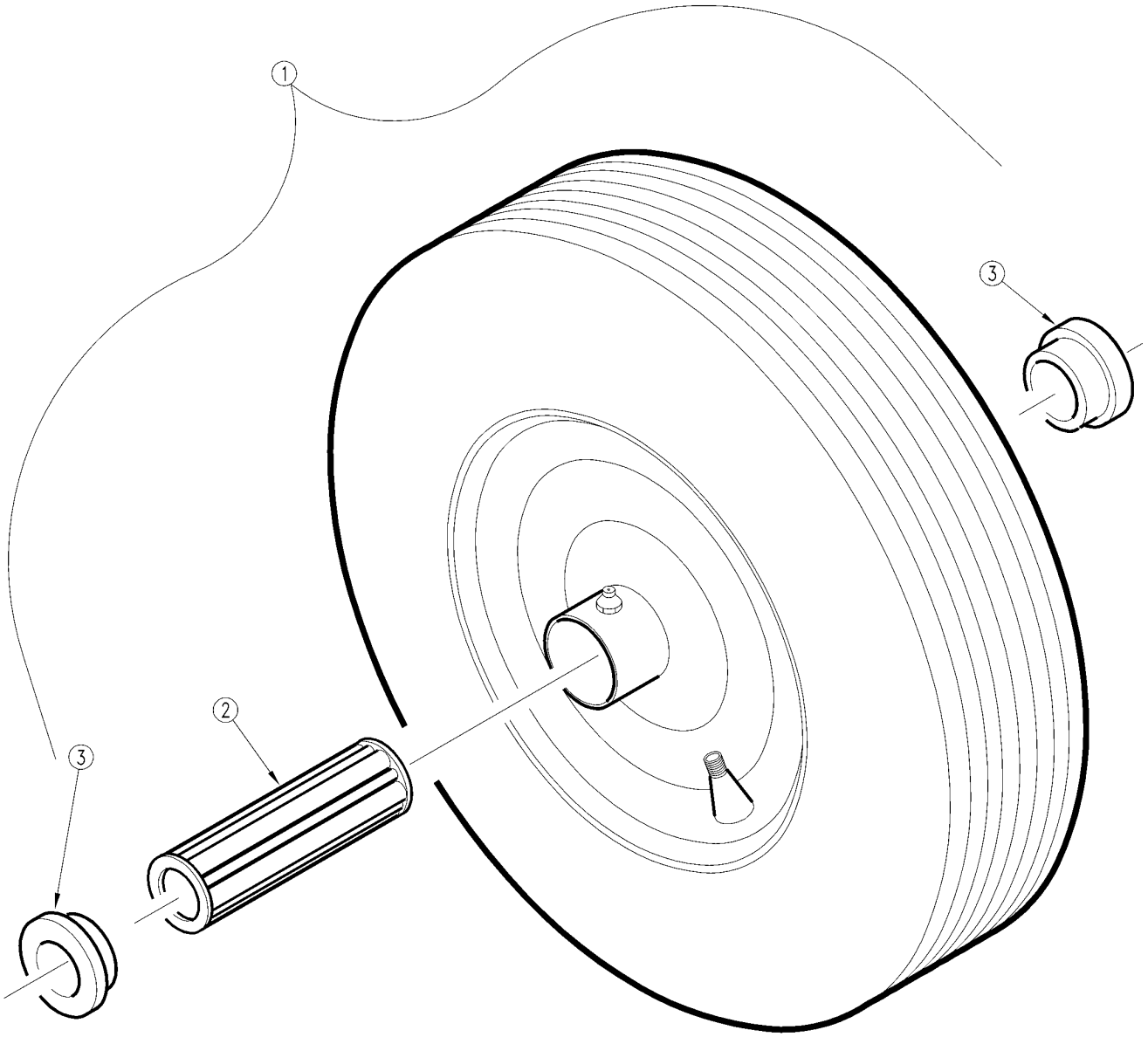

13625

Gauge Wheel Tire (814-041C)

Applies to LR3572, LR3584, LR3596

Ref.	Part No.	Part Description	Comments	Revision
	dwg13625	Drawing Image Number		
1.	814-041C	WHEEL & TIRE PNEU 4.10 X 6		
2.	822-089C	BEARING 5/8X1 3/8X1 GLEASON587	two required	
2.	53-181	TILDEN BRG 5/8IDX1 3/8ODX2 1/2	one required	
3.	890-173C	END CAP GLEASON 4206		
3.	53-167	TILDEN RTNR 5/8IDX1 3/8ODX1/4L		

Gauge Wheel Tire (814-053C)

Applies to LR3572, LR3584, LR3596

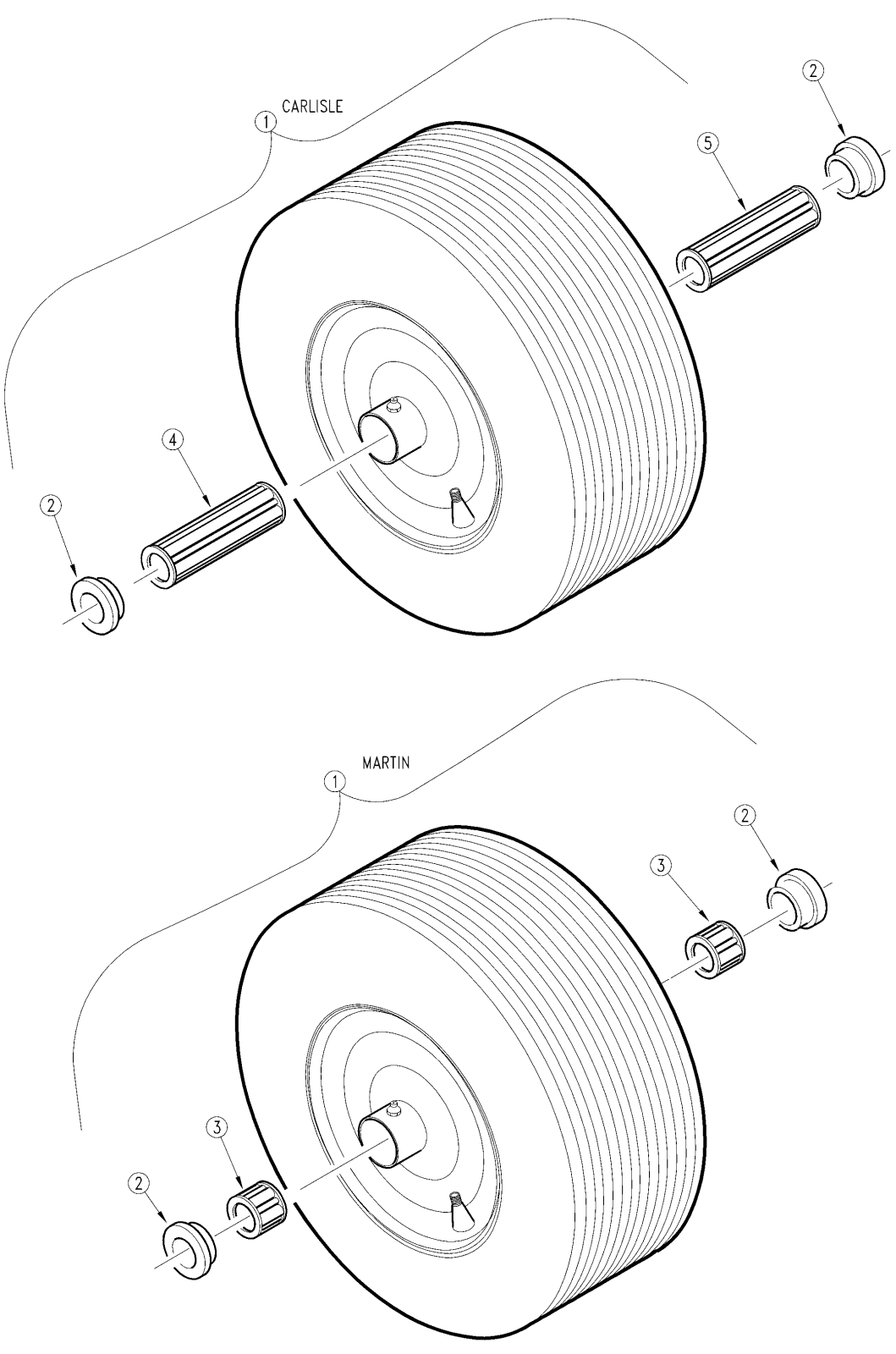

13627

Gauge Wheel Tire (814-053C)

Applies to LR3572, LR3584, LR3596

Ref.	Part No.	Part Description	Comments	Revision
	dwg13627	Drawing Image Number		
1.	814-053C	TIRE & WHL 13/6.50X6 W/3/4 BOR		
2.	53-164	TILDEN RTNR 3/4IDX1 3/8OD		
3.	53-189	TILDEN BRG 3/4ID1.34ODX15/16L		
4.	822-222C	BRG,.75X1.38X3.75L ROLLER		
5.	822-223C	BRG .75X1.38X3.00L ROLLER		

Hydraulic Cylinder (810-162C)

Applies to LR3572, LR3584, LR3596

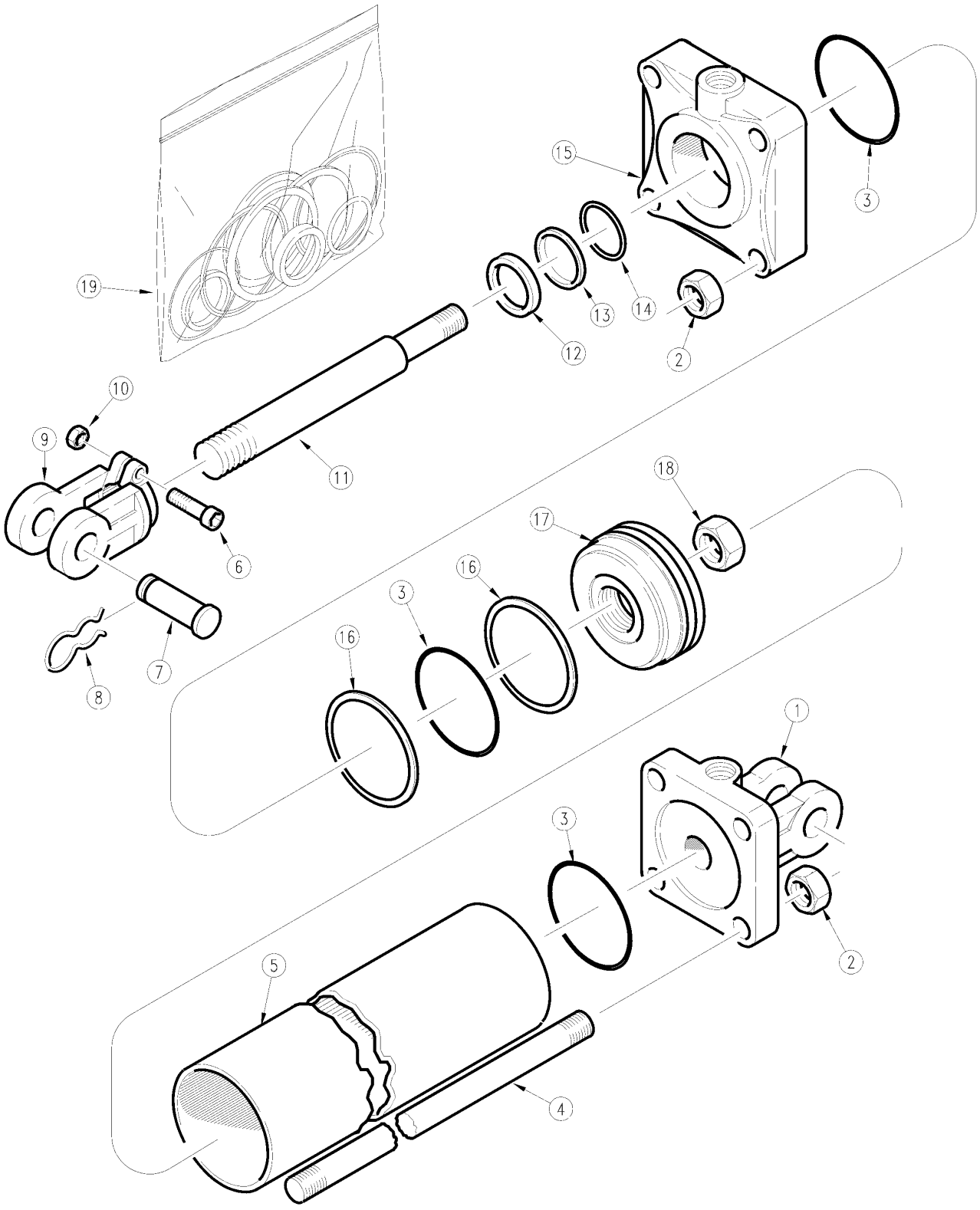

11421

Hydraulic Cylinder (810-162C)

Applies to LR3572, LR3584, LR3596

Ref.	Part No.	Part Description	Comments	Revision
	dwg11421	Drawing Image Number		
	810-162C	CYL 3.5X8X1.25 ROD (TIE ROD)		
1.	6M5142	MW BASE (STD 1" PIN)		
1.	1D1509-4	BASE CROSS		
1.	492676	LION CLEVIS CAP 3.5 ORB		
2.	2A0016	MW TIE ROD NUT		
2.	2A0236-9	TIE ROD NUT CROSS		
2.	128271	LION NUT5/8-18G5(RPBY 803-022C		
3.		O-RING	Only found in seal kit 19.	
4.	7M5316	MW ROD		
4.	2A0581-1325	TIE ROD CROSS		
4.	492338	LION TIE ROD 5/8 X 8		
5.	5M5116	MW TUBE 3 1/2 X 8 CYLINDER		
5.	1D0009-1050	TUBE CROSS		
5.	491798	LION CYL. TUBE 3.5 X 8		
6.	2A0006	MW CAPSCREW		
6.	2A0079-616	CROSS SCREW, CAP		
6.	148390	LION SCKT SS 3/8(RPBY 801-023C		
7.	2A0208	MW CLEVIS PIN		
7.	1D1551-16275	CROSS CLEVIS PIN		
7.	134953	LION PIN		
8.	2A0132	MW PIN CLIP		
8.	2A0308-1	CROSS PIN, CLIP		
8.	134952	LION PIN CLIP-CLEVIS		
9.	1M6010	MW CLEVIS STD. DUTY		
9.	1D1003-5	CROSS ROD CLEVIS		
9.	492652	LION ROD CLEVIS 1 1/4 (1"PIN)		
10.	2A0012	MW NUT CLEVIS & TIE ROD		
10.	2A0235-6	CROSS NUT, CLEVIS & TIE ROD		
10.	498006	LION THREAD LOCK-NYLON		
11.	2M5414	MW TIE ROD		
11.	1D0205-1262	ROD CROSS		
11.	492700	LION ROD 1.25 DIA. ASAE 8		
12.		WIPER	Only found in seal kit 19.	
13.		BACKUP ROD	Only found in seal kit 19.	
14.		O-RING	Only found in seal kit 19.	
15.	3M5408	MW HEAD		
15.	1D1159-4	HEAD CROSS		
15.	492677	LION ROD CAP 3.5 X 1 1/4 ORB		
16.		BACKUP PISTON	Only found in seal kit 19.	
17.	4M5108	MW PISTON		
17.	4M5102	RPBY 4M5108		
17.	1D1401-350	PISTON CROSS		
17.	492528	LION PISTON 3.5 DIA CST DI		
18.	2A0024	MW PISTON NUT 1"-14		
18.	1A1141	PISTON NUT CROSS		
18.	129110	LION NUT HEX 1-14UNS GR5 PHOSP		
19.	810-149C	SEAL KIT 810-104C MW 3A5102		
19.	810-146C	SEAL KIT CROSS 3.5 CYL 1C4429		
19.	810-256C	SEAL KIT LN 639577 3.5BX1.25RD		

Hydraulic Cylinder (810-162C) Red Lion

Applies to LR3572, LR3584, LR3596

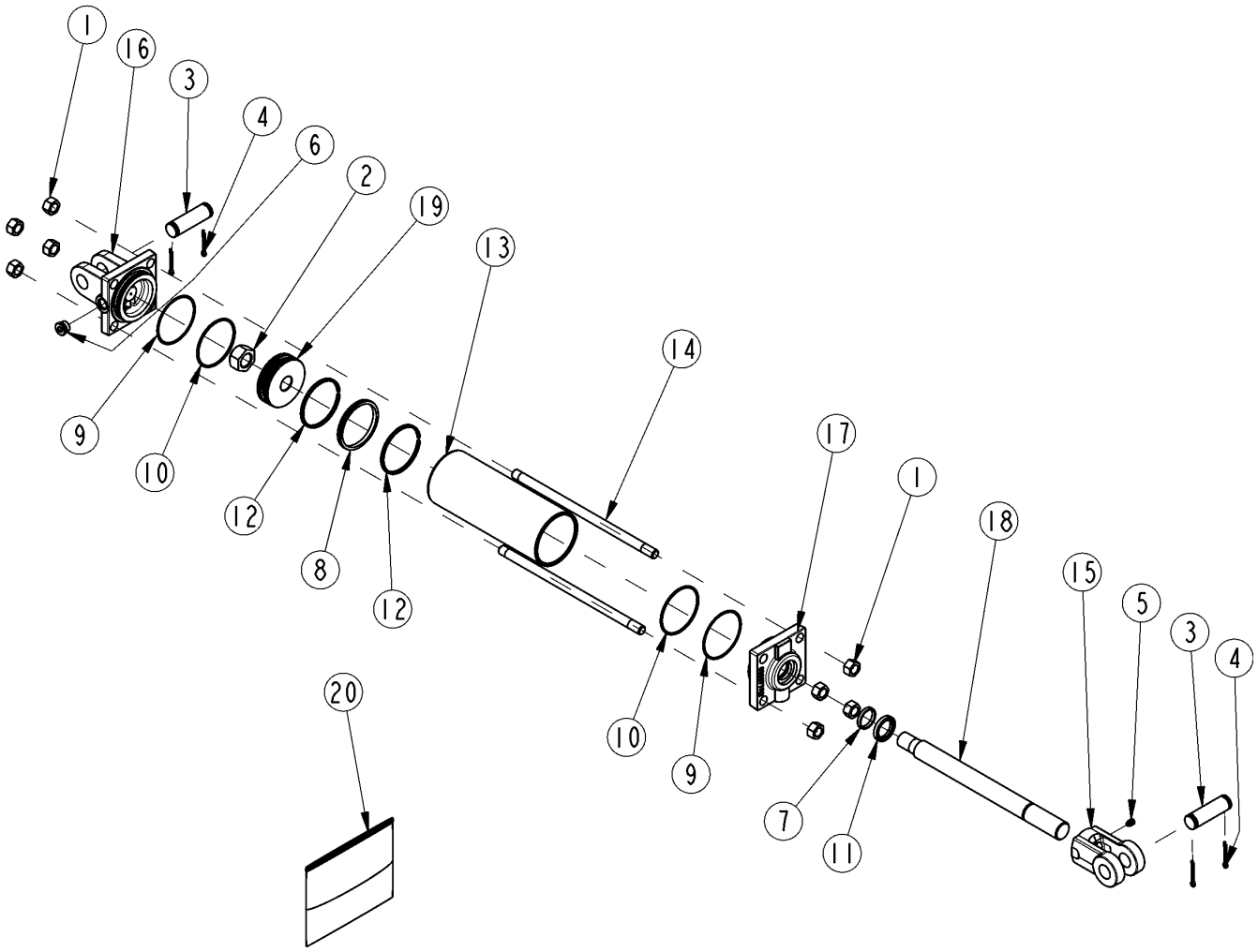

25900

Hydraulic Cylinder (810-162C) Red Lion

Applies to LR3572, LR3584, LR3596

Ref.	Part No.	Part Description	Comments	Revision
	dwg25900	Drawing Image Number		
	810-162C	CYL 3.5X8X1.25 ROD (TIE ROD) *		
1.	803-022C	NUT HEX 5/8-18 PLT		
2.	130560	MON PISTON NUT		
3.	134953	LION PIN		
4.	135995	MON CLEVIS PIN COTTER		
5.	801-023C	SCREW SET SH 3/8-16X3/8 TYPE C		
6.	186562	LION PLUG 3/4-16UNF SOCKET HD		
7.	N/A	MON ROD SEAL	Only Found in Kit #20	
8.	N/A	MON PISTON SEAL (PSP)	Only Found in Kit #20	
9.	N/A	LION B.U. WASHER 073-236	Only Found in Kit #20	
10.	N/A	MON END CAP O-RING	Only Found in Kit #20	
11.	N/A	SEAL WIPER ROD	Only Found in Kit #20	
12.	N/A	MON PISTON WEAR RING	Only Found in Kit #20	
13.	491798	LION CYL. TUBE 3.5 X 8		
14.	492338	LION TIE ROD 5/8 X 8		
15.	492652	LION ROD CLEVIS 1 1/4 (1PIN)		
16.	492676	LION CLEVIS CAP 3.5 ORB		
17.	494286	MON ROD CAP3.5-1.25-3/4ORB-TSS		
18.	492700	LION ROD 1.25 DIA. ASAE 8		
19.	258827	MON PISTN 3.50-1.00-TSS-ISO-WR		
20.	810-888C	MON SEAL KIT 661703		

Part Number Index

The Part Number Index is a numeric index of all part numbers included in this manual. The index shows what page(s) the part is used on.

Part Number	Page
*	21, 35, 73, 77, 99
0A002526	73
128271	75, 97
129110	75, 97
130560	77, 99
134952	75, 97
134953	75, 77, 97, 99
135995	77, 99
148390	75, 97
186562	77, 99
1A1141	75, 97
1D0009-1050	75, 97
1D0205-1262	75, 97
1D1003-5	75, 97
1D1159-4	75, 97
1D1401-350	75, 97
1D1509-4	75, 97
1D1551-16275	75, 97
1M6010	75, 97
258827	77, 99
2A0006	75, 97
2A0012	75, 97
2A0016	75, 97
2A0024	75, 97
2A0079-616	75, 97
2A0132	75, 97
2A0208	75, 97
2A0235-6	75, 97
2A0236-9	75, 97
2A0308-1	75, 97
2A0581-1325	75, 97
2M5414	75, 97
300-003H	9
300-013H	51, 53
300-014A	67, 91
300-015H	67, 91
300-016H	67, 91
300-017H	67, 91
300-042D	67, 91
300-050D	67, 91
300-050H	7
300-052H	7
300-053H	27
300-057D	67, 91
300-060H	27
300-061H	51, 53
300-061H82	51
300-062H	51, 53
300-063H	27
300-066A	51, 53
300-067H	67, 91
300-068K	67, 91
300-071H	81
300-071H82	81
300-072H	81
300-072H82	81
300-073H	81
300-073H82	81
300-075H	81
300-076H	81
300-077S	81
300-078A	81
300-079K	81
300-084D	81
300-105H	29, 31
300-105H82	31
300-106S	81
300-109A	29, 31
300-113B	51
300-120B	31
300-131H	9
300-131H82	9
300-132H	9
300-135A	9
300-137A	9
300-171H	31, 51, 81
300-176D	7
300-177D	7
300-190D	29, 31
300-190D82	31
300-196D	51, 53
300-196D82	51
300-272H	21
300-272H82	21
300-273H	21
300-273H82	21
300-274A	21
300-274A82	21
300-275H	9
300-296D	81
300-299D	29, 31
300-337D	9
300-370D	9
300-370D82	9
300-375D	67, 91
300-522D	9
300-522D82	9
301-139D	29, 31
301-151D	9
302-002H	7
302-003H	7
302-005H	7
302-006H	7
302-007A	27
302-008D	27, 29, 53
302-010A	27
302-014D	27, 29, 53
302-017H	41, 61, 87
302-020A	23
302-021H	23
302-022D	43, 63
302-024H	23
302-025H	23
302-031H	23
302-066D	27, 29, 53
302-076A	27
302-076D	43, 45, 63, 65, 89
302-094H	43, 45, 63, 65, 89
302-095H	43, 45, 63, 65, 89
302-096H	43, 45, 63, 65, 89
302-097H	41, 61, 87
302-098H	41, 61, 87
302-099H	41, 61, 87
302-100H	41, 61, 87
302-101A	43, 63
302-102K	43, 63
302-103A	43, 63
302-104K	43, 63
302-105A	41, 61, 87
302-106A	41, 61, 87
302-107A	41, 61, 87
302-114D	29
302-115H	27
302-116H	27
302-117H	27
302-118H	53
302-119H	53
302-120H	53
302-121A	53
302-122A	53
302-123A	53
302-124S	41, 61, 87
302-129H	79
302-130D	31, 51, 81
302-130H	79
302-131H	79
302-132H	79
302-133H	29
302-134H	29
302-135H	29
302-136H	29
302-137A	29
302-138A	29
302-139A	29
302-140A	29
302-141D	9
302-145H	41, 61, 87
302-148A	35
302-149A	35
302-150A	35
302-151A	35
302-152A	61, 87
302-152D	25
302-156A	83
302-157A	83
302-158A	83
302-159H	79
302-160H	51, 81
302-161H	51, 81
302-162H	51, 81
302-163H	31
302-164H	31
302-165H	31
302-166H	31
302-167A	51, 53, 81
302-168A	51, 53, 81
302-169A	51, 53, 81
302-170A	29, 31
302-171A	29, 31
302-172A	29, 31
302-173A	29, 31
302-174A	45, 65, 89
302-176A	45, 65, 89
302-178A	79
302-179A	57
302-180A	57
302-181A	57
302-182H	79
302-183A	79
302-189H	9
302-190H	9
302-191H	25
302-193A	9
302-195A	25
302-196A	13
302-197A	13
302-198H	17, 25
302-202H	43, 45, 63, 65, 89
302-204H	41, 61, 87
302-231H	9
302-232A	9
302-234H	19
302-235H	19
302-236A	19
302-249H	19
302-250A	19
302-252A	19
302-258A	17
302-259H	17
302-260A	41, 61, 87
305-067S	81
308-339D	31, 51
310-305D	25
326-329D	9
3M5408	75, 97
491798	75, 77, 97, 99
492338	75, 77, 97, 99
492528	75, 97
492652	75, 77, 97, 99
492676	75, 77, 97, 99
492677	75, 97
492700	75, 77, 97, 99
494286	77, 99
498006	75, 97
4M5102	75, 97
4M5108	75, 97
53-164	49, 71, 95
53-167	47, 69, 93
53-181	47, 69, 93
53-189	49, 71, 95
5M5116	75, 97
6M5142	75, 97
7M5316	75, 97
800-001C	17, 23, 25, 43, 45, 63, 65, 79, 89
800-080C	67, 91
801-023C	77, 99
802-010C	7, 9
802-012C	25
802-022C	27, 29, 31, 51, 53, 81
802-024C	79
802-027C	79
802-039C	23, 41, 61, 87
802-047C	79
802-062C	67, 91
802-072C	43, 45, 63, 65, 89
802-074C	81
802-080C	19, 41, 61, 87
802-086C	41, 61, 87
802-099C	27, 29, 31
802-138C	25
802-146C	7
802-162C	51, 53
802-191C	17, 19
802-201C	79
802-207C	67, 91
802-208C	67, 91
802-209C	81
802-212C	19
802-216C	41, 43, 45, 61, 63, 65, 87, 89
802-226C	9
802-260C	79
802-262C	43, 45, 63, 65, 89
802-318C	79
802-322C	17, 25
802-383C	9
802-417C	21
802-622C	21
803-008C	7
803-014C	17, 19, 27, 29, 41, 43, 45, 53, 61, 63, 65, 79, 87, 89
803-018C	17, 25
803-019C	23
803-020C	9, 27, 29, 31, 41, 61, 79, 87
803-021C	7, 51, 53, 67, 91

Part Number Index (continued)

Part Number	Page
803-022C	77, 99
803-024C	67, 91
803-025C	43, 45, 63, 65, 89
803-026C	19, 41, 61, 87
803-029C	27
803-038C	81
803-053C	29, 31
803-067C	19, 41, 61, 87
803-094C	43, 45, 63, 65, 89
803-095C	51, 53, 81
803-149C	21
803-171C	31, 51, 81
803-177C	9, 25
803-185C	9
803-209C	21
803-299C	9
803-349C	21
804-013C	79
804-014C	19, 41, 61, 87
804-015C	9, 17, 25, 27, 29, 31, 41, 61, 79, 87
804-016C	23
804-021C	67, 91
804-022C	7, 51, 53, 67, 81, 91
804-028C	51, 53, 81
804-029C	79
804-037C	21
804-041C	19, 41, 61, 87
804-055C	27
804-059C	7
804-060C	17, 19, 27, 29, 41, 43, 45, 53, 61, 63, 65, 87, 89
804-061C	23
804-062C	67, 91
805-001C	41, 61, 87
805-002C	19
805-004C	79
805-015C	81
805-016C	27, 79
805-017C	9, 29, 31, 51, 53, 81
805-032C	19, 23, 41, 51, 53, 61, 81, 87
805-045C	23
805-065C	9, 31, 43, 45, 51, 63, 65, 81, 89
805-088C	67, 79, 81, 91
805-089C	23
805-090C	67, 81, 91
805-104C	67, 91
805-105C	67, 91
805-109C	7
805-111C	7, 9, 21, 27, 29, 31, 51, 53
805-126C	17, 25
805-127C	23
805-137C	81
805-161C	9, 31, 51
805-177C	81
805-202C	81
805-203C	51, 53, 81
805-213C	29, 31
805-214C	9
807-038C	7
810-005C	73, 79
810-012C	73
810-146C	75, 97
810-149C	75, 97
810-162C	67, 75, 77, 81, 91, 97, 99
810-256C	75, 97
810-888C	77, 99
811-026C	79
811-296C	79
814-039C	67, 91
814-040C	23
814-041C	43, 45, 47, 63, 65, 69, 89, 93
814-053C	43, 45, 49, 63, 65, 71, 89, 95
814-079C	17, 25
817-048C	17, 25, 43, 45, 63, 65, 79, 89
818-083C	11
818-084C	33, 35
818-085C	55
818-087C	11
818-092C	11
818-100C	13
818-101C	37
818-102C	57
818-103C	83
818-104C	13
818-107C	37
818-109C	13, 37, 57, 83
818-111C	37, 57, 83
818-112C	37, 57, 83
818-154C	33, 35, 55
818-155C	33, 35, 55
818-156C	33, 35, 55
818-164C	11, 33, 35, 55
818-165C	33, 35, 55
818-202C	13, 33, 35, 37, 55, 57, 83
818-229C	37, 57, 83
818-230C	37, 57, 83
818-231C	35
818-298C	23, 25, 45, 65, 89
818-335C	13, 25, 43, 45, 63, 65, 67, 89, 91
818-735C	13, 37, 57, 83
818-890C	13
818-891C	37, 57
818-898C	57, 83
818-899C	83
818-900C	37
818-992C	13
818-993C	13
818-994C	37
818-995C	37
818-996C	37
818-997C	37
818-998C	57
818-999C	57
820-036C	7, 9
820-037C	27, 29, 31, 51, 53, 81
821-011C	15, 39, 59, 85
821-011CGL	15, 39, 59, 85
821-011CQT	15, 39, 59, 85
821-011CTU	15, 39, 59, 85
821-054C	15, 39, 59, 85
821-054CGL	15, 39, 59, 85
821-054CQT	15, 39, 59, 85
821-054CTU	15, 39, 59, 85
821-058C	15, 39, 59, 85
821-058CGL	15, 39, 59, 85
821-058CQT	15, 39, 59, 85
821-058CTU	15, 39, 59, 85
821-066C	15, 39, 59, 85
821-066CGL	15, 39, 59, 85
821-066CQT	15, 39, 59, 85
821-066CTU	15, 39, 59, 85
821-067C	15, 39, 59, 85
821-067CGL	15, 39, 59, 85
821-067CQT	15, 39, 59, 85
821-067CTU	15, 39, 59, 85
821-070C	15, 39, 59, 85
821-070CGL	15, 39, 59, 85
821-070CQT	15, 39, 59, 85
821-070CTU	15, 39, 59, 85
821-080C	15, 39, 59, 85
821-080CGL	15, 39, 59, 85
821-080CQT	15, 39, 59, 85
821-080CTU	15, 39, 59, 85
822-089C	47, 69, 93
822-222C	71, 95
822-223C	71, 95
82464	73
827-001C	17, 25, 43, 45, 63, 65, 89
827-002C	17, 25, 43, 45, 63, 65, 89
827-007C	17
827-012C	17, 25
83198	73
838-001C	57
838-002C	83
838-003C	83
838-036C	13
838-484C	13
838-517C	13, 33, 55, 83
838-962C	37, 57
838-963C	13
838-967C	13
848-159C	57, 83
848-161C	37, 83
890-138C	23
890-173C	47, 69, 93
890-177C	67, 91
A-1845	73
A-1906	73
A-2526	73
B-988	73
Dwg 10207	73
Dwg 10408	35
Dwg 10820	11
Dwg 12009	9
Dwg 15191	33
Dwg 15194	55
Dwg 17572	13
Dwg 17573	37
Dwg 17574	57
Dwg 39260	21
dwg10314	79
dwg10318	51
dwg10319	81
dwg10324	31
dwg10325	45, 65, 89
dwg10409	29
dwg10813	7
dwg11412	23
dwg11421	75, 97
dwg12010	25
dwg13625	47, 69, 93
dwg13627	71, 95
dwg15184	27
dwg15190	43, 63
dwg15192	53
dwg16952	67, 91
dwg17575	83
dwg19042	49
dwg20983	41, 61, 87
dwg20991	17
dwg20992	19
dwg25900	77, 99
N/A	9, 13, 37, 55, 57, 77, 83, 99

Great Plains Manufacturing, Inc.
Corporate Office: P.O. Box 5060
Salina, Kansas 67402-5060 USA

www.landpride.com