Table of Contents

# Snow Trip Blade

## STB1560, STB1572, STB1584 & STB1596

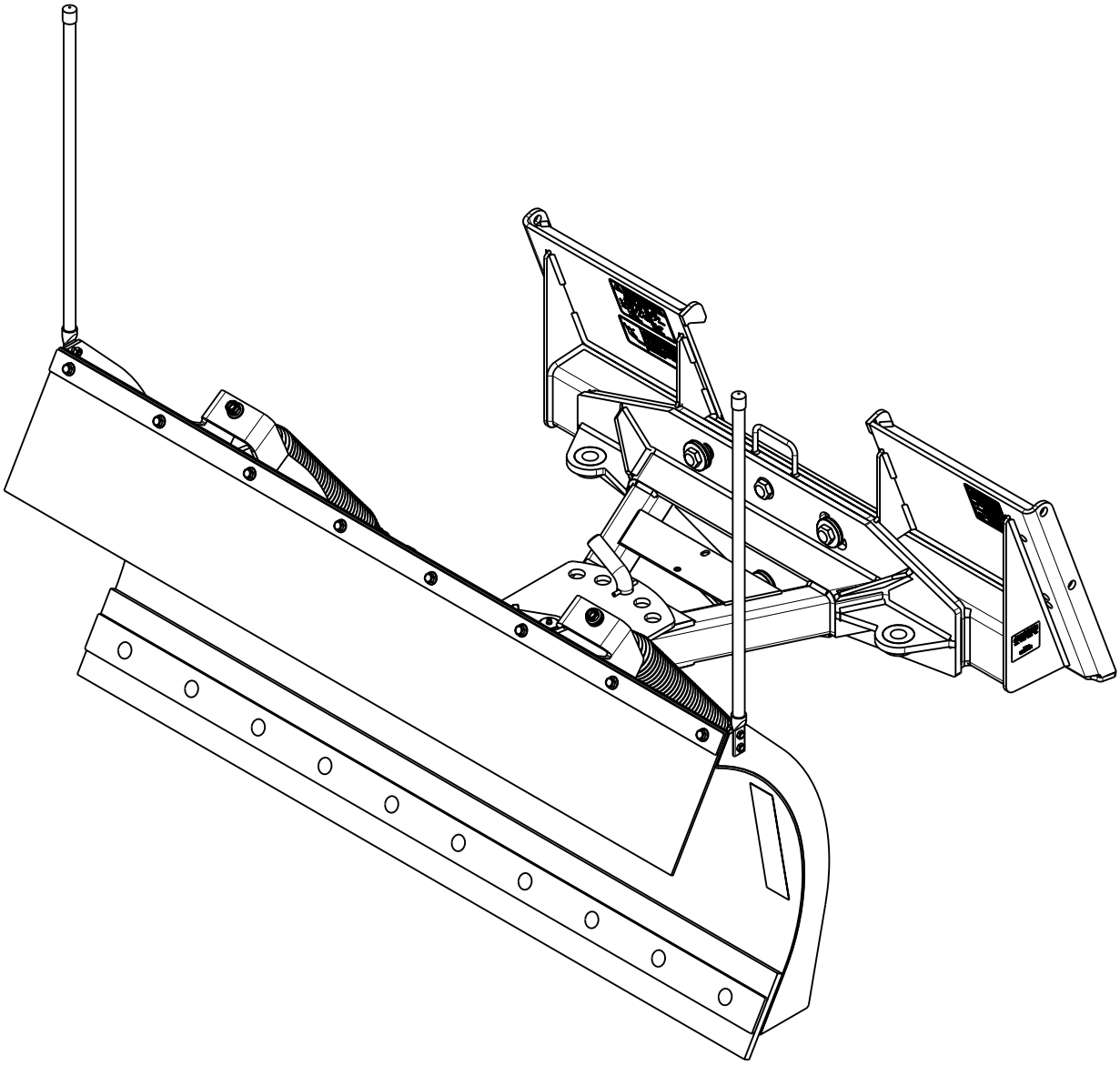

39685

## *301-493M*
## *Operator's Manual*

Read the Operator's Manual entirely. When you see this symbol, the subsequent instructions and warnings are serious - follow without exception. Your life and the lives of others depend on it!

***Cover photo may show optional equipment not supplied with standard unit.***

***For an Operator's Manual and Decal Kit in French Language, please see your Land Pride dealer.***

Printed 1/10/24

## Machine Identification

Record your machine details in the log below. If you replace this manual, be sure to transfer this information to the new manual.

If you, or the dealer, have added Options not originally ordered with the machine, or removed Options that were originally ordered, the weights and measurements are no longer accurate for your machine. Update the record by adding the machine weight and measurements provided in the Specifications & Capacities Section of this manual with the Option(s) weight and measurements.

| | |
|---|---|
| **Model Number** | |
| **Serial Number** | |
| **Machine Height** | |
| **Machine Length** | |
| **Machine Width** | |
| **Machine Weight** | |
| **Delivery Date** | |
| **First Operation** | |
| **Accessories** | _____<br>_____<br>_____ |

## Dealer Contact Information

**Name:** _____

**Street:** _____

**City/State:** _____

**Telephone:** _____

**Email:** _____

**California Proposition 65**

**WARNING**: Cancer and reproductive harm - www.P65Warnings.ca.gov

**Important Safety Information . . . . . 1**
Safety at All Times . . . . . 1
Look for the Safety Alert Symbol . . . . . 1
Safety Labels . . . . . 6
**Introduction . . . . . 9**
Application . . . . . 9
Using This Manual . . . . . 9
Terminology . . . . . 9
Owner Assistance . . . . . 9
Serial Number . . . . . 9
Further Assistance . . . . . 9
**Section 1: Assembly & Set-up . . . . . 10**
Tractor Requirements . . . . . 10
Torque Requirements . . . . . 10
Before You Start . . . . . 10
Tractor Shutdown Procedure . . . . . 10
Cutting Edge Assembly . . . . . 10
Steel Cutting Edge Assembly . . . . . 10
Poly Cutting Edge Assembly . . . . . 10
Orange Marker Assembly . . . . . 11
Angling Options Assembly . . . . . 12
Bent Pin Assembly . . . . . 12
Dual Cylinder Assembly . . . . . 13
Dual Cylinder with Cushion Valve Assembly . . . 14
Tractor Hook-Up . . . . . 15
Hose Hook-up . . . . . 15
Equipment Clearances . . . . . 15
Purging Hydraulic System . . . . . 15
**Section 2: Adjustments . . . . . 16**
Skid Shoes . . . . . 16
Locking and Unlocking Blade . . . . . 16
Manual Angle Adjustment . . . . . 17
Spring Adjustment . . . . . 17
**Section 3: Operating Procedures . . . . . 18**
Pre-Start Checklist . . . . . 18
General Safety Information . . . . . 18
Pre-Operation Inspection . . . . . 18
Snow Trip Blade Functions . . . . . 19
Float Lock and Unlock . . . . . 19
From Locked To Float . . . . . 19
From Float To Locked . . . . . 19
Transporting . . . . . 20
Pushing Light Aggregate Materials . . . . . 20
Plowing Snow . . . . . 21
Unhooking the Blade . . . . . 22
General Operating Instructions . . . . . 22
**Section 4: Optional Equipment . . . . . 23**
Steel and Poly Cutting Edge Options . . . . . 23
Deflector Flap Option . . . . . 23
Tractor Hose & Coupler Options . . . . . 23
Angling Options . . . . . 24
**Section 5: Maintenance & Lubrication . . . . . 25**
General Maintenance Information . . . . . 25
Cutting Edge Removal and Installation . . . . . 25
Preparation Instructions . . . . . 25
Steel Cutting Edge Removal and Assembly . . . . 25
Poly Cutting Edge Removal and Assembly . . . . 26
Hydraulics . . . . . 27
Long-Term Storage . . . . . 27
Lubrication Points . . . . . 28
Pivot Pin . . . . . 28
Pivot Pins . . . . . 28
**Section 6: Specifications & Capacities . . . . 29**
**Section 7: Features and Benefits . . . . . 30**
**Section 8: Troubleshooting . . . . . 31**
**Section 9: Torque Values Chart . . . . . 32**
**Section 10: Warranty . . . . . 33**

Please take our Customer Satisfaction SURVEY at landpride.com

© Copyright 2024 All rights Reserved

Land Pride provides this publication “as is” without warranty of any kind, either expressed or implied. While every precaution has been taken in the preparation of this manual, Land Pride assumes no responsibility for errors or omissions. Neither is any liability assumed for damages resulting from the use of the information contained herein. Land Pride reserves the right to revise and improve its products as it sees fit. This publication describes the state of this product at the time of its publication, and may not reflect the product in the future.

Land Pride is a registered trademark.

All other brands and product names are trademarks or registered trademarks of their respective holders.

*Printed in the United States of America.*

See previous page for Table of contents.

### *Parts Manual QR Locator*

**The QR (Quick Reference) code on the left will take you to the Parts Manual for this equipment. Download the appropriate App on your smart phone, open the App, point your phone on the QR code and take a picture.**

### *Dealer QR Locator*

**The QR code on the left will link you to available dealers for Land Pride products. Refer to Parts Manual QR Locator on this page for detailed instructions.**

**Listed below are common practices that may or may not be applicable to the products described in this manual.**

## *Safety at All Times*

**Careful operation is your best assurance against an accident.**

**All operators, no matter how much experience they may have, should carefully read this manual and other related manuals before operating the power machine and this attachment.**

- ▲ Thoroughly read and understand the "Safety Label" section. Read all instructions noted on them.
- ▲ Do not operate the equipment while under the influence of drugs or alcohol, as they impair your ability to safely and properly operate the equipment.
- ▲ The operator should be familiar with all functions of the tractor and attachment and be able to handle emergencies quickly.
- ▲ Make sure all guards and shields appropriate for the operation are in place and secured before operating the attachment.
- ▲ Keep all bystanders away from equipment and work area.
- ▲ Start tractor from the driver's seat with hydraulic controls in neutral.
- ▲ Operate tractor and controls from the driver's seat only.
- ▲ Never dismount from a moving tractor or leave tractor unattended with engine running.
- ▲ Do not allow anyone to stand between the attachment and tractor while connecting to the attachment.
- ▲ Keep hands, feet, and clothing away from power-driven parts.
- ▲ While transporting and operating equipment, watch out for objects overhead and along the sides such as fences, trees, buildings, wires, etc.
- ▲ Store attachment in a safe and secure area where children normally do not play. When needed, secure attachment against falling with support blocks.

## *Look for the Safety Alert Symbol*

**The SAFETY ALERT SYMBOL indicates there is a potential hazard to personal safety and extra precaution must be taken. When you see this symbol, be alert and carefully read the message that follows it. Hazard control, and accident prevention are dependent upon the awareness, concern, prudence, and proper training of personnel involved in the operation, transport, maintenance, and storage of equipment.**

### Be Aware of Signal Words

A signal word designates a degree or level of hazard seriousness. They are:

**DANGER:** Indicates a hazardous situation that, if not avoided, will result in death or serious injury.

**WARNING:** Indicates a hazardous situation that, if not avoided, could result in death or serious injury.

**CAUTION:** Indicates a hazardous situation that, if not avoided, may result in minor or moderate injury.

### Be Aware of Special Notices

Special notices are intended to point out important and helpful information that should be followed. They are usually placed inside a box. They are:

**IMPORTANT:** Indicates that equipment or property damage could result if instructions are not followed.

**NOTE:** Indicates supplementary explanations that will be helpful when using the equipment.

## Safety Precautions for Children

**Tragedy can occur if the operator is not alert to the presence of children. Children generally are attracted to attachments and their work.**

- ▲ Never assume children will remain where you last saw them.
- ▲ Keep children out of the work area and under the watchful eye of a responsible adult.
- ▲ Be alert and shut the attachment and tractor down if children enter the work area.
- ▲ Never carry children on the tractor or attachment. There is not a safe place for them to ride. They may fall off and be run over or interfere with the control of the power machine.
- ▲ Never allow children to operate the power machine, even under adult supervision.
- ▲ Never allow children to play on the power machine or attachment.
- ▲ Use extra caution when backing up. Before the tractor starts to move, look down and behind to make sure the area is clear.

## Tractor Shutdown & Storage

- ▲ If engaged, disengage power take-off.
- ▲ Park on solid, level ground and lower attachment until it is flat on the ground or on non-concrete support blocks.
- ▲ Put tractor in park or set park brake.
- ▲ Turn off engine and remove ignition key to prevent unauthorized starting.
- ▲ Relieve all hydraulic pressure to auxiliary hydraulic lines.
- ▲ Wait for all components to stop before leaving operator's seat.
- ▲ Use steps, grab-handles and anti-slip surfaces when stepping on and off the tractor.

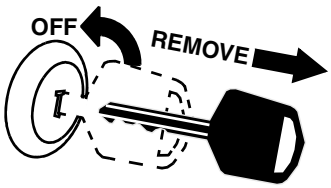

**Listed below are common practices that may or may not be applicable to the products described in this manual.**

## Dig Safe - Avoid Underground Utilities

- ▲ USA: Call 811
  CAN:
  http://www.clickbeforeyoudig.com
- ▲ Always contact your local utility companies (electrical, telephone, gas, water, sewer, and others) before digging so that they may mark the location of any underground services in the area.
- ▲ Be sure to ask how close you can work to the marks they positioned.

## Towing Safely

- ▲ Comply with federal, state, and local laws.
- ▲ Use towing vehicle and trailer of adequate size and capacity. Secure equipment towed on a trailer with chocks, tie downs, and chains.
- ▲ **IMPORTANT:** Do not tow a load that is more than double the weight of the vehicle towing the load.
- ▲ Sudden braking can cause a towed trailer to swerve unexpectedly. Reduce speed if trailer is not equipped with brakes.

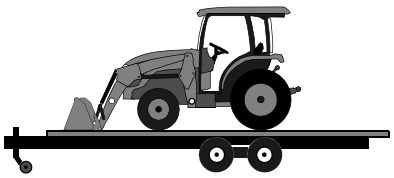

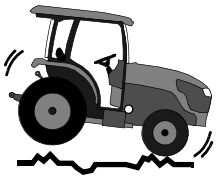

## Transport Safely

- ▲ Comply with federal, state, and local laws.
- ▲ Avoid contact with any overhead utility lines or electrically charged conductors.
- ▲ Always drive with attachment on the end of the loader arms low to the ground.
- ▲ Follow recommendations in the power machine Operator's Manual when driving uphill or downhill and when parking on an incline.
- ▲ Engage park brake when stopped on an incline.
- ▲ Never travel at a speed which does not allow adequate control of the load, steering, and stopping. Some rough terrains require a slower speed.

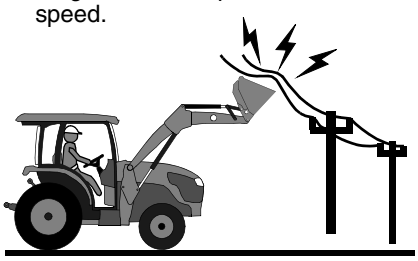

## Tire Safety

- ▲ Tire changing can be dangerous and must be performed by trained personnel using the correct tools and equipment.
- ▲ Always properly match the wheel size to the properly sized tire.
- ▲ Always maintain correct tire pressure. Do not inflate tires above recommended pressures shown in the Operator's Manual.
- ▲ When inflating tires, use a clip-on chuck and extension hose long enough to allow you to stand to one side and NOT in front of or over the tire assembly. Use a safety cage if available.
- ▲ Securely support the attachment when changing a wheel.
- ▲ When removing and installing wheels, use wheel handling equipment adequate for the weight involved.
- ▲ Make sure wheel bolts have been tightened to the specified torque.

## Practice Safe Maintenance

- ▲ Understand procedure before doing work. Refer to the Operator's Manual for additional information.
- ▲ Work on a level surface in a clean dry area that is well-lit.
- ▲ Lower attachment to the ground and follow all shutdown procedures before leaving the operator's seat to perform maintenance.
- ▲ Do not work under any hydraulically supported equipment. It can settle, suddenly leak down, or be lowered accidentally. If it is necessary to work under the equipment, securely support it with stands or suitable blocking beforehand.
- ▲ Use properly grounded electrical outlets and tools.
- ▲ Use correct tools and equipment for the job that are in good condition.
- ▲ Allow equipment to cool before working on it.
- ▲ Disconnect battery ground cable (-) before servicing or adjusting electrical systems or before welding on equipment.
- ▲ Inspect all parts. Make certain that parts are in good condition & installed properly.
- ▲ Replace parts on this attachment with genuine Land Pride parts only. Do not alter this attachment in a way which will adversely affect its performance.
- ▲ Do not grease or oil attachment while it is in operation.
- ▲ Remove buildup of grease, oil, or debris.
- ▲ Always make sure any material and waste products from the repair and maintenance of the attachment are properly collected and disposed.
- ▲ Remove all tools and unused parts before operation.

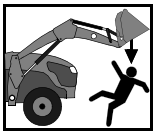

**Listed below are common practices that may or may not be applicable to the products described in this manual.**

## Prepare for Emergencies

- ▲ Be prepared if a fire starts.
- ▲ Keep a first aid kit and fire extinguisher handy.
- ▲ Keep emergency numbers for doctor, ambulance, hospital, and fire department near the phone.

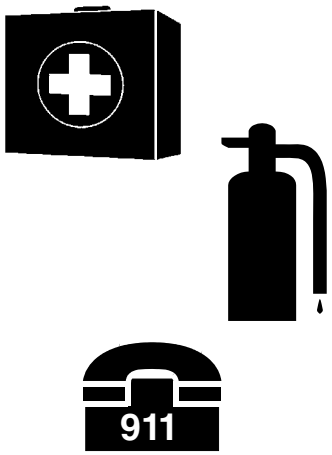


## Wear Personal Protective Equipment (PPE)

- ▲ Wear protective clothing and equipment appropriate for the job such as safety shoes, safety, glasses, hard hat, dust mask, and ear plugs.
- ▲ Clothing should fit snug without fringes and pull strings to avoid entanglement with moving parts.
- ▲ Prolonged exposure to loud noise can cause hearing impairment or hearing loss. Wear suitable hearing protection such as earmuffs or earplugs.
- ▲ Operating a machine safely requires the operator's full attention. Avoid wearing headphones while operating equipment.

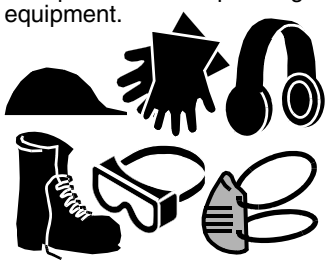

## Avoid High Pressure Fluids

- ▲ Escaping fluid under pressure will penetrate the skin or eyes causing serious injury.
- ▲ Relieve all residual pressure before disconnecting hydraulic lines or performing work on the hydraulic system.
- ▲ Make sure all hydraulic fluid connections are properly tightened/torqued and all hydraulic hoses and lines are in good condition before applying pressure to the system.
- ▲ Use a piece of wood or cardboard, NOT BODY PARTS, to check for suspected leaks.
- ▲ Wear protective gloves and safety glasses or goggles when working with hydraulic systems.
- ▲ **DO NOT DELAY.** If an accident occurs, seek immediate emergency medical care or gangrene may result.

## Use Safety Lights and Devices

- ▲ A slow moving power machine can create a hazard when driven on public roads. They are difficult to see, especially at night.
- ▲ Flashing warning lights and turn signals are recommended whenever driving on public roads.
- ▲ For tractors and other agriculture equipment, a Slow Moving Vehicle (SMV) sign is required when traveling on public roads.

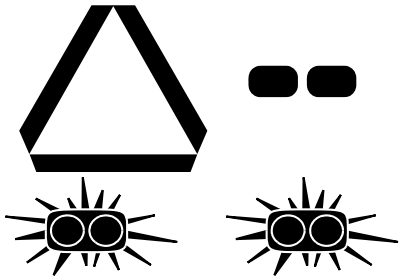

## Use Seat Belt and ROPS

- ▲ Land Pride recommends the use of a CAB or roll-over-protective-structures (ROPS) and seat belt in almost all power machines. Combination of a CAB or ROPS and seat belt will reduce the risk of serious injury or death if the power machine should be upset.
- ▲ If ROPS is in the locked-up position, fasten seat belt snugly and securely to help protect against serious injury or death from falling and machine overturn.

## Keep Riders Off Machinery

- ▲ Never carry riders on the power machine or attachment.
- ▲ Riders obstruct operator's view and interfere with the control of the power machine.
- ▲ Riders can be struck by objects or thrown from the equipment.
- ▲ Never use the power machine or attachment to lift or transport riders.

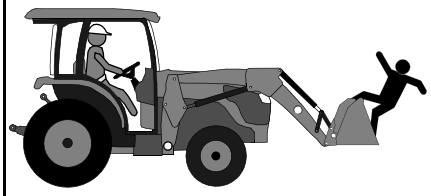

**These are common practices that may or may not be applicable to the products described in this manual.**

## Avoid Crystalline Silica (Quartz) Dust

**Because crystalline silica is a basic component of sand and granite, many activities at construction sites produce dust containing crystalline silica. Trenching, sawing, and boring of material containing crystalline silica can produce dust containing crystalline silica particles. This dust can cause serious injury to the lungs (silicosis).**

**There are guidelines which should be followed if crystalline silica (quartz) is present in the dust.**

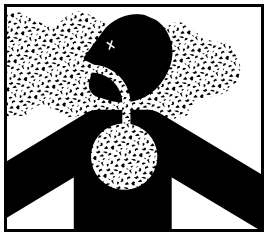

- ▲ Be aware of and follow OSHA (or other local, State, or Federal) guidelines for exposure to airborne crystalline silica.
- ▲ Know the work operations where exposure to crystalline silica may occur.
- ▲ Participate in air monitoring or training programs offered by the employer.
- ▲ Be aware of and use optional equipment controls such as water sprays, local exhaust ventilation, and enclosed cabs with positive pressure air conditioning if the machine has such equipment. Otherwise respirators shall be worn.
- ▲ Where respirators are required, wear a respirator approved for protection against crystalline silica containing dust. Do not alter respirator in any way. Workers who use tight-fitting respirators can not have beards/ mustaches which interfere with the respirator seal to the face.
- ▲ If possible, change into disposable or washable work clothes at the work site; shower and change into clean clothing before leaving the work site.
- ▲ Do not eat, drink, use tobacco products, or apply cosmetics in areas where there is dust containing crystalline silica.
- ▲ Store food, drink, and personal belongings away from the work area.
- ▲ Wash hands and face before eating, drinking, smoking, or applying cosmetics after leaving the exposure area.

## Handle Chemicals Properly

- ▲ Protective clothing should be worn.
- ▲ Handle all chemicals with care.
- ▲ Follow instructions on container label.
- ▲ Agricultural chemicals can be dangerous. Improper use can seriously injure persons, animals, plants, soil, and property.
- ▲ Inhaling smoke from any type of chemical fire can be a serious health hazard.
- ▲ Store or dispose of unused chemicals as specified by the chemical manufacturer.

This page left blank intentionally.

## Safety Labels

*Your Snow Trip Blade comes equipped with all safety labels in place. They were designed to help you safely operate your attachment. Read and follow their directions.*

1. *Keep all safety labels clean and legible.*
2. *Refer to this section for proper label placement. Replace all damaged or missing labels. Order new labels from your nearest Land Pride dealer. To find your nearest dealer, visit our dealer locator at www.landpride.com.*
3. *Some new equipment installed during repair requires safety labels to be affixed to the replaced component as specified by Land Pride. When ordering new components make sure the correct safety labels are included in the request.*
4. *Refer to this section for proper label placement.*
   *To install new labels:*
   a. *Clean the area the label is to be placed.*
   b. *Spray soapy water on the surface where the label is to be placed.*
   c. *Peel backing from label. Press firmly onto the surface.*
   d. *Squeeze out air bubbles with the edge of a credit card or with a similar type straight edge.*

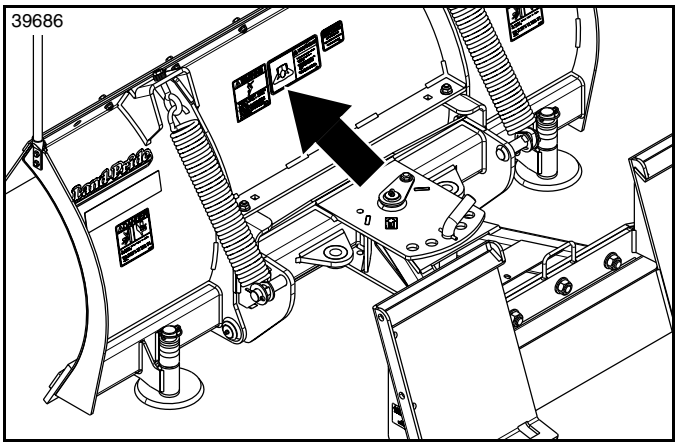


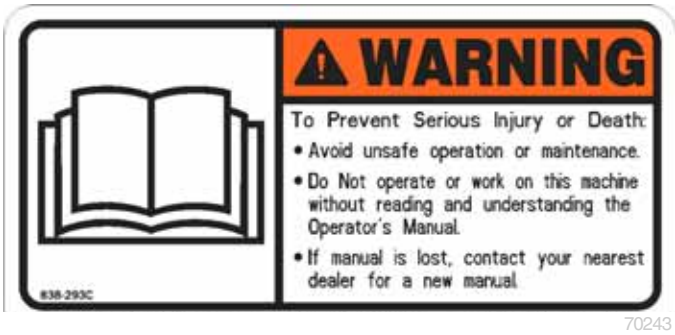


**838-293C**
Warning: Read Operator's Manual
1 Place

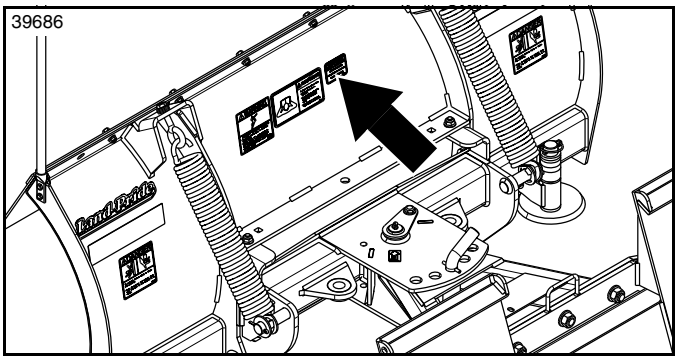

**858-692C**
Notice: Not Intended for Skid Steer or Track Loader Use
1 Place

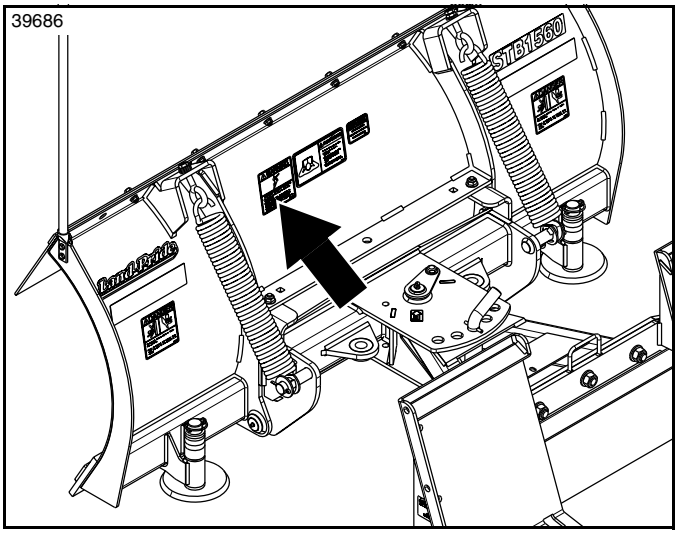

**858-817C**
Warning: Thrown Object Hazard
1 Place

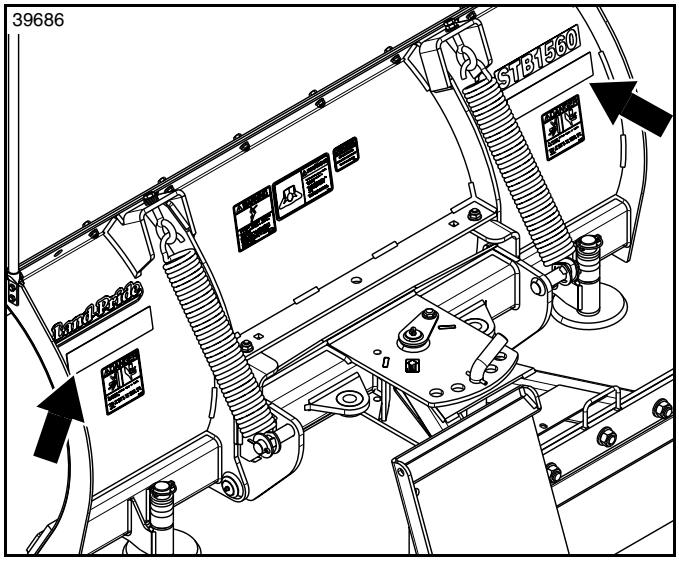

**838-614C**
Red Reflector: 2" x 9"
2 Places

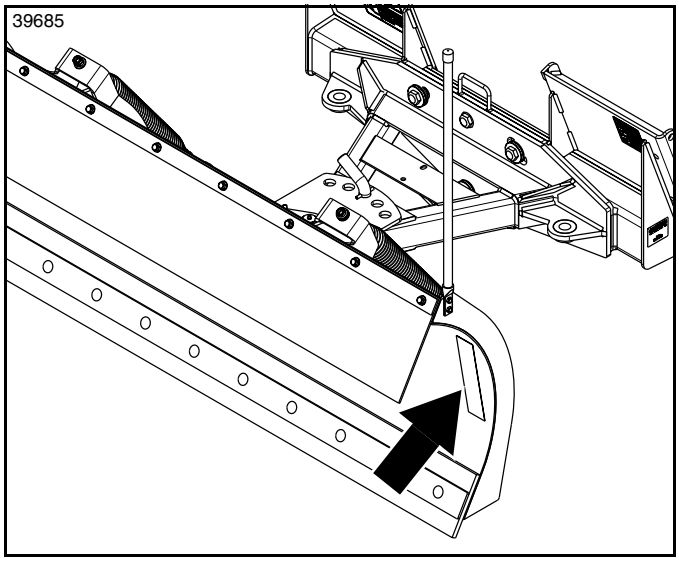

73138

**838-615C**
Amber Reflector: 2" x 9"
1 Place

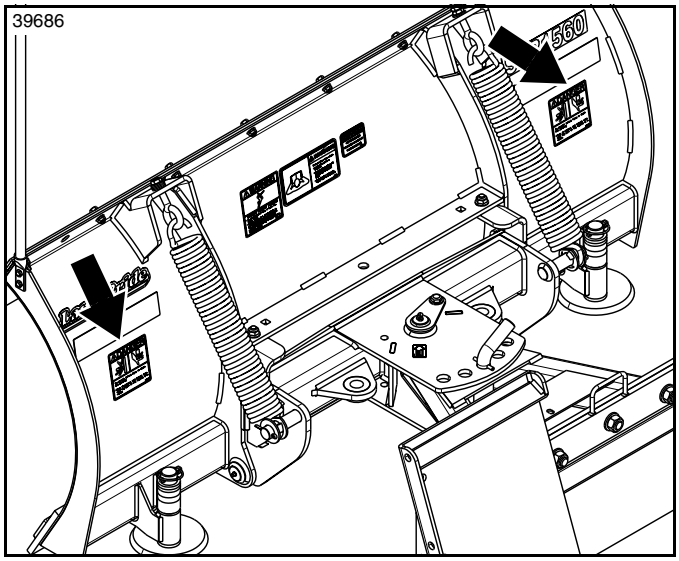


70400

**838-112C**
Danger: Pinch Point Hazard
2 Places

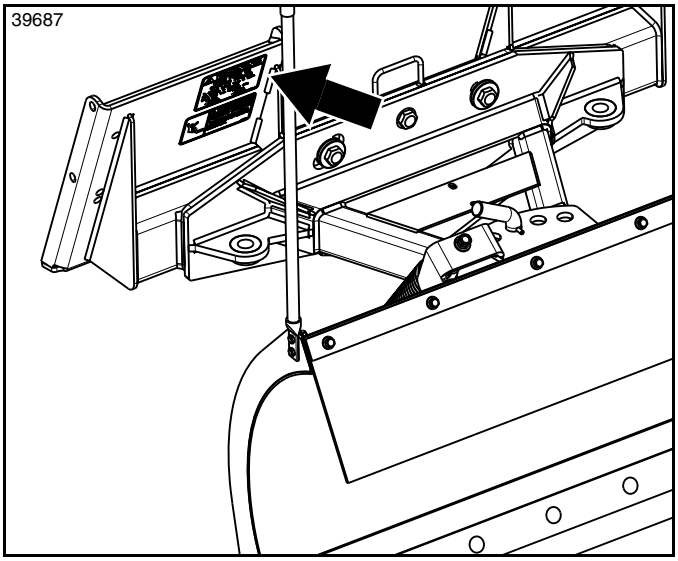


70312

**818-045C**
Warning: Pinch Point or Crushing Hazard
1 Place

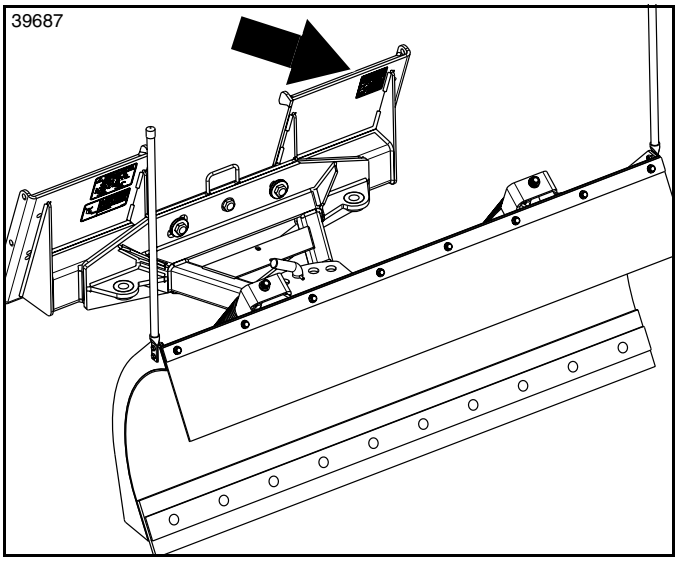


70641

**848-747C**
Warning: High Pressure Fluid Hazard
1 Place

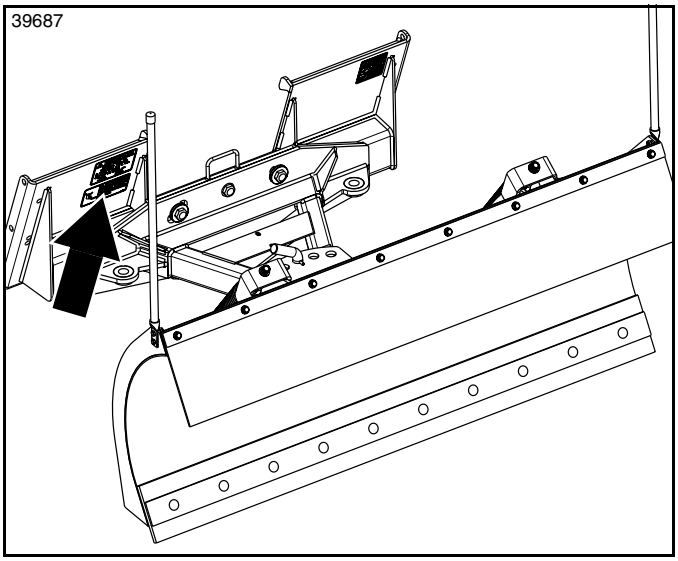

**844-342C**
Warning: Falling Hazard
1 Place

Land Pride welcomes you to the growing family of new product owners. This Snow Trip Blade has been designed with care and built by skilled workers using quality materials. Proper assembly, maintenance, and safe operating practices will help you get years of satisfactory use from this product.

## Application

The STB15 Series front-mounted Snow Trip Blades are designed and built by Land Pride to meet the needs of landscapers, construction companies, farmers, ranchers, landowners, school systems, and municipalities. The STB15 Series blades are adapted for quick-attach front mounting on 30 to 70 hp (22 to 52 kW) tractor loaders equipped with universal quick-attach hitch. These blades are primarily designed for snow removal operations in the forward operating mode only. They are also capable of pushing light aggregate materials such as pea gravel or livestock feed such as shelled or ground corn and silage. Their trip-blade design provides improved protection against blade damage when unexpected ground obstacles are encountered.

See **"Specifications & Capacities"** on page 29 and **"Features & Benefits"** on page 30 for additional information and performance enhancing options.

## Using This Manual

- This Operator's Manual is designed to help familiarize you with safety, assembly, operation, adjustments, troubleshooting, and maintenance. Read this manual and follow the recommendations to help ensure safe and efficient operation.
- The information contained within this manual was current at the time of printing. Some parts may change slightly to assure you of the best performance.
- To order a new Operator's or Parts Manual, contact your authorized dealer. Manuals can also be downloaded, free-of-charge, from our website at www.landpride.com

### Terminology

"Right" or "Left" as used in this manual is determined by facing the direction the machine will operate while in use unless otherwise stated.

## Owner Assistance

The dealer should complete the Online Warranty Registration at the time of purchase. This information is necessary to provide you with quality customer service.

The parts on your Snow Trip Blade have been specially designed by Land Pride and should only be replaced with genuine Land Pride parts. Contact a Land Pride dealer if customer service or repair parts are required. Your Land Pride dealer has trained personnel, repair parts, and equipment needed to service the attachment.

### Serial Number

For quick reference and prompt service, record model and serial number on the inside cover page and again on the warranty page. Always provide model number and serial number when ordering parts and in all correspondences with your Land Pride dealer. For location of your serial number plate, see Figure 1.

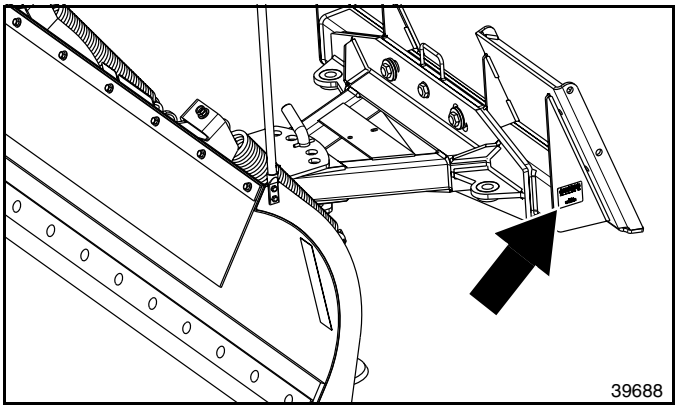


**Serial Number Plate Location**
**Figure 1**

### Further Assistance

Your dealer wants you to be satisfied with your new Snow Trip Blade. If for any reason you do not understand any part of this manual or are not satisfied with the service received, the following actions are suggested:

1. Discuss any problems you have with your attachment with your dealership service personnel so they can address the problem.
2. If you are still not satisfied, seek out the owner or general manager of the dealership, explain the problem, and request assistance.
3. For further assistance write to:

**Land Pride Service Department**
**1525 East North Street**
P.O. Box 5060
Salina, Ks. 67402-5060

E-mail address
lpservicedept@landpride.com

## Tractor Requirements

The Snow Trip Blade is designed to attach to tractor loaders equipped with a universal quick-attach hitch with the following requirements:

Horsepower Requirements. . . . .30-70 hp (22-52 kW)
Max. Tractor Weight . . . . . 8,000 lbs (3,629 kg)
Max. SAE Lift Capacity. . . . . 5,000 lbs (2,268 kg)
Max. Hydraulic Pressure. . . . . 3,000 psi (20.7 MPa)
Hydraulic Connections . . . . . 2 - Hydraulic Outlets

**IMPORTANT:** Ballast may need to be added to your tractor to maintain steering control and to prevent tipping. Refer to your tractor's operator manual to determine if additional ballast is needed.

## Torque Requirements

Refer to **"Torque Values Chart for Common Bolt Sizes"** on page 32 to determine correct torque values when tightening hardware.

## Before You Start

Make sure the intended tractor conforms to the requirements stated above. Also, read and understand this Operator's Manual for your Snow Trip Blade. An understanding of how it works will aid in its assembly and set-up.

Go through the **Pre-Assembly Checklist** before assembling the Snow Trip Blade. To speed up your assembly task and make the job safer, have all needed parts and equipment readily at hand.

### Pre-Assembly Checklist

| ✔ | Check | Reference |
|---|---|---|
| ☐ | Have a hoist, fork lift or loader with properly sized chains and safety stands capable of lifting and supporting the equipment on hand. | |
| ☐ | Have a minimum of two people available during assembly. | |
| ☐ | Make sure all major components and loose parts are shipped with the machine. | Assembly & Set-up |
| ☐ | Double check to make sure all parts, fasteners, and pins are installed in the correct location. Refer to the Parts Manual if unsure. By double checking, you will lessen the chance of incorrectly using a bolt that may be needed later.<br>**NOTE:** All assembled hardware from the factory has been installed in the correct location. Remember location of a part or fastener if removed. Keep parts separated. | Operator's Manual 301-493M<br><br>Parts Manual 301-493P |
| ☐ | Make sure working parts move freely, bolts are tight & cotter pins are spread. | Operator's Manual |
| ☐ | Make sure all safety labels are correctly located and legible. Replace if damaged. | Page 6 |
| ☐ | Make sure all red and amber reflectors are correctly located and visible when machine is in transport position. | Page 7 |
| ☐ | Make sure all grease fittings are in place and lubricated. | Page 28 |

## Tractor Shutdown Procedure

The following are basic tractor shutdown procedures. Follow these procedures and any additional shutdown procedures provided in your tractor Operator's Manual before leaving the operator's seat.

1. Reduce engine speed and shut-off all power to the attachment.
2. Park tractor and attachment on solid, level ground.
3. Lower attachment until it is flat on the ground or on non-concrete support blocks.
4. Put tractor in park or set park brake, turn off engine, and remove switch key to prevent unauthorized starting.
5. Relieve all hydraulic pressure to auxiliary hydraulic lines.
6. Wait for all components to come to a complete stop before leaving the operator's seat.
7. Use steps, grab-handles and anti-slip surfaces when stepping on and off the tractor.

## Cutting Edge Assembly

Land Pride offers two cutting edge options, steel cutting edge and poly cutting edge, for the Snow Trip Blade. The steel cutting edge for tougher applications and the poly cutting edge for applications where you want to be more gentle on the surface being bladed such as asphalt parking lots.

### Steel Cutting Edge Assembly

***Refer to* Figure 1-1:**

1. Locate steel cutting edge (#2) two plow bolts (#1) and two hex flange locknuts (#4).
2. On one end, insert plow bolt (#1) through cutting edge (#2) and moldboard (#3). Hand tighten flange locknut (#4).
3. Repeat step 2 for the opposite end.
4. Raise Snow Blade with a hoist and install remaining plow bolts (#1) and flange locknuts (#4).
5. Tighten nuts to proper torque and lower the Snow Trip Blade to level ground.

### Poly Cutting Edge Assembly

***Refer to* Figure 1-2:**

1. Locate poly cutting edge (#4), carriage bolts (#2), retaining plate (#1) and flanged locknuts (#3).
2. On one end, insert one carriage bolt (#2) through retaining plate (#1), cutting edge (#2), and moldboard (#5). Attach hex flange locknut (#3) and hand tighten.
3. Repeat step 2 for the opposite end.
4. Raise Snow Blade with a hoist and install remaining carriage bolts (#2) and flange locknuts (#3).
5. Tighten flange nuts to their proper torque and lower the Snow Trip Blade to level ground.

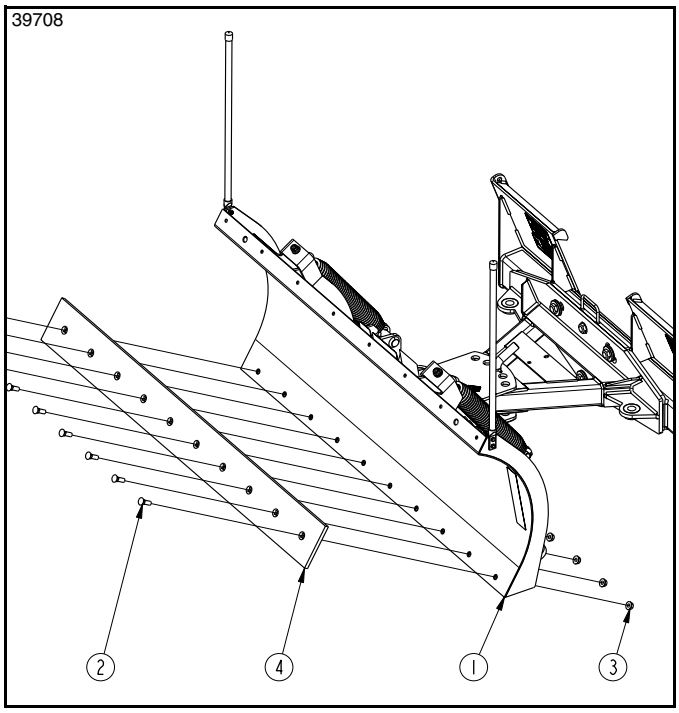


**Steel Cutting Edge Assembly**
**Figure 1-1**

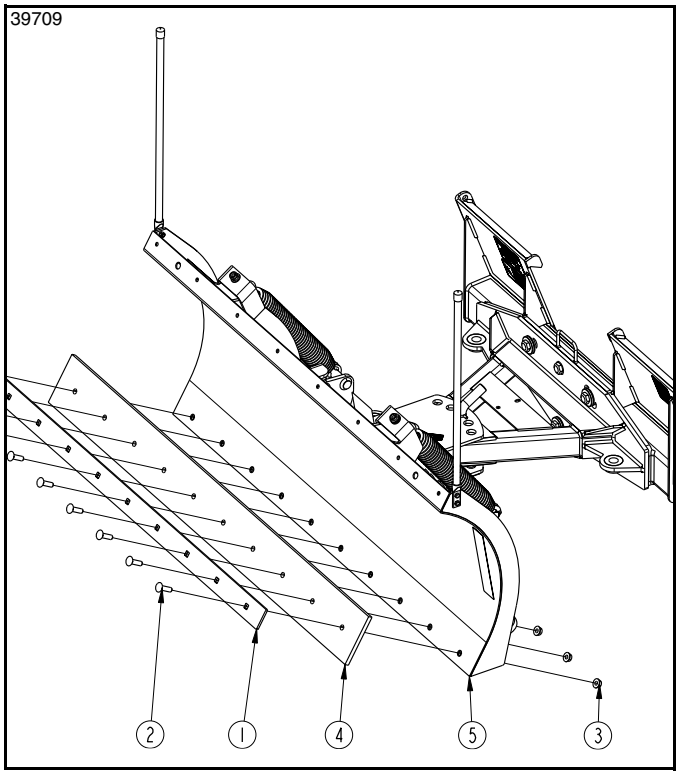


**Poly Cutting Edge Assembly**
**Figure 1-2**

## Orange Marker Assembly

***Refer to Figure 1-3:***

Land Pride offers 28" (71 cm) tall orange markers that can be bolted to each side of the moldboard. They are ideal for locating the outer ends of the blade when approaching buildings, trees, poles, and other obstacles that could be damaged and/or damage the Snow Trip Blade when hit.

1. Attach orange marker (#4) to outer left edge of moldboard (#1) with two 5/16"-18 x 1" GR5 hex head cap screws (#2) and hex nylock nuts (#3).
2. Tighten nuts to the correct torque.
3. Repeat steps 1 and 2 for the right side.

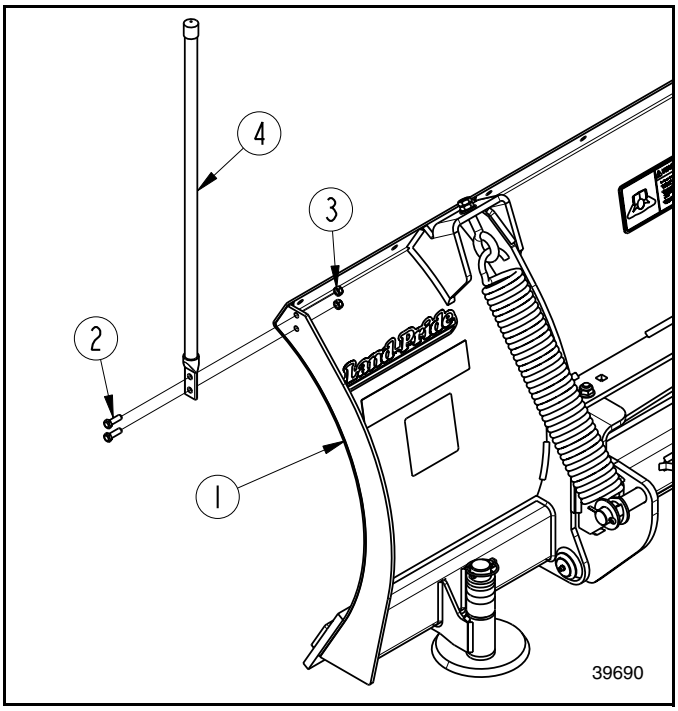


**Orange Marker Assembly**
**Figure 1-3**

## Angling Options Assembly

Land Pride offers three angling options for the Snow Trip Blade. The Snow Trip Blade must be equipped with one of the following three angling options.

**NOTE:** The STB1596 is only offered with dual cylinders and cushion valve option. The other two options are not available for the STB1596.

**WARNING**

*To prevent serious injury or death:*

*Hydraulic fluid under high pressure will penetrate the skin or eyes causing serious injury. Wear protective gloves and safety glasses or goggles when working with hydraulic systems. Use a piece of cardboard or wood, rather than hands, when searching for leaks. If an accident occurs, seek immediate emergency medical care or gangrene may result. DO NOT DELAY.*

**IMPORTANT:** Make sure threads and inside of fittings and hoses are clean.

### Bent Pin Assembly

***Refer to* Figure 1-4:**

1. Drive 1/4" x 1 3/4" roll pin (#1) through bent pin (#2).
2. Align holes on the pivot plate and hitch assembly to desired angle.
3. Push the bent pin assembly through holes as shown.

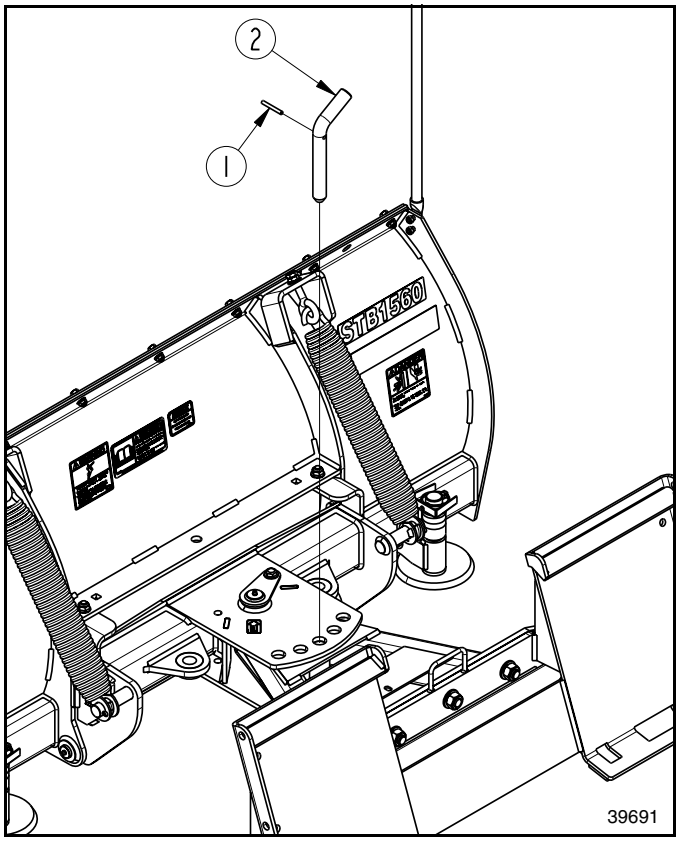


**Bent Pin Assembly**
**Figure 1-4**

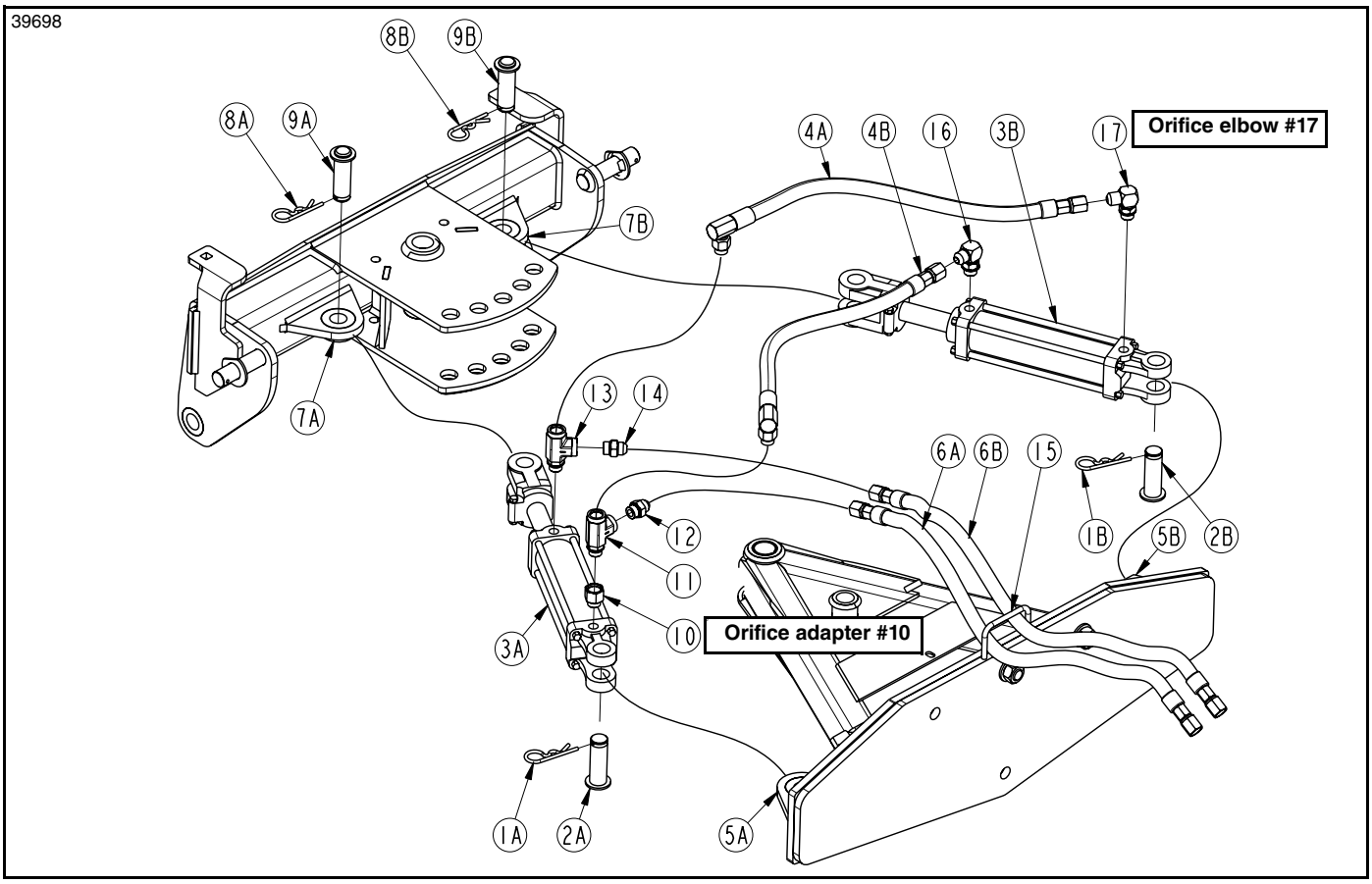


**Dual Cylinder Assembly**
**Figure 1-5**

## Dual Cylinder Assembly

***Refer to* Figure 1-5:**

1. Attach base end of hydraulic cylinder (#3A) to hitch assembly lug (#5A) with clevis pin (#2A) and hairpin (#1A).
2. Attach rod end of hydraulic cylinder (#3A) to pivot lug (#7A) with clevis pin (#9A) and cotter pin (#8A).
3. Attach base end of hydraulic cylinder (#3B) to hitch assembly lug (#5B) with clevis pin (#2B) and hairpin (#1B).
4. Attach rod end of hydraulic cylinder (#3B) to pivot lug (#7B) with clevis pin (#9B) and cotter pin (#8B).
5. Remove cylinder port plugs on both cylinders.
6. Locate adapter (#10) with a small orifice opening in one end. Attach that adapter to the base of hydraulic cylinder (#3A) and tighten.
7. Attach adapters (#12 & #14) to T-fittings (#11 & #13) and tighten.
8. Attach T-fitting (#11) to adapter (#10) and hand tighten.
9. Attach T-fitting (#13) to rod end of cylinder (#3A) and hand tighten.
10. Locate elbow (#17) with a small orifice opening in one end. Attach 25" hose (#4B) to orifice elbow (#18) and tighten.
11. Attach orifice elbow (#18) to the base of hydraulic cylinder (#3B) and hand tighten.
12. Attach 25" hose (#4A) to elbow (#16) and tighten.
13. Attach elbow (#16) to rod end of cylinder (#3B) and hand tighten.
14. Attach hose (#4A) to T-fitting (#11) and tighten.
15. Attach hose (#4B) to T-fitting (#13) and tighten.
16. Attach hoses (#6A & #6B) to adapters (#12 & #14) and tighten.
17. Thread hydraulic hoses (#6A & #6B) through hose retainer (#15).
18. Adjust hydraulic hoses and fittings as needed, then tighten all hoses and fittings.

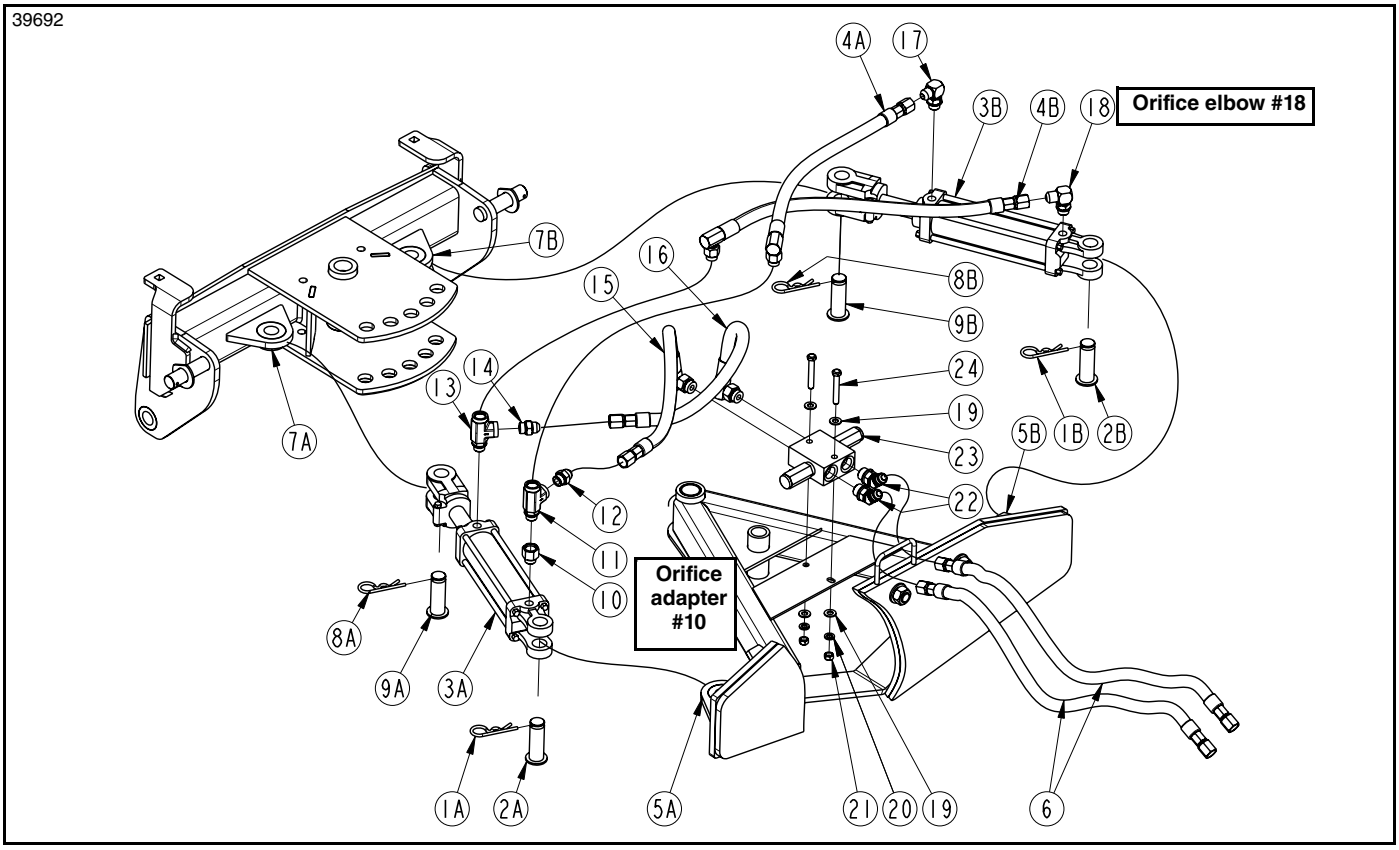


**Dual Cylinder with Cushion Valve Assembly**
**Figure 1-6**

## Dual Cylinder with Cushion Valve Assembly

***Refer to* Figure 1-6:**

1. Attach base end of hydraulic cylinder (#3A) to hitch assembly lug (#5A) with clevis pin (#2A) and hairpin (#1A).
2. Attach rod end of hydraulic cylinder (#3A) to pivot lug (#7A) with clevis pin (#9A) and cotter pin (#8A).
3. Attach base end of hydraulic cylinder (#3B) to hitch assembly lug (#5B) with clevis pin (#2B) and hairpin (#1B).
4. Attach rod end of hydraulic cylinder (#3B) to pivot lug (#7B) with clevis pin (#9B) and cotter pin (#8B).
5. Remove cylinder port plugs on both cylinders.
6. Locate adapter (#10) with a small orifice opening in one end. Attach that adapter to the base of hydraulic cylinder (#3A) and tighten.
7. Attach adapters (#12 & #14) to T-fittings (#11 & #13) and tighten.
8. Attach T-fitting (#11) to adapter (#10) and hand tighten.
9. Attach T-fitting (#13) to rod end of cylinder (#3A) and hand tighten.
10. Attach 18" hose (#15) to adapter (#12) and tighten.
11. Attach 18" hose (#16) to adapter (#14) and tighten.
12. Locate elbow (#18) with a small orifice opening in one end. Attach 25" hose (#4B) to orifice elbow (#18) and tighten.
13. Attach orifice elbow (#18) to the base of hydraulic cylinder (#3B) and hand tighten.
14. Attach 25" hose (#4A) to elbow (#17) and tighten.
15. Attach elbow (#17) to rod end of cylinder (#3B) and hand tighten.
16. Attach 45 degree elbows (#22) to cushion valve (#23) as shown and tighten.
17. Attach cushion valve (#23) to the hitch frame with 3/8-16X2 1/2 GR5 bolts (#24), flat washers (#19), lock washers (#20) and nuts (#21) as shown. Tighten nuts to the correct torque.
18. Attach hose (#15) to cushion valve (#23) and tighten.
19. Attach hose (#16) to cushion valve (#23) and tighten.
20. Attach hose (#4A) to T-fitting (#11) and tighten.
21. Attach hose (#4B) to T-fitting (#13) and tighten.
22. Attach hoses (#6) to 45 degree elbows (#22) and tighten.
23. Adjust hydraulic hoses and fittings as needed, then tighten all hoses and fittings.

## Tractor Hook-Up

***Refer to Figure 1-7:***

**CAUTION**

*To prevent serious injury:*

*Do not stand between tractor and attachment during hook-up.*

1. Make sure hydraulic hoses do not interfere with hitch hook-up.
2. Drive tractor slowly to the blade making sure the front hitch plate of the tractor is parallel with the blade hitch plate.
3. Tilt top of the loader hitch plate slightly forward and position top of hitch plate under the top angled bar on the Snow Trip Blade hitch plate.
4. Slowly lift loader hitch until the top angle bar and loader hitch have come together.
5. Push lock handles on the loader hitch down into locked position. Check to make sure that the lock pins go through the bottom slots of the Snow Trip Blade hitch plate.

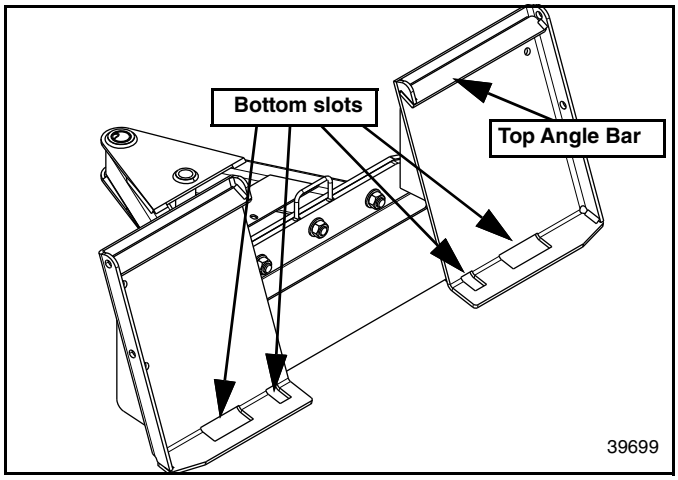


**Snow Trip Blade Hitch Plate**
**Figure 1-7**

## Hose Hook-up

**WARNING**

*To prevent serious injury or death:*

*Hydraulic fluid under high pressure will penetrate the skin or eyes causing serious injury. Wear protective gloves and safety glasses or goggles when working with hydraulic systems. Use a piece of cardboard or wood, rather than hands, when searching for leaks. If an accident occurs, seek immediate emergency medical care or gangrene may result. DO NOT DELAY.*

**IMPORTANT:** Make sure coupler fittings on hydraulic hoses and tractor are clean before connecting them together.

1. Route hydraulic hoses through the most convenient path to access your power equipment couplings.
2. Clean quick connect couplers of dirt and then connect couplers to the tractor remote outlets. Make sure quick connect couplers have fully engaged. If they have not, check the following:
   a. Make sure couplers are same size and type.
   b. Make sure hydraulic pressure has been released.
3. Extend and retract hydraulic cylinder with tractor controls. Switch hoses on tractor remote outlets if the Snow Trip Blade angles the opposite direction intended.
4. For additional help, refer to hydraulic hook-up in your tractor Operator's Manual.

## Equipment Clearances

It is important to check clearance before putting unit into operation. Make sure hoses are long enough and won't become pinched or entangled in the equipment. Also, make sure the Snow Trip Blade moldboard does not come in contact with tractor frame and tires by carefully going through its full range of motions.

1. Visually inspect hydraulic hoses for possible pinch points and shortness. Make hose adjustments before starting the machine.
2. Start tractor and raise blade off the ground approximately 12" (30 cm). If necessary, have someone stand nearby that can motion to the operator to stop if a problem develops.
3. Fully extend blade cylinder to angle blade left and then fully extend and retract hydraulic cylinders on end of loader arms while watching for interferences with hydraulic hoses and blade.
4. Fully retract blade cylinder and then fully extend and retract hydraulic cylinders on end of loader arms while watching for interferences with hydraulic hoses and blade.
5. Raise blade fully up and repeat steps 3 & 4 above.

## Purging Hydraulic System

**IMPORTANT:** The hydraulic cylinder and/or hoses can contain air and should be purged before use. Not purging the cylinder and hoses of air can cause uneven jerky cylinder movement.

1. With blade raised off the ground about 12" (30 cm), cycle hydraulic cylinders several times from fully extended to fully retracted.
2. If cylinder operates unevenly after cycling it several times, then purge the system as follows:
   a. Loosen hydraulic hose fittings at the rod end of the hydraulic cylinders.
   b. Slowly retract and extend the cylinders to purge any trapped air from the system.
   c. Tighten fittings when trapped air is removed.

## Skid Shoes

***Refer to Figure 2-1:***

The skid shoes mounted on the back of the moldboard should be adjusted vertically according to the surface they are running over. Doing so will reduce the chance of blade or surface damage during snow removal on gravel or loose stone driveways.

1. Operate your loader lift lever to raise the Snow Trip Blade off the ground high enough to remove skid shoes (#1).
2. Place support blocks under the cutting edge and lower the Snow Trip Blade until it rests on the blocks.
3. Shut tractor engine off see **"Tractor Shutdown Procedure"** on page 10.
4. Remove linchpin (#5) and linchpin protector (#4) from skid shoe (#1).
5. Adjust height up or down to your preference by adding or removing spacers (#3) from under the skid shoe mount (#2).

**NOTE:** For working snow, the skid shoes should be 3/8" to 3/4" (10 to 19 mm) below the bottom of the cutting edge. For working dirt, the skid shoes should be above the bottom of the cutting edge or removed.

6. Reattach the linchpin protector (#4) and linchpin (#5) to the skid shoe (#1).

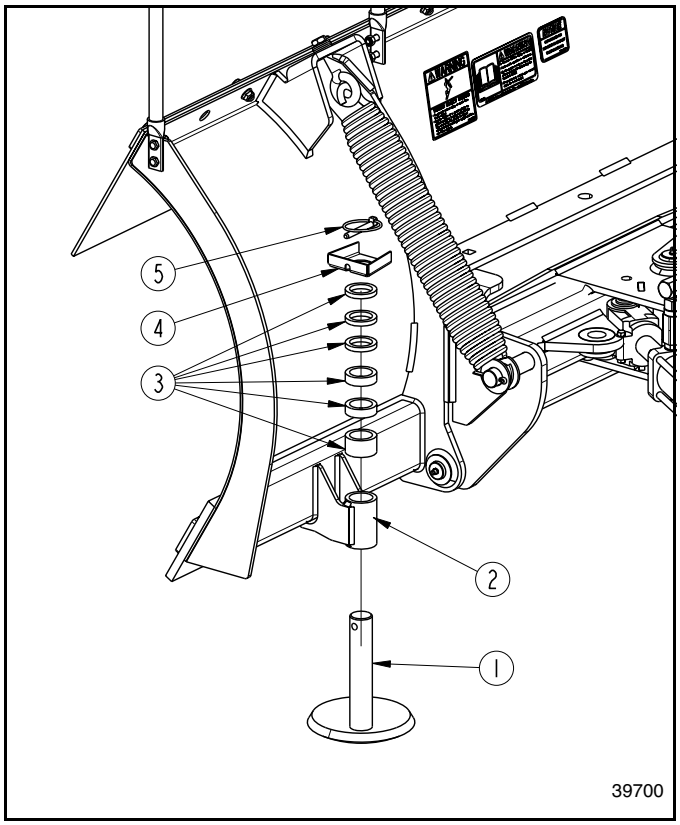


**Skid Shoe Adjustment**
**Figure 2-1**

## Locking and Unlocking Blade

***Refer to Figure 2-2:***

The Snow Trip Blade may also be used for pushing loose dirt and other light materials. The blade must be in the locked position to do so.

**NOTE:** When working snow, the blade must be unlocked. Bolts (#1) and nuts (#2) should be assembled in holes (A) to prevent misplacing them.

**NOTE:** Do not operate the Snow Trip Blade in the unlocked position when working loose dirt or similar materials.

**IMPORTANT:** Attempting to work undisturbed soil, heavy materials or similar items can damage the Snow Trip Blade and will void all warranties.

1. Rest the Snow Trip Blade on level ground.
2. Shut tractor engine off and remove switch key.
3. To lock the Snow Trip Blade for working loose dirt and other light material, use 1/2-13 X 1 1/2 GR5 round head square neck bolts (#1) through holes (B) as shown and fasten with hex flanged whiz nuts (#2).
4. Tighten to correct torque.

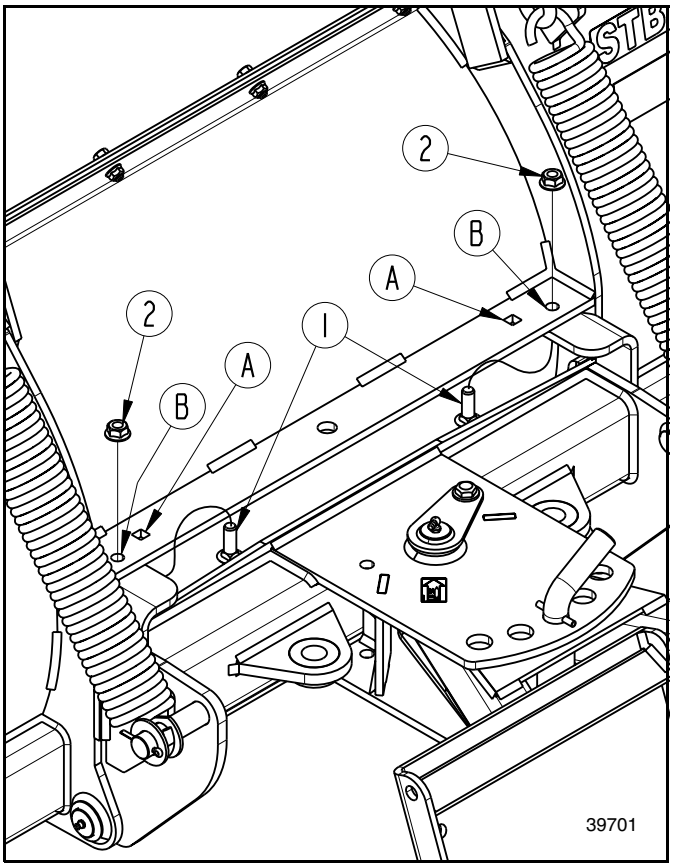


**Locking/Unlocking Blade**
**Figure 2-2**

## Manual Angle Adjustment

***Refer to Figure 2-3:***

Holes are provided for angling the blade on each side of center in 15° increments up to 30° for the Snow Trip Blade.

> **NOTE:** The STB1596 is not offered with a bent pin. Therefore, the blade angle can not be adjusted manually on the STB1596.

### DANGER

*To prevent serious injury or death:*

*Always check all blade hardware for tightness before moving or working around the unit. Make sure moldboard is secured with hex slotted nut and cotter pin. If cotter pin is missing, the slotted nut can unscrew allowing the moldboard to fall from its pivot mount.*

### WARNING

*To prevent serious injury or death:*

*Do not come in contact with turntables or stick objects into the turntable holes while adjusting the unit's angle. Doing so can pinch or shear body extremities and objects.*

> **IMPORTANT:** The Snow Trip Blade must be hitched to a tractor and raised a few inches off the ground to make the following adjustment.

1. Operate your loader lift lever to raise the Snow Trip Blade off the ground high enough to pivot the blade.
2. Set blocks under the hitch plate assembly (A) and lower the Snow Trip Blade on to the blocks.
3. Shut tractor engine off and remove switch key.
4. Pull bent pin (#1) and rotate blade (#3) to the left or right.
5. When blade is at desired angle, reinsert bent pin in center hole location (#2) as shown.

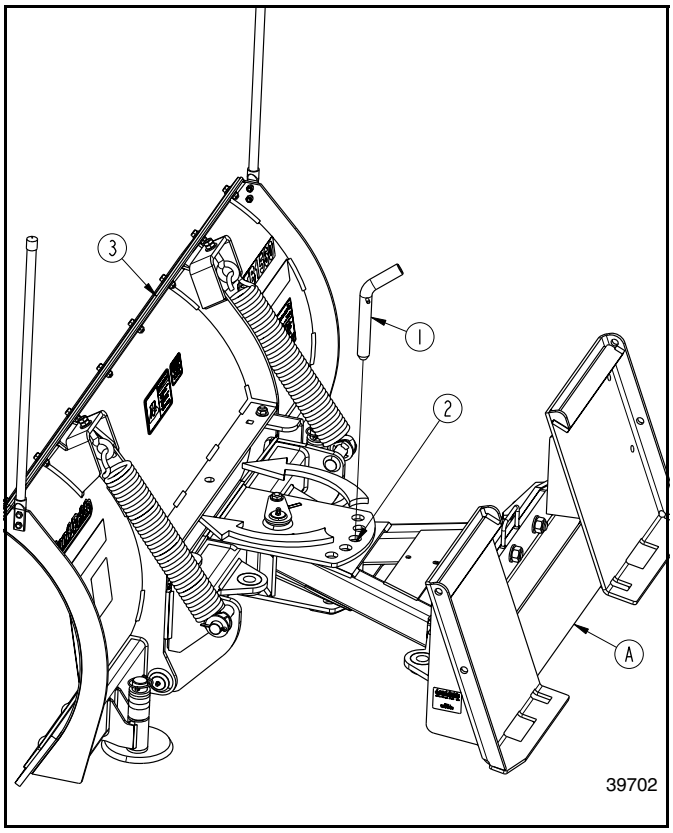


**Manual Angle Adjustment**
**Figure 2-3**

## Spring Adjustment

***Refer to* Figure 2-4:**

Over time and use, the springs on the Snow Trip Blade can become stretched and/or loosened. Periodically check to see if the springs (#5) on the Snow Trip Blade are loose. Tighten the 2 nuts (#1) on eye bolt (#4) so that the spring is tight and not loose. Adding extra flat washers (#2) to the existing flat washer (#3) may be necessary to stretch the springs tight.

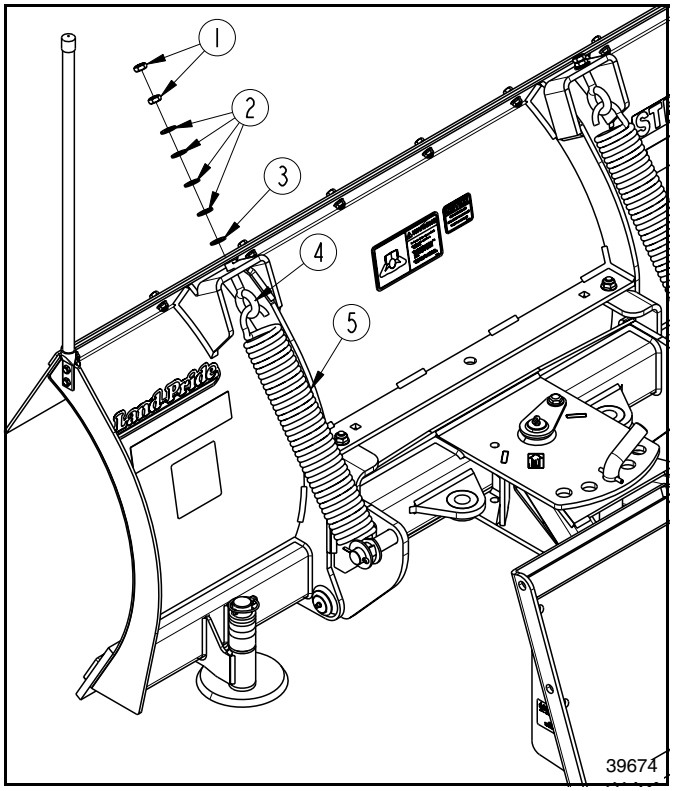


**Spring Adjustment**
**Figure 2-4**

## Pre-Start Checklist

Hazard control and accident prevention are dependent upon the awareness, concern, prudence, and proper training involved in the operation, transport, storage, and maintenance of the Snow Trip Blade. Therefore, it is absolutely essential that no one operates the Snow Trip Blade unless they have read, fully understood, and are totally familiar with the Operator's Manual. Make sure the operator has paid particular attention to:

Perform the following inspections before using your Snow Trip Blade.

### Operating Checklist

| ✔ | Check | Page |
|---|---|---|
| | Read & follow all safety rules & safety decals carefully. Refer to "Important Safety Information". | 1 |
| | Make sure all guards and shields are in place. Refer to "Important Safety Information". | 1 |
| | Read & follow hook-up & preparation instructions. Refer to "Section 1: Assembly & Set-up". | 10 |
| | Read & make all required adjustments. Refer to "Section 2: Adjustments". | 16 |
| | Read and follow all operating procedures. Refer to "Section 3: Operating Procedures". | 18 |
| | Read & follow all maintenance instructions. Refer to "Section 5: Maintenance & Lubrication". | 25 |
| | Read & follow all lubrication instructions. Refer to "Lubrication Points". | 28 |
| | Check the Snow Trip Blade initially and periodically for loose bolts and pins. Refer to "Torque Values Chart". | 32 |

## General Safety Information

***Refer to Figure 1-1 on page 11:***

**CAUTION**

*To prevent serious injury:*

- *Always check that all hardware is where it should be and tightened before using the Snow Trip Blade. The moldboard can fall off if slotted nut (#3) and cotter pin (#4) are missing.*
- *Do not let children operate the attachment.*
- *Allow only persons to operate this attachment who have fully read and comprehended this manual, and who have been properly trained in the safe operation of this attachment. Serious injury or death can result from failure to read, understand, and follow instructions provided in this manual.*
- *Never allow passengers on the tractor or carry a rider on the attachment.*
- *Always dress to stay warm in cold weather. Never allow your body or extremities to become too cold. If you are getting cold, go inside to warm-up before continuing.*
- *Always exercise safety, courtesy, and common sense. Be aware of pedestrian and vehicle traffic. Check blind spots before moving equipment. Move snow during low-traffic hours.*
- *Make sure all safety labels are in their proper location and in good readable condition before operating.*
- *Keep blade properly attached to the power equipment when in use.*
- *Keep hands, feet, hair, and clothing away from moving parts and pinch points.*
- *The Snow Trip Blade is designed primarily for moving snow. It may also be used to move small amounts of light aggregate materials such as pea gravel, grain, and loose soil. The blade must be locked to do so. See* **"Locking and Unlocking Blade"** *on page 16. Do not use the blade to move undisturbed soil, heavy materials, gravel, rocks, or similar items.*
- *Protect against equipment falling unexpectedly. Lower blade to ground or securely block blade up with blocks before servicing or working under and around the unit.*
- *Do not alter the Snow Trip Blade in any manner.*
- *Use the Snow Trip Blade for its intended purpose only.*
- *Always wear seat belt when moving.*
- *Make sure controls are all in neutral position before starting the tractor.*
- *Do not move snow at high speeds. High speeds can result in sudden loss of control leading to damaged property, equipment, and bodily harm.*
- *Do not hit solid objects with the blade. Mark locations of all curbs, hydrants, stumps, and other obstructions in the area that can damage the equipment and property when hit.*

## Pre-Operation Inspection

1. Shut tractor off. See **"Tractor Shutdown Procedure"** on page 10. Be sure to relieve all pressure in the hydraulic lines and wait for all moving parts to come to a complete stop before dismounting from the tractor.
2. Visually check for excessive wear and loose parts. Replace worn, damaged, or cracked parts with genuine Land Pride parts.
3. Inspect all connections for leaks. Tighten any connections that are loose.
4. Inspect hydraulic hose for pinch points that can damage the hose during operation and for sufficient length and equipment clearances. See **"Equipment Clearances"** on page 15.
5. Check all controls and operating functions of the tractor.

## Snow Trip Blade Functions

**Raising & Lowering The Trip Blade**
Use loader arms to raise and lower the Trip Blade. Often the arms are set to float so that the Snow Trip Blade can float over the terrain while riding on the skid shoes.

**Tilting the Trip Blade**
Operate cylinders at the front of the tractor loader arms to tilt the Snow Trip Blade forward or backward. Do not tip the Snow Trip Blade forward to apply down pressure as this will cause the Snow Trip Blade to ride up over the snow and will trip the blade.

**Angling the Trip Blade Equipped with Hydraulics**
Angle the Snow Trip Blade to push product to the side by operating the tractor hydraulic lever. Move the lever in one direction to push product to the left and in the opposite direction to push product to the right. Release the lever when the moldboard is at the preferred angle. Switch on tractor remote outlets hoses if lever action is opposite of what is preferred.

**Angling the Trip Blade Manually with Bent Pin**
There are 5 hole settings that move the blade angle in 15 degree increments. Pull the bent pin and select the preferred angle for your operation, push the bent pin through the hole.

**Floating the Trip Blade**

***Refer to Figure 3-1:***

The Snow Trip Blade comes with a side float feature that allows the blade to follow the ground contour. The float pivots about bolt (A) and has a maximum blade tilt of 5 degrees clockwise or counter clockwise. Lock float feature with blade straight across when pushing light materials, transporting, working around the machine, and when storing it. Unlock the float feature when working snow.

## Float Lock and Unlock

***Refer to Figure 3-2:***

**CAUTION**

*To prevent serious injury:*

*Always lock the float feature when transporting from one site to another, when working on or around the Snow Trip Blade, and when storing the machine. An unlocked blade can suddenly rotate causing injury or damage to the equipment.*

### From Locked To Float

1. Raise the Snow Trip Blade up approximately 4" to 6" off the ground.
2. Shut down the tractor properly. See **"Tractor Shutdown Procedure"** on page 10
3. Set blocks under both ends of blade.
4. Loosen and remove 3/4"-10 x 2" bolt (#3), locknut (#1) and flat washers (#2) from hole (B).
5. Fasten bolt (#3), locknut (#1) and washers (#2) to storage hole (C).

### From Float To Locked

1. Raise Snow Trip Blade up approximately 4" to 6" (10 to 15 cm) off the ground.
2. Shut down the tractor properly. See **"Tractor Shutdown Procedure"** on page 10
3. Loosen and remove bolt (#3), locknut (#1) and washers (#2) from storage hole (C).
4. Orient blade by hand to be level.
5. Fasten 3/4"-10 x 2" bolt (#3), locknut (#1) and flat washers (#2) to hole (B) and tighten to correct torque.

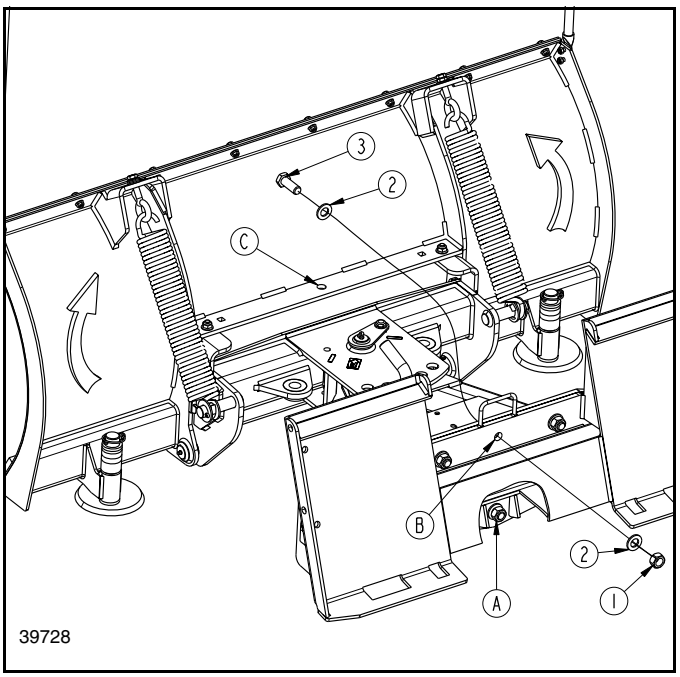


**Float Lock and Unlock**
**Figure 3-1**

## Transporting

**DANGER**

*To prevent serious injury or death:*

*Do not allow the blade to cross over the center line of a public road. Oncoming traffic can hit the blade resulting in personal injury, loss of life, and damage to equipment.*

**WARNING**

*To prevent serious injury or death:*

*When traveling on public roads at night or during the day, use accessory lights and devices for adequate warning to operators of other vehicles. Comply with all federal, state, and local laws.*

1. Raise the Snow Trip Blade to a safe traveling height that does not block your view.
2. Set hydraulic flow to off or neutral to prevent accidental lowering of the blade. Never adjust the Snow Trip Blade while traveling.
3. Select a safe ground speed when transporting from one area to another.
4. Be sure to reduce ground speed when turning and leave enough clearance so the blade does not contact obstacles such as buildings, trees, or fences.
5. When traveling on roadways, transport in such a way that faster moving vehicles may pass you safely.
6. Shift to a lower gear when going over rough or hilly terrain.

## Operating Guidelines

Removing snow with your blade can be made easier by following some simple guidelines.

- Allow any blade that is kept in warm storage to cool before moving snow. Snow will freeze to a warm blade making snow removal difficult.
- Stay current with your snow removal. Fresh snow is much easier to remove.
- Push first snows far enough away to allow space for future snow falls.
- Do not overload equipment. Push only as much snow as equipment can safely and easily handle. Snow that has become deep and/or compacted may require several passes.
- Be aware of equipment overheating. Allow time for equipment to cool if it is overheating.
- Accelerate slowly when starting a pass to allow time for tire traction and for snow to accumulate in front of the blade.
- Reduce speed when coming to the end of a pass and when needed.
- Never pile snow on someone else's property, streets, or sidewalks.
- Check with local regulations before pushing snow across roadways. This may be illegal in your area.
- Never pile snow near fire hydrants, mailboxes, water drains, electrical boxes, or handicapped parking areas.
- Never pile snow where it obstructs visibility of traffic.

## Pushing Light Aggregate Materials

The Snow Trip Blade is also designed to push light aggregate materials such as pea gravel, light dirt work, and live stock feed such as shelled or ground corn and silage.

**WARNING**

*To prevent serious injury or death:*

*If the blade is not locked while using on loose dirt or other light materials, there is a possibility of hitting an uneven patch, tripping the blade and capturing material on the back of the blade when it is tripped down, and flinging material back at the operator when the blade resets.*

**IMPORTANT:** When working materials other than snow, the float feature must be locked. See page 19 for locking and unlocking instructions.

**IMPORTANT:** When working materials other than snow, the blade must be locked. See page 16 for locking and unlocking instructions.

## Plowing Snow

The Snow Trip Blade is primarily designed for snow removal in the forward operating only. The blade design provides improved protection against blade damage when unexpected ground obstacles are encountered.

### DANGER

*To prevent serious injury or death:*

- *Do not carry riders on/in the power equipment and/or on the Snow Trip Blade.*
- *Do not drive up to anyone standing in front of a fixed object such as a wall or bench. Never assume the brakes will stop the power equipment in time.*

### WARNING

*To prevent serious injury or death:*

- *Never allow anyone near the Snow Trip Blade during use.*
- *Always wear your seat belt when using the Snow Trip Blade. Not taking these precautions can cause serious personal injury if the blade was to come in contact with a solid object.*

**IMPORTANT:** For best performance and to prevent damage of the Snow Trip Blade, keep the frame and turntable parallel with the ground. See **Figure 3-1**.

**IMPORTANT:** When pushing snow into a pile, always do so with blade in the straight forward position. Piling snow with the blade angled can damage the blade and tractor.

**IMPORTANT:** When working snow, the blade must be unlocked. See page 16 for locking and unlocking instructions.

1. When possible, thoroughly inspect the area to be plowed ahead of a snowfall. Otherwise, search the area thoroughly for potential problems before moving the snow.
   a. Mark all potential obstructions with stakes or flags that can be seen above the snow.
   b. Identify emergency equipment and utility outlets that will need quick access. Make a plan on how to clear the area so that emergency crews can access them quickly in the event of a storm.
   c. Identify areas where snow can be piled safely without obstructing traffic visibility and without obstructing access to fire hydrants, utilities, mailboxes, property, and parking areas. Also, don't pile snow on streets, sidewalks, or someone else's property without permission from the proper authorities.
   d. Identify tight areas that will be hard to turn around in and make a plan for clearing such areas.
2. Adjust bottom of the skid shoes to be about 3/8" to 3/4" (10 to 19 mm) below the blade cutting edge when working snow. On soft surfaces such as gravel or dirt, set skid shoes closer to 3/4" (10 cm). On hard surfaces such as asphalt or concrete, set the skid shoes closer to 3/8" (19 cm).
3. Set loader lift arms to float so that the skid shoes and blade can follow the contour of the ground.
4. Set blade angle straight if pushing snow into a pile. Set blade angle left or right if moving snow to one side.
5. Lower blade down and drive forward. When at the end of travel, raise blade up and back tractor up to get a new load of snow.
   - **Straight Blade:** Push snow up into piles by setting the blade straight and pushing snow towards the pile. Raise the blade up slowly while pushing the snow onto the pile to make pile higher and bigger.
   - **Angling the Blade:** Clear large lots of snow by setting the blade at an angle and making a single path through the lot. Then make successive passes pushing the snow to the outer edges of the lot.
   - **Unmanageable Snow**: Remove snow before it accumulates too deep or becomes too wet. Wet snow weighs around 12 lbs (5 kg) per cubic ft. and will add several tons of weight to push. Deep snow is heavy and unmanageable to move; both cost time and wear on equipment.

     Raise blade up to shear off the top 6" (15 cm) layer. Lower blade 6" (15 cm) to clear off another layer. Continue lowering blade until a working area is cleared. Then work small areas making multiple passes pushing snow to the outer edges. Use the following as a guide line:

     6" Snow: Use full blade width to push snow.
     9" Snow: Use 3/4 blade width to push snow.
     12" Snow: Use 1/2 blade width to push snow.

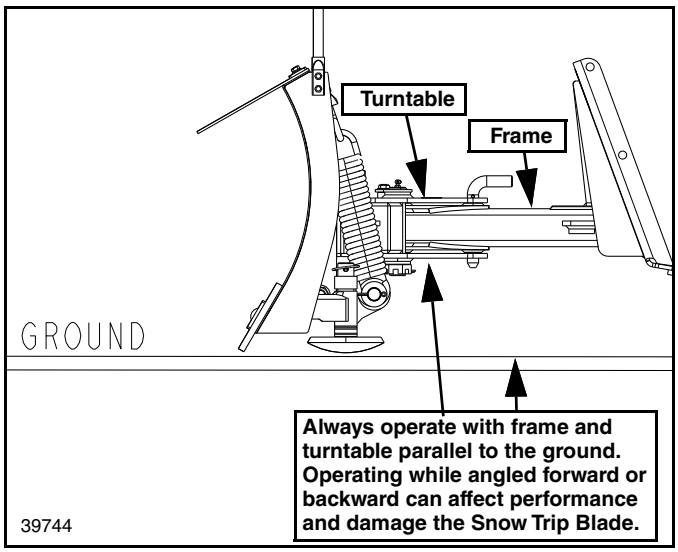


**Snow Trip Blade Hitch Plate**
**Figure 3-1**

## Unhooking the Blade

***Refer to Figure 3-2:***

1. Park tractor with Snow Trip Blade on a flat, level, solid surface.
2. Properly shut tractor down. See **"Tractor Shutdown Procedure"** on page 10
3. Orient blade level and lock the float feature to prevent sudden shifting of unit while working on or around it. See **"Float Lock and Unlock"** instructions on page 19
4. If the Snow Trip Blade is equipped with hydraulics, uncouple hydraulic hose fittings from the tractor. Store hose ends on the Snow Trip Blade.
5. Pull lock handles up to remove pins from bottom slots in hitch plate.
6. Tilt bottom of the tractor hitch plate slightly back towards the power equipment.
7. Slowly lower tractor hitch until the top angle bar and tractor hitch have separated.
8. Back tractor slowly away from the Snow Trip Blade making sure it does not interfere with the Snow Trip Blade hitch plate and hydraulic hoses.

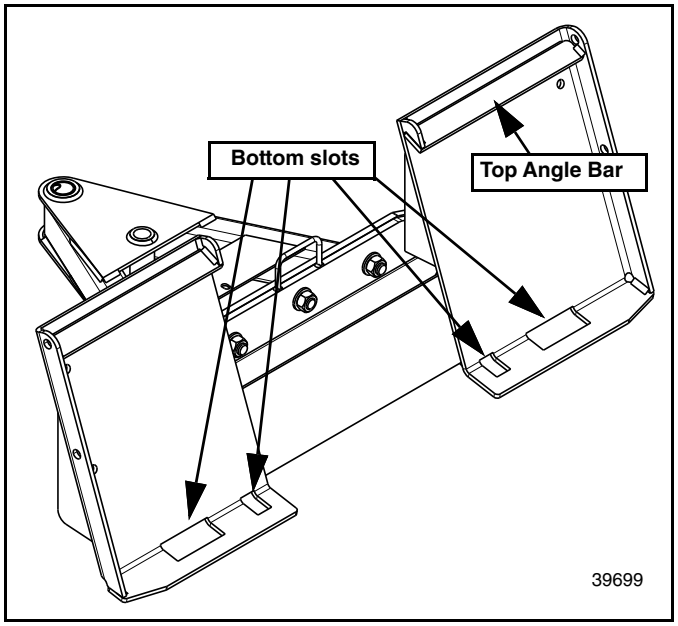


**Snow Trip Blade Hitch Plate**
**Figure 3-2**

## General Operating Instructions

Once you have familiarized yourself with the Operator's Manual, completed the operations checklist, and properly attached your Land Pride STB15 Series Snow Trip Blade to your tractor loader, you are now almost ready to begin work. The STB15 Series Snow Trip Blades were designed and built by Land Pride for 30 to 70 hp (22 to 52kW) tractors with a loader using the universal quick-attach hitch. They are ideal for snow removal as well as lighter dirt leveling, finish grading, and backfilling applications around feedlots, outdoor arenas, building sites, and smaller gravel spreading operations on farm and ranch lanes or roadways. They are also excellent for pushing livestock feed such as shelled or ground corn or silage. Hopefully, you have checked out your work site for any obstacles that you wouldn't want to damage or encounter. Marking stakes should be placed to help you avoid obstacles buried in the snow or to help establish push-back limits for snow piles.

The STB15 Series front-mounted blades have spring protection designed in to provide an added measure of safety. Should you strike an immovable object in your path, the entire blade assembly will tilt forward until you are clear of the obstacle. When the obstacle is passed over, the blade will automatically reset itself to working position. Because of the potential to encounter buried obstacles in the snow, Land Pride insists that all operators of these blades wear seat belts for their own personal safety.

If you have the blade set at an angle, the accumulated snow or material will begin to move outward toward the trailing edge of the blade. The greater the angle the more quickly the accumulation will be distributed off to the side. When pushing snow or aggregate materials into a pile, it is usually best to raise the blade at the last minute in order to push the upper portion of the pile even further back. For best performance and to prevent damage of the Snow Trip Blade, keep the frame and turntable parallel with the ground. See **"Figure 3-1"** on page 21. Ground speeds for snow removal functions are best done at an approximate 2 to 4 mph (3.2-6.4km/h) ground speed. Blading snow on an uneven surface may warrant a slower speed to minimize the tilting and reseting of the blade. Becoming proficient with a front blade takes some practice. Tractor horsepower, your personal skill level, depth and weight of the snow, traction conditions, soil, or aggregate composition, moisture levels, and compaction factors will all have a definite impact on how easily and effectively you get the job done. Develop a plan to achieve your expected results. Set the blade up at the proper angle to do the job. This may require some experimentation to achieve the desired results. Remember that this blade is designed for forward operation only.

With a little practice you should become a very good operator and consistently achieve the desired results you expect with your Land Pride STB15 Series Snow Trip Blade. See the **"Features and Benefits"** section or the **"Product Specifications"** section for additional information and performance enhancing options.

## Steel and Poly Cutting Edge Options

***Refer to Figure 4-1:***

Land Pride offers two types of cutting edge options, steel cutting edge (#1) and poly cutting edge (#2). Use the steel cutting edge for tougher applications and the poly cutting edge for applications where you want to be more gentle on the surface being bladed such as asphalt parking lots. See **"Cutting Edge Removal and Installation"** instructions on page 25 when changing the cutting edges.

### Part Number & Description

**Steel And Poly Cutting Edges**

| | |
|---|---|
| 301-479A | STB1560 Steel Cut Edge Package |
| 301-487A | STB1560 Poly Cut Edge Package |
| 301-480A | STB1572 Steel Cut Edge Package |
| 301-488A | STB1572 Poly Cut Edge Package |
| 301-481A | STB1584 Steel Cut Edge Package |
| 301-489A | STB1584 Poly Cut Edge Package |
| 301-482A | STB1596 Steel Cut Edge Package |
| 301-490A | STB1596 Poly Cut Edge Package |

## Deflector Flap Option

***Refer to Figure 4-2:***

Land Pride offers a 12" wide deflector flap mounted on the moldboard to prevent snow from going over the moldboard.

1. Attach 12" wide deflector flap (#4) to the top front flange of the moldboard (#5) with deflector backing bar (#1), ten 3/8"-16 x 1" GR5 hex flange screws (#2), and hex flange locknuts (#3).
2. Tighten nuts to the correct torque.

### Part Number & Description

**Deflector Flap**

| | |
|---|---|
| 301-483A | STB1560 Deflector Package |
| 301-484A | STB1572 Deflector Package |
| 301-485A | STB1584 Deflector Package |
| 301-486A | STB1596 Deflector Package |

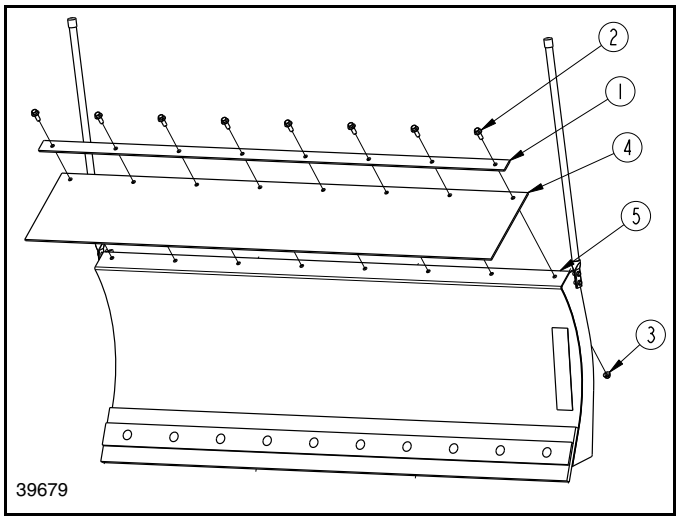


**Deflector Flap Option**
**Figure 4-2**

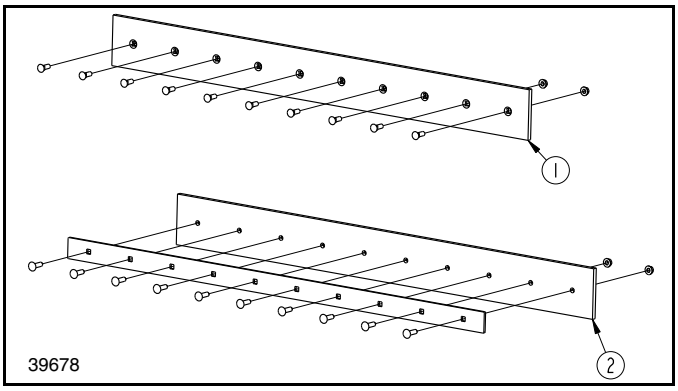


**Steel and Poly Cutting Edge Options**
**Figure 4-1**

## Tractor Hose & Coupler Options

***Refer to Figure 4-3:***

Land Pride offers two hose options for hooking up to your tractor. The 24' hose option (#1) is for connecting the front-mounted Snow Trip Blade to the hydraulic outputs on the back of your tractor. The 24' hoses come with male quick disconnect poppet couplers. The 6' tractor hose option (#2) for connecting to hydraulic outputs located on the loader arms of your tractor. With the 6' hoses you must choose a coupler option that fits your tractor's hydraulic outputs, large tractor poppet coupler option (#4) or small tractor poppet coupler option(#3).

### Part Number & Description

**Hose options**

| | |
|---|---|
| 301-506A | 24' Tractor Hose Option |
| 301-507A | 6' Tractor Hose Option |

**Coupler options (for 6' hoses)**

| | |
|---|---|
| 301-508A | Large Tractor Poppet Couplers |
| 301-509A | Small Tractor Poppet Couplers |

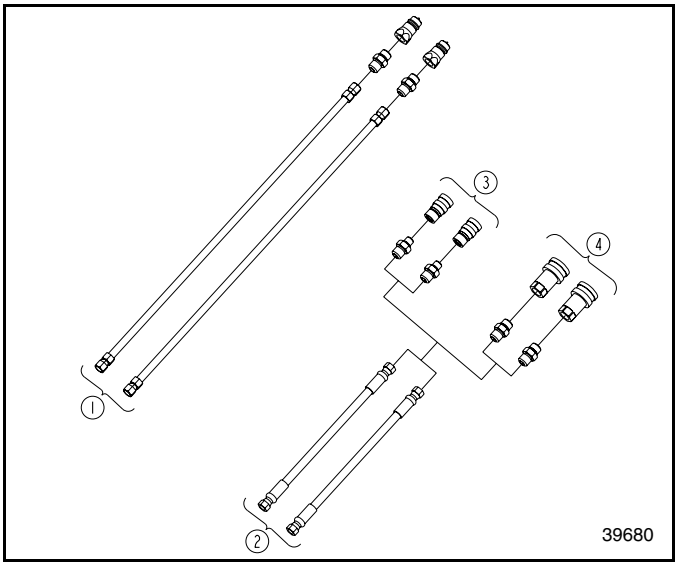


**Tractor Hose and Coupler Options**
**Figure 4-3**

## Angling Options

***Refer to Figure 4-4:***

Land Pride offers three angling options for the STB15 Series Snow Trip Blades. Each option will angle up to 30 degrees to the left and to the right helping you effectively move loads where you want them to go.

**NOTE:** The STB1596 is only offered with option 301-463A (dual cylinders with cushion valve).

### Part Number & Description

**Angling Options**

| | |
|---|---|
| 301-535A | Bent Pin Option |
| 301-463A | Dual Cylinder with Cushion Valve Option |
| 301-531A | Dual Cylinder Option |

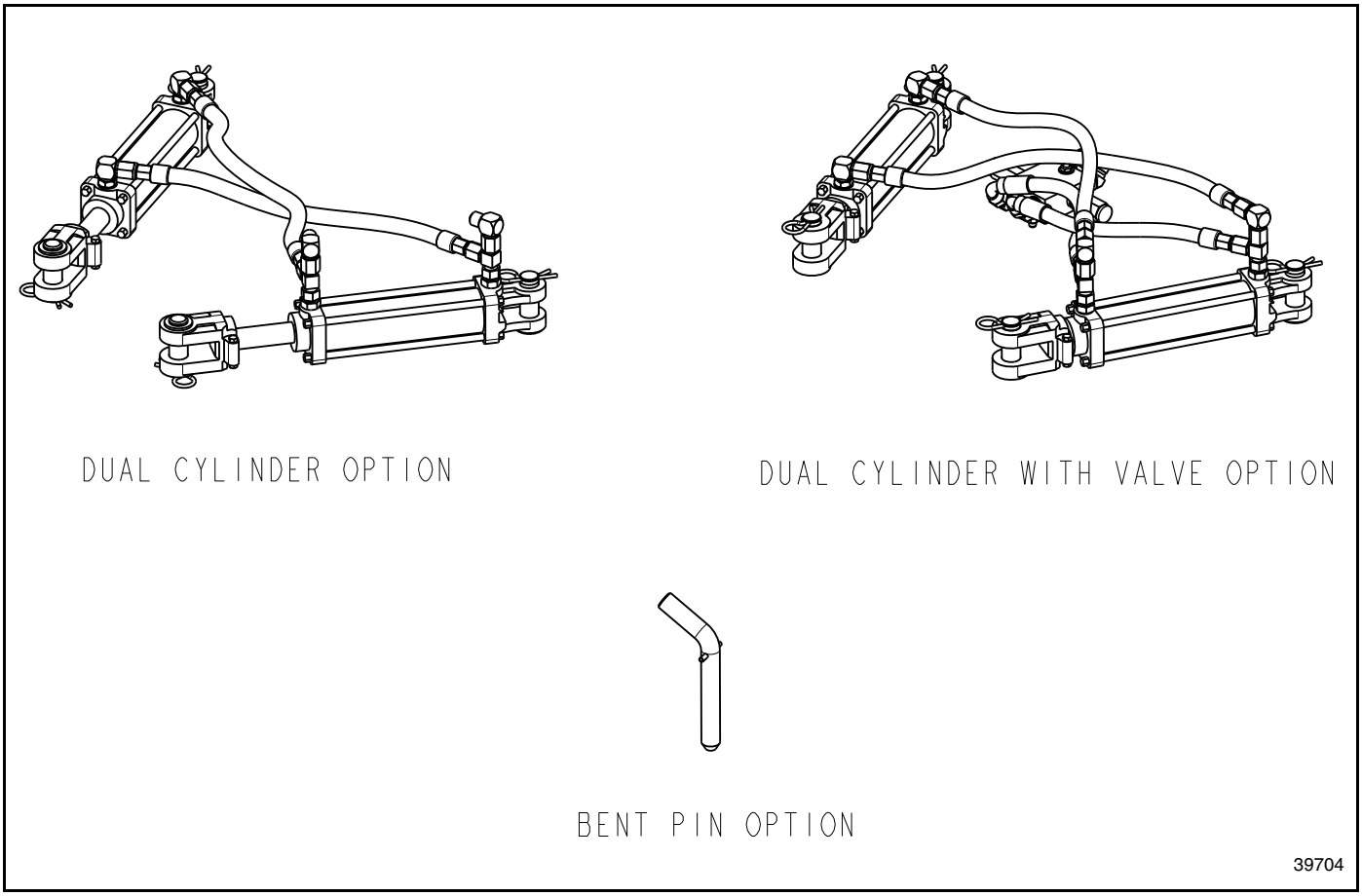


**Angling Options**
**Figure 4-4**

## General Maintenance Information

Proper servicing and adjustment are key to the long life of any attachment. With careful inspection and routine maintenance, you can avoid costly downtime and repair.

Check all bolts after using the unit for several hours to be sure they are tight. Replace any worn, damaged, or illegible safety labels by obtaining new labels from your Land Pride dealer.

## Cutting Edge Removal and Installation

**CAUTION**

*To prevent serious injury:*

*Never work under the Snow Trip Blade without properly blocking it up first. The unit can fall resulting in serious injury or death.*

### Preparation Instructions

1. Shut the tractor off. See **"Tractor Shutdown Procedure"** on page 10. Be sure to relieve all hydraulic pressure before dismounting.
2. If your cutting edge is made of steel, continue with **"Steel Cutting Edge Removal and Assembly"** below. Skip to **"Poly Cutting Edge Removal and Assembly"** on page 26 if your cutting edge is made of poly wear material.

### Steel Cutting Edge Removal and Assembly

***Refer to Figure 5-1:***

1. Remove all but the two outside plow bolts (#2) and nuts (#3) from blade (#4).
2. Loosen the two outside hex nuts (#3). Do not remove nuts at this time.
3. Hold one end of the cutting edge up and remove plow bolt (#2) from that end. Lower that end of the cutting edge down to the ground.
4. Hold opposite end of cutting edge up and remove plow bolt from that end. Lower the cutting edge to the ground.
5. Inspect plow bolts (#2) and nuts (#3) for wear. Replace as needed.
6. Inspect the cutting edge. Rotate or replace if cutting edge is excessively worn.
7. With cutting edge down, raise one end up to the moldboard and attach with plow bolt (#2) and hex nut (#3). Draw nut up snug, do not tighten.
8. Raise the other end up to the moldboard and attach with plow bolt (2#) and hex nut (#3). Draw nut up snug, do not tighten.
9. Install remaining 5/8"-11 x 1 1/2" GR5 plow bolts (#2) and nuts (#3). Tighten all nuts to the correct torque.
10. Return to the tractor. Raise unit up and remove support blocks.

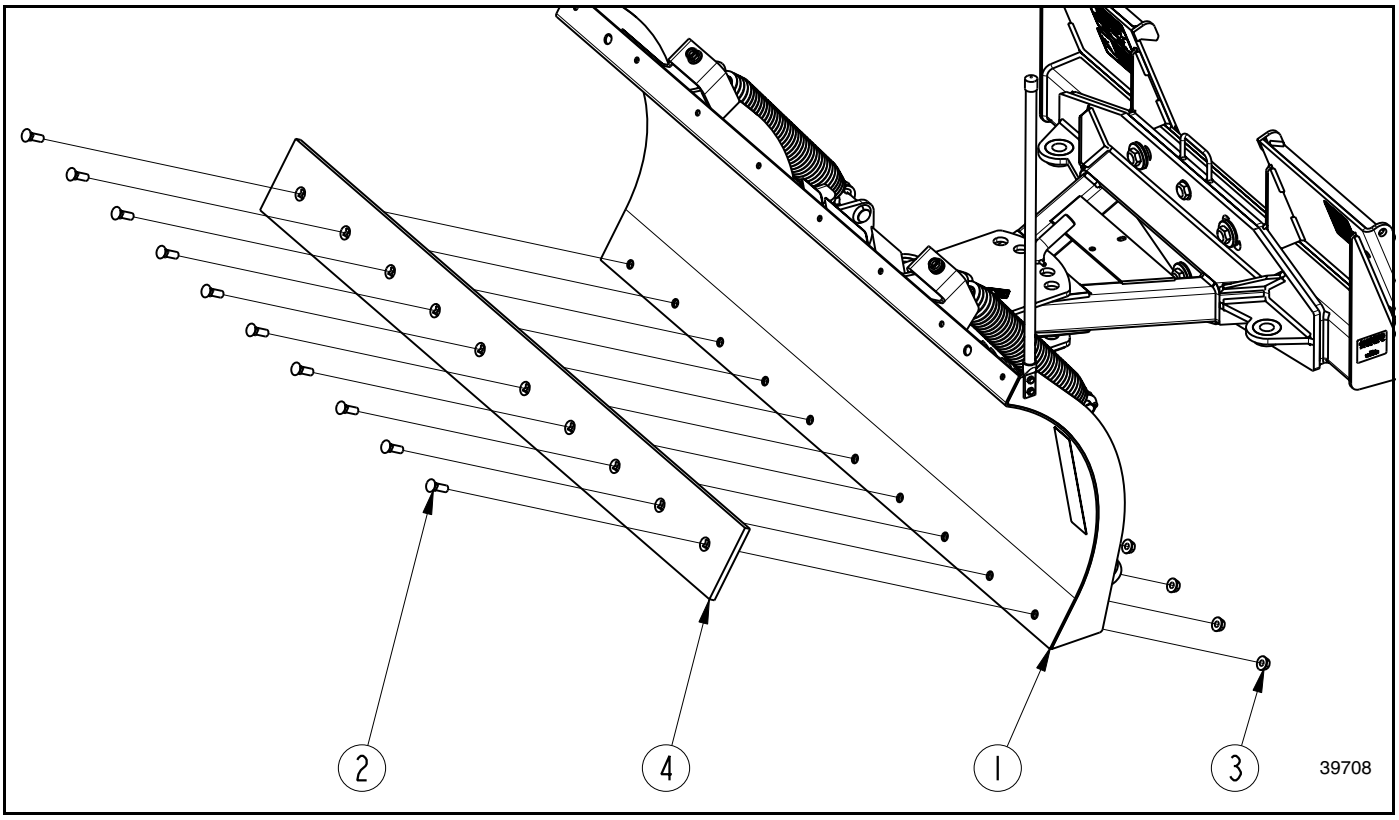


**Steel Cutting Edge Removal and Assembly**
**Figure 5-1**

## Poly Cutting Edge Removal and Assembly

***Refer to Figure 5-2:***

1. Remove all but the two outside carriage bolts (#2) and nuts (#3) from moldboard (#5).
2. Loosen the two outside hex nuts (#3). Do not remove nuts at this time.
3. Hold one end of cutting edge (#4) and retaining plate (#1) up and remove carriage bolt (#2) and nut (#3) from that end. Lower that end down to the ground.
4. Hold opposite end of cutting edge and retaining plate up and remove carriage bolt from that end. Lower cutting edge and retaining plate to ground.
5. Inspect carriage bolts (#2) and nuts (#3) for wear. Replace as needed.
6. Inspect poly cutting edge (#4). Rotate or replace cutting edge if excessively worn.
7. With cutting edge (#4) down, raise one end up and attach to moldboard with carriage bolt (#2), backing bar (#1), and hex nut (#3). Draw nut up snug, do not tighten.
8. Raise the other end up and attach to the moldboard with carriage bolt (#2), retaining plate (#1), and hex nut (#3). Draw nut up snug, do not tighten.
9. Install remaining 5/8"-11 x 1 1/2" GR5 carriage bolts (#2) and nuts (#3). Tighten all nuts to the correct torque.
10. Return to the tractor. Raise unit up and remove support blocks.

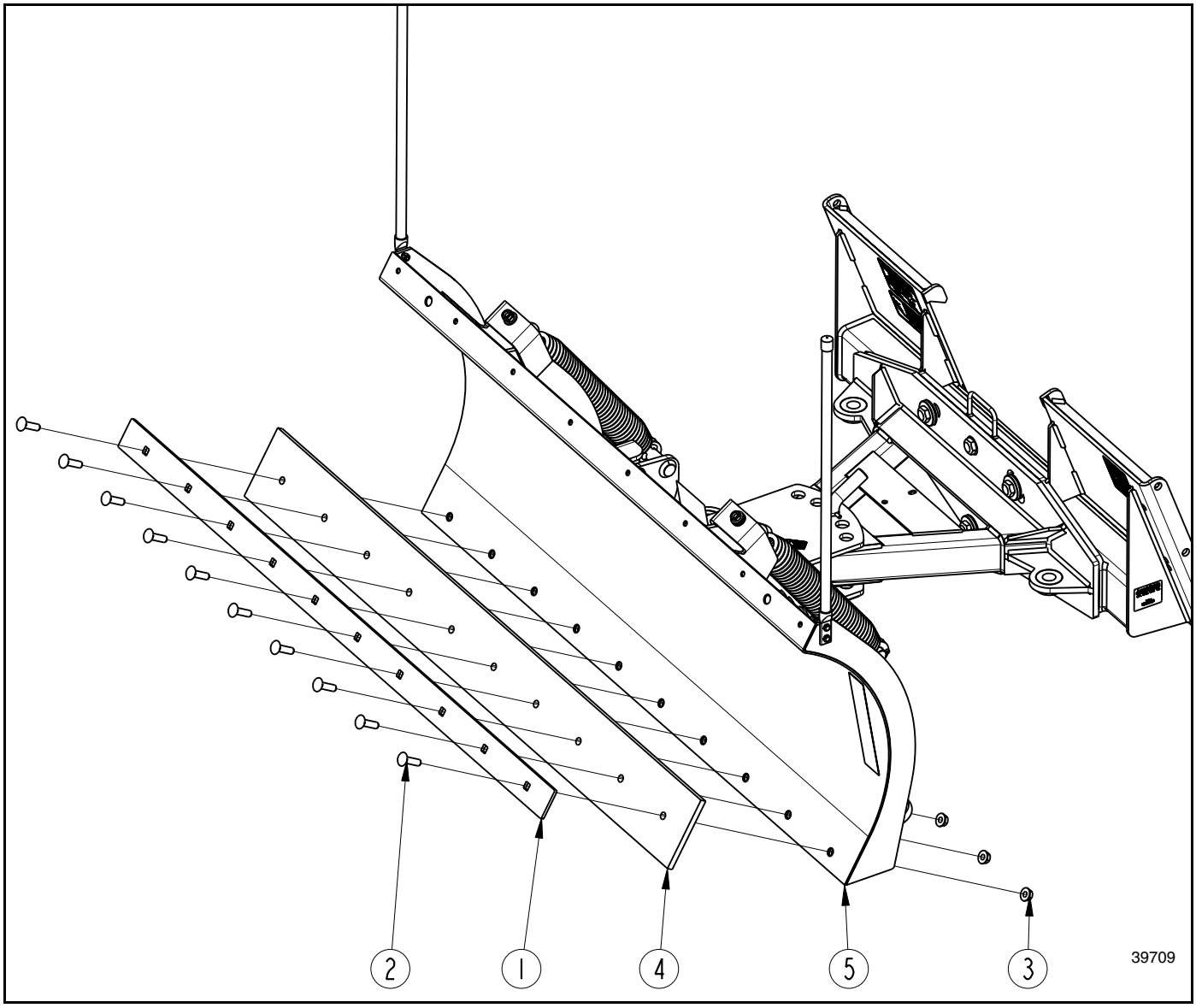


**Poly Cutting Edge Removal and Assembly**
**Figure 5-2**

## Hydraulics

**WARNING**

*To prevent serious injury or death:*

*Always secure the Snow Trip Blade with solid supports before working under it. Never work under equipment supported by hydraulics. Hydraulics can drop equipment if controls are actuated or if a hydraulic line burst. Either situation can drop equipment instantly even when power to the hydraulics is off.*

One of the most important things you can do to prevent hydraulic system problems is to ensure that your tractor's reservoir remains free of dirt and contamination. These simple maintenances will go a long way to prevent occurrence of hydraulic problems:

- Replace your tractor's hydraulic filter element at the prescribed intervals.
- Inspect tractor hydraulic oil level. Add oil if it is low.
- Use a clean cloth to wipe hose ends before attaching them to your tractor.
- Inspect quick couplers, make sure they are fully engaged. Replace couplers if they are sized wrong.
- Inspect hydraulic hoses and cylinder for oil leaks. Tighten or replace components to fix leaks.

## Long-Term Storage

Clean, inspect, service, and make necessary repairs to the attachment when storing it for long periods and at the end of the season. This will help ensure the unit is ready for field use the next time you hook-up to it

1. Remove any dirt and grease that may have accumulated on the blade and moving parts. Scrape off compacted dirt from the bottom of blade and then wash surface thoroughly with a garden hose.
2. Inspect for loose, damaged or worn parts and adjust or replace as needed.
3. Repaint parts where paint is worn or scratched to prevent rust. Ask your Land Pride dealer for aerosol touch-up paint. Paint is also available in touch-up bottles with brush, quarts, and gallon sizes by adding TU, QT, or GL to the end of the aerosol part number.

**Land Pride Aerosol Touch-up Paint**

| Part No. | Part Description |
|---|---|
| 821-070C | PAINT LP BLACK AEROSOL SPRAY CAN |

4. Replace all damaged or missing decals.
5. A coating of oil may also be applied to the lower blade area to minimize oxidation while in storage.
6. To prevent seizing, lubricate moving parts as noted in **"Lubrication Points"** starting on page 28.
7. Store blade on a level surface in a clean, dry place. Inside storage will reduce maintenance and make for a longer blade life.
8. Follow all unhooking instructions on page 22 when disconnecting tractor from blade.

## Lubrication Points

**Lubrication Legend**

Multi-purpose spray lube | Multi-purpose grease lube | Multi-purpose oil lube | 50 Hrs — Intervals in hours at which lubrication is required

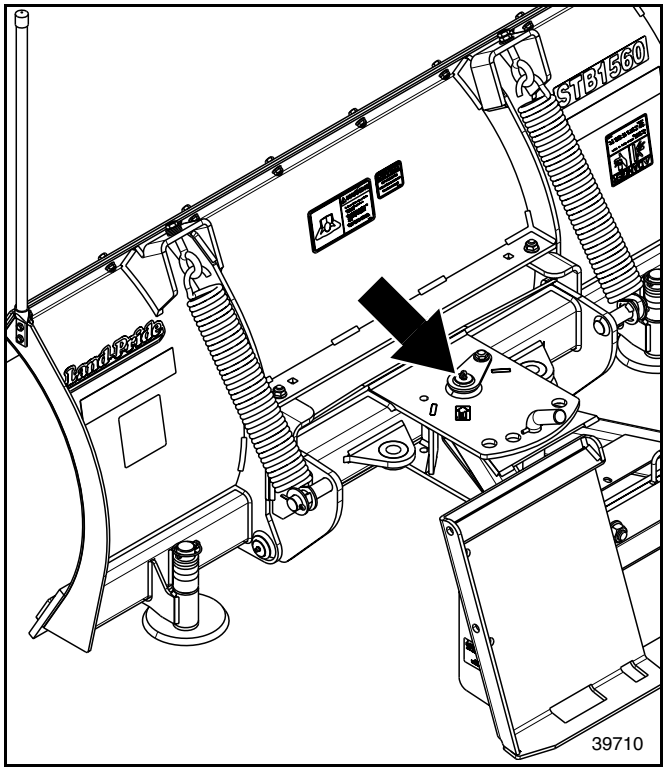


25 Hours

### Pivot Pin

1 - Zerk

Type of Lubrication: Multi-purpose grease

Quantity = 6 or more pumps (make sure grease is visible)

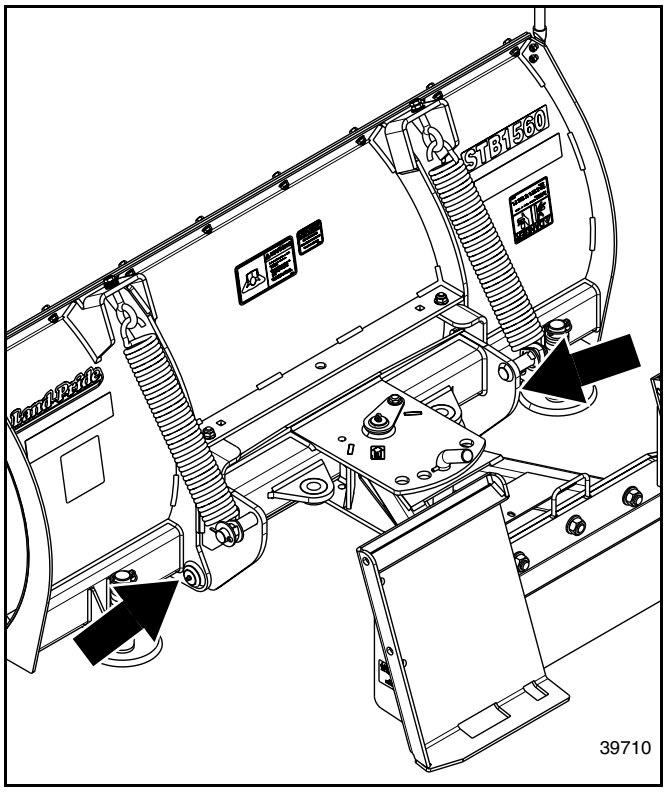


25 Hours

### Pivot Pins

2 - Zerks

Type of Lubrication: Multi-purpose grease

Quantity = 6 or more pumps (make sure grease is visible)

## STB15 Series

| List | Specifications & Capacities | | | |
|---|---|---|---|---|
| **Model Numbers** | **STB1560** | **STB1572** | **STB1584** | **STB1596** |
| **Tractor Horsepower** | 30 to 70 hp (22 to 52 kW) | | | |
| **Moldboard Thickness** | 10 Ga. (3.2 mm) | | | |
| **Blade Width (Maximum Cutting Width)** | 60" (1.5 m) | 72" (1.8 m) | 84" (2.1 m) | 96" (2.4 m) |
| **Cutting Width @ 30° Angle** | 52" (1.3 m) | 62" (1.67 m) | 73" (1.9 m) | 83" (2.1 m) |
| **Moldboard Height (With Blade)** | 27"(69 cm) | | | |
| **Maximum Blade Angle** | 30° left & 30° right | | | |
| **Angle Cylinder Size** | 2" bore x 6" stroke | | | |
| **Maximum Hydraulic Pressure** | 3000 psi (20.7 MPa) | | | |
| **Cutting Edge (Steel & Poly)** | 1/2" x 6" replaceable & reversible | | | |
| **Trip Release Pressure** | 1200 lbs (272 kg) | | | |
| **Base Unit Weights** | | | | |
| **With Steel Cutting Edge**<br>**With Poly Cutting Edge** | 539 lbs (245 kgs)<br>506 lbs (230 kgs) | 568 lbs (258 kgs)<br>528 lbs (240 kgs) | 597 lbs (271 kg)<br>550 lbs (250 kgs) | 625 lbs (284 kgs)<br>571 lbs (259 kgs) |

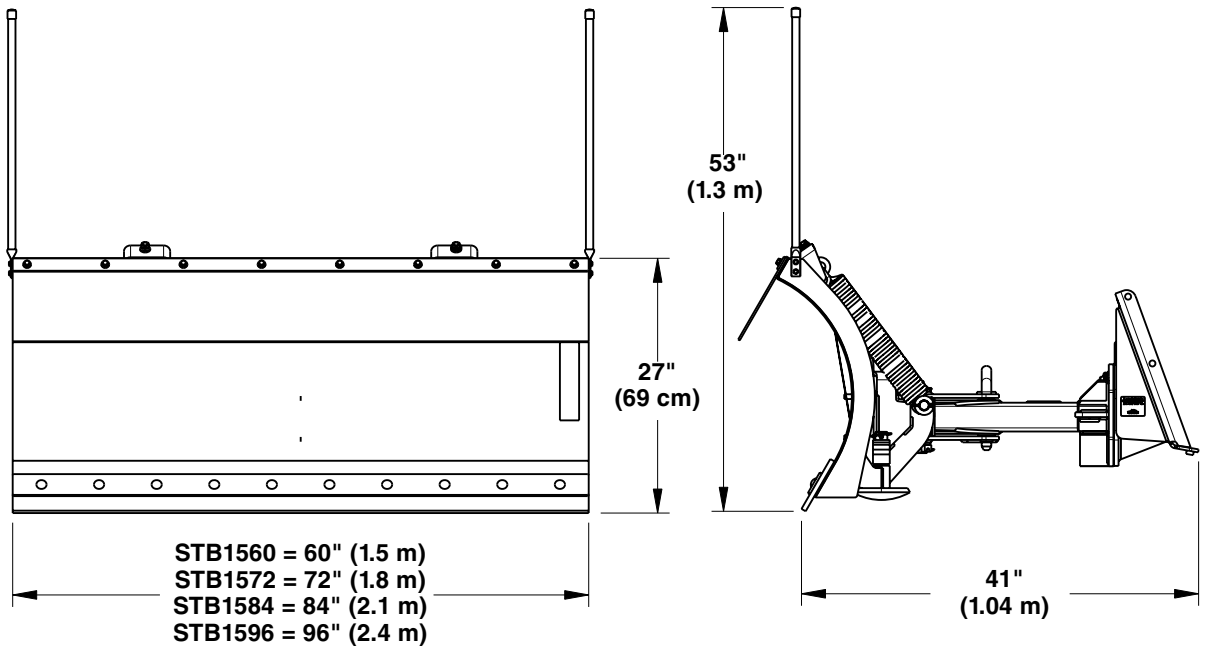


39711

## STB15 Series

| Features | Benefits |
|---|---|
| **Reinforced 10 gauge moldboard design** | Provides added strength and durability. |
| **Choice of 60" (1.5 m), 72" (1.8 m), 84" (2.1 m) or 96" (1.5 m) working widths** | Allows customers to choose the blade that meets their operational needs. |
| **Double-acting angling cylinders (dual)** | Easily enables up to 30 degrees of angling to left or right distributing the load where you want it to go. |
| **Trip design with springs** | Protects the structural integrity of the blade while still maintaining load control no matter what the bottom edge encounters. |
| **Easy-attaching mounting system** | Adapted for tractor loaders with quick-attach front mounting plates. |
| **Replaceable bottom wear edge** | Offered in steel or heavy-duty poly construction to match ground & surface operating conditions. |
| **Skid shoes** | Offered as standard equipment. Establish lower limits of blade operation to prevent surface gouging or cutting too deep. Also provides protection to the moldboard as cutting edge wears. |
| **Blade marker** | Provides operator with improved awareness and visibility of outermost edges of the blade bottom to prevent unwanted contact with ground obstacles. |
| **Optional top mounted rubber deflector** | Helps prevent snow from over-topping the moldboard in deeper snow conditions. |
| **Side float** | Allows the blade to follow the ground contour. |
| **Locking system** | Allows for light blading. |
| **Cushion valve** | Helps protect the moldboard and cylinders in the event an obstruction is hit, by allowing hydraulic fluid to bypass the cushion valve and flow back to the tractor. |

## Troubleshooting Chart

| Problem | Cause | Solution |
|---|---|---|
| **Quick connect couplings do not fit properly** | Hydraulic lines are pressurized. | Relieve hydraulic pressure. |
| | Couplings on the hydraulic hoses are the wrong size to fit power equipment couplers. | Replace hydraulic hose couplers with couplers that match power equipment couplers. |
| **Hydraulic cylinder leaks oil** | Cylinder packing is loose. | Tighten packing 1/8 of a turn. |
| | Cylinder is defective. | Repair or replace hydraulic cylinder. |
| **Hydraulic cylinder is sluggish or does not work** | Power equipment oil level is too low. | Add hydraulic oil to power equipment reservoir (Do Not Overfill). |
| | Hydraulic connection(s) leak. | Tighten or redo hydraulic connections. |
| **Hydraulic cylinder does not hold blade angle while plowing** | Release pressure is set too low. | Have the release pressure valve adjusted by a qualified mechanic. |
| **Hitch is bending** | Not running hitch parallel to the ground. | Level hitch. |
| **Hydraulic cylinder holds blade angle too rigid while plowing** | Release pressure is set too high. | Have the release pressure valve adjusted by a qualified mechanic. |
| **Moldboard angles the opposite direction expected** | Hydraulic hoses are hooked-up wrong. | Switch quick connect couplers on the hoses and reconnect to the power equipment. |
| **Low areas do not clean-up well** | Power equipment arms are not set in float mode. | Set power equipment arms to float mode. |

## Torque Values Chart for Common Bolt Sizes

| Bolt Size (inches) | Bolt Head Identification: Grade 2 | | Grade 5 | | Grade 8 | |
|---|---|---|---|---|---|---|
| in-tpi [1] | N · m [2] | ft-lb [3] | N · m | ft-lb | N · m | ft-lb |
| **1/4" - 20** | 7.4 | 5.6 | 11 | 8 | 16 | 12 |
| **1/4" - 28** | 8.5 | 6 | 13 | 10 | 18 | 14 |
| **5/16" - 18** | 15 | 11 | 24 | 17 | 33 | 25 |
| **5/16" - 24** | 17 | 13 | 26 | 19 | 37 | 27 |
| **3/8" - 16** | 27 | 20 | 42 | 31 | 59 | 44 |
| **3/8" - 24** | 31 | 22 | 47 | 35 | 67 | 49 |
| **7/16" - 14** | 43 | 32 | 67 | 49 | 95 | 70 |
| **7/16" - 20** | 49 | 36 | 75 | 55 | 105 | 78 |
| **1/2" - 13** | 66 | 49 | 105 | 76 | 145 | 105 |
| **1/2" - 20** | 75 | 55 | 115 | 85 | 165 | 120 |
| **9/16" - 12** | 95 | 70 | 150 | 110 | 210 | 155 |
| **9/16" - 18** | 105 | 79 | 165 | 120 | 235 | 170 |
| **5/8" - 11** | 130 | 97 | 205 | 150 | 285 | 210 |
| **5/8" - 18** | 150 | 110 | 230 | 170 | 325 | 240 |
| **3/4" - 10** | 235 | 170 | 360 | 265 | 510 | 375 |
| **3/4" - 16** | 260 | 190 | 405 | 295 | 570 | 420 |
| **7/8" - 9** | 225 | 165 | 585 | 430 | 820 | 605 |
| **7/8" - 14** | 250 | 185 | 640 | 475 | 905 | 670 |
| **1" - 8** | 340 | 250 | 875 | 645 | 1230 | 910 |
| **1" - 12** | 370 | 275 | 955 | 705 | 1350 | 995 |
| **1-1/8" - 7** | 480 | 355 | 1080 | 795 | 1750 | 1290 |
| **1-1/8" - 12** | 540 | 395 | 1210 | 890 | 1960 | 1440 |
| **1-1/4" - 7** | 680 | 500 | 1520 | 1120 | 2460 | 1820 |
| **1-1/4" - 12** | 750 | 555 | 1680 | 1240 | 2730 | 2010 |
| **1-3/8" - 6** | 890 | 655 | 1990 | 1470 | 3230 | 2380 |
| **1-3/8" - 12** | 1010 | 745 | 2270 | 1670 | 3680 | 2710 |
| **1-1/2" - 6** | 1180 | 870 | 2640 | 1950 | 4290 | 3160 |
| **1-1/2" - 12** | 1330 | 980 | 2970 | 2190 | 4820 | 3560 |

| Bolt Size (Metric) | Bolt Head Identification: Class 5.8 | | Class 8.8 | | Class 10.9 | |
|---|---|---|---|---|---|---|
| mm x pitch [4] | N · m | ft-lb | N · m | ft-lb | N · m | ft-lb |
| **M 5 X 0.8** | 4 | 3 | 6 | 5 | 9 | 7 |
| **M 6 X 1** | 7 | 5 | 11 | 8 | 15 | 11 |
| **M 8 X 1.25** | 17 | 12 | 26 | 19 | 36 | 27 |
| **M 8 X 1** | 18 | 13 | 28 | 21 | 39 | 29 |
| **M10 X 1.5** | 33 | 24 | 52 | 39 | 72 | 53 |
| **M10 X 0.75** | 39 | 29 | 61 | 45 | 85 | 62 |
| **M12 X 1.75** | 58 | 42 | 91 | 67 | 125 | 93 |
| **M12 X 1.5** | 60 | 44 | 95 | 70 | 130 | 97 |
| **M12 X 1** | 90 | 66 | 105 | 77 | 145 | 105 |
| **M14 X 2** | 92 | 68 | 145 | 105 | 200 | 150 |
| **M14 X 1.5** | 99 | 73 | 155 | 115 | 215 | 160 |
| **M16 X 2** | 145 | 105 | 225 | 165 | 315 | 230 |
| **M16 X 1.5** | 155 | 115 | 240 | 180 | 335 | 245 |
| **M18 X 2.5** | 195 | 145 | 310 | 230 | 405 | 300 |
| **M18 X 1.5** | 220 | 165 | 350 | 260 | 485 | 355 |
| **M20 X 2.5** | 280 | 205 | 440 | 325 | 610 | 450 |
| **M20 X 1.5** | 310 | 230 | 650 | 480 | 900 | 665 |
| **M24 X 3** | 480 | 355 | 760 | 560 | 1050 | 780 |
| **M24 X 2** | 525 | 390 | 830 | 610 | 1150 | 845 |
| **M30 X 3.5** | 960 | 705 | 1510 | 1120 | 2100 | 1550 |
| **M30 X 2** | 1060 | 785 | 1680 | 1240 | 2320 | 1710 |
| **M36 X 3.5** | 1730 | 1270 | 2650 | 1950 | 3660 | 2700 |
| **M36 X 2** | 1880 | 1380 | 2960 | 2190 | 4100 | 3220 |

[1] in-tpi = nominal thread diameter in inches-threads per inch

[2] N· m = newton-meters

[3] ft-lb= foot pounds

[4] mm x pitch = nominal thread diameter in millimeters x thread pitch

Torque tolerance + 0%, -15% of torquing values. Unless otherwise specified use torque values listed above.
All locknuts or lubricated fasteners: Use 75% of torque value. (i.e. 1/2"-13 GR5 = 76 ft-lb; 75% of 76 or .75 x 76 = 57 ft-lb)

# Warranty

**Land Pride** warrants to the original purchaser that this Land Pride product will be free from defects in material and workmanship beginning on the date of purchase by the end user according to the following schedule when used as intended and under normal service and conditions for personal use.

**Overall Unit:** One year Parts and Labor

**Hydraulic Cylinder:** One year Parts and Labor

**Cutting Edge:** Considered wear items

This Warranty is limited to the repair or replacement of any defective part by Land Pride and the installation by the dealer of any such replacement part, and does not cover common wear items. Land Pride reserves the right to inspect any equipment or parts which are claimed to have been defective in material or workmanship.

This Warranty does not apply to any part or product which in Land Pride's judgment shall have been misused or damaged by accident or lack of normal maintenance or care, or which has been repaired or altered in a way which adversely affects its performance or reliability, or which has been used for a purpose for which the product is not designed. Misuse also specifically includes failure to properly maintain oil levels, grease points, and driveline shafts.

Claims under this Warranty should be made to the dealer which originally sold the product and all warranty adjustments must be made through an authorized Land Pride dealer. Land Pride reserves the right to make changes in materials or design of the product at any time without notice.

This Warranty shall not be interpreted to render Land Pride liable for damages of any kind, direct, consequential, or contingent to property. Furthermore, Land Pride shall not be liable for damages resulting from any cause beyond its reasonable control. This Warranty does not extend to loss of crops, any expense or loss for labor, supplies, rental machinery or for any other reason.

**No other warranty of any kind whatsoever, express or implied, is made with respect to this sale; and all implied warranties of merchantability and fitness for a particular purpose which exceed the obligations set forth in this written warranty are hereby disclaimed and excluded from this sale.**

This Warranty is not valid unless registered with Land Pride within 30 days from the date of purchase.

**IMPORTANT:** The Online Warranty Registration should be completed by the dealer at the time of purchase. This information is necessary to provide you with quality customer service.

**Model Number** _____ **Serial Number** _____

Corporate Office: P.O. Box 5060
Salina, Kansas 67402-5060 USA
www.landpride.com